PRECAST RCB CONSTRUCTION NOTES

DESIGN SPECIFICATIONS: AASHTO "Standard Specifications for Highway Bridges" and "Interim Specifications Bridges 1992. Use the following:

Condition	Min. Cover	AASHTO	Equiv. ASTM
2 ft. or more cover	2 ft.	M259, Table 2	C789, Table 2

The Specifications noted above show concrete dimensions, reinforcing placement, earth cover, and other details needed to manufacture the box culverts.

CONSTRUCTION SPECIFICATIONS: "Uniform Standard Specifications for Public Works Construction Off-Site Improvements, Clark County Area, Nevada", and State of Nevada Standard Plans for Road and Bridge Construction dated July 1995 page B-9 B-20.1.8-(502).

LIVE LOADS: Interstate loading conditions (Table 2). (Standard HS20-44 and FHWA alternate loading.)

CONCRETE: All concrete shall be Class AA or Class DA modified, with a 28-day compressive strength of 5000 p.s.i. For an approved "dry cast" manufacturing process, the air entraining and slump requirements may be disregarded.

REINFORCING STEEL: All reinforcing steel to be ASTM A 615 Grade 60. Welded wire fabric shall conform to ASTM A815, smooth wire, or ASTM A497, deformed wire. Precast RCB units planned for connection to cast-in-place structures shall be fabricated with #4 reinforcement bars spaced at 12" O.C. and embedded 18" into the pre-cast section and extending 18" into the cast-in-place sections.

WEEP HOLES: 3"-sch 40 PVC with drain grates glued on backface of each weephole. Each weephole will be covered with 1-cubic foot of 2-inch drain rock wrapped with filter fabric and centered in each section.

JOINT MATERIAL: joint material shall be a preformed joint material meeting AASHTO specifications M198 type B. The material shall be installed in accordance with the manufacturer's recommendations. A double application of joint material shall be used. One application shall be applied to the tongue and the other to the groove. The min. size of joint material shall be 1-1/4 inches

Abutting pre-cast 12'x8' box sections will have a maximum of 3-inches space between them filled with grout as per State of Nevada Standard Plans.

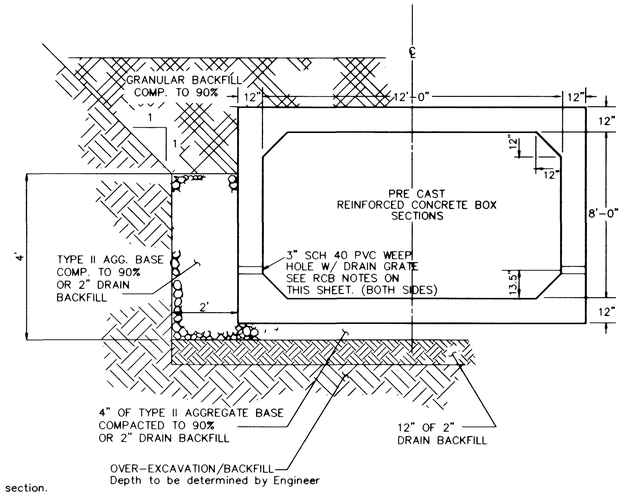

PRECAST 12'X8' RCB (A)

NTS

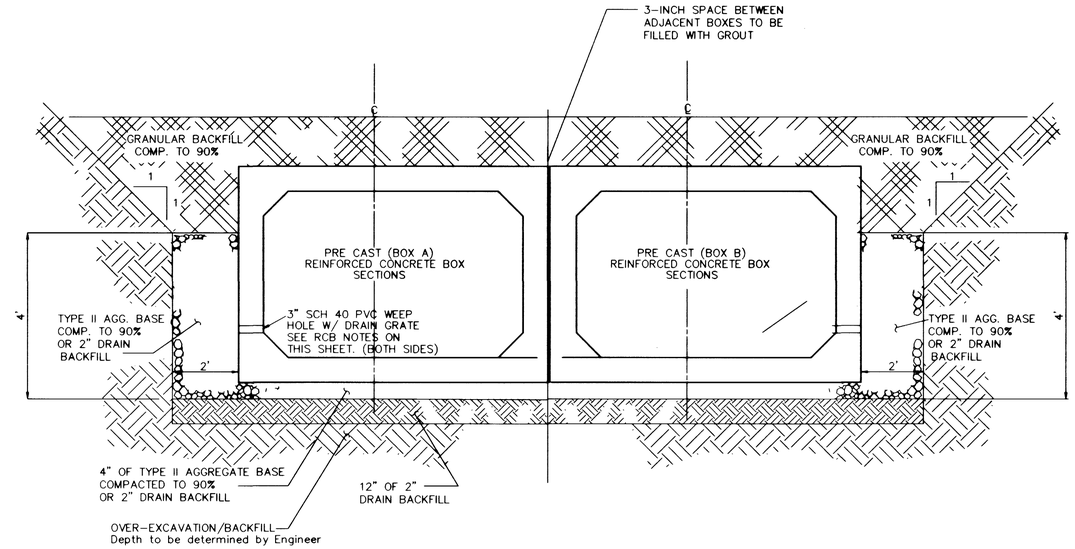

PRECAST 12'X8' RCB (C)

NTS

STATION 132+50 TO STATION 133+00

RCB CONSTRUCTION NOTES

DESIGN SPECIFICATIONS: AASHTO "Standard Specifications for Highway Bridges 1983" and "Interim Specifications Bridges 1992".

CONSTRUCTION SPECIFICATIONS: "Uniform Standard Specifications for Public Works Construction Off-Site Improvements, Clark County Area, Nevada", except as noted in the Special Provisions for this Contract.

LIVE LOADS: Standard HS 20-44 Loading.

CONCRETE: All concrete to be Class DA-Modified, Type V (6.5 sack minimum, 0.45 water/cement ratio), with a twenty-eight (28) day compressive strength of 4,000 P.S.I.

REINFORCING STEEL: All reinforcing steel to be ASTM A 615 Grade 60. Bottom slab reinforcement shall have three inch (3") clearance. All other reinforcement shall have a two inch (2") clearance unless otherwise noted on the plans.

WEEP HOLES: Install 3" schedule 40 PVC weepholes @ 10'-0" o.c. with drain grate with 1/4"(max) slots firmly glued with pvc apoxy to the backface of each weephole along the exterior walls. Weepholes in floor slab shall be 20'o.c. staggered, see "FLOOR SLAB WEEPHOLE" detail on this sheet. All weepholes will be covered with one cubic foot of drain backfill wrapped in filter fabric.

JOINTS:
Invert - No expansion joints are permitted
Roof and Walls - Place weakened plane joints at 30' centers. See detail, this page.

ROUGHNESS: Between stations 150+00 and 155+60, the roughness of the wall and floor slabs of the pre-cast box sections will be increased by installing corrugations by the detail " ROUGHNESS CORRUGATIONS" as shown below:

NOTES: 1. TO BE FORMED IN RCB WALL AND AND FLOOR SLABS
2. ALTERNATE ROUGHNESS CORRUGATIONS MAY BE USED BY CONTRACTOR. IN SUCH CASE, THE ROUGHNESS FACTOR "n" MUST BE BETWEEN 0.22 AND 0.26 AND MUST BE APPROVED BY THE ENGINEER PRIOR TO CONSTRUCTION.

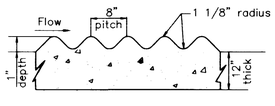

ROUGHNESS CORRUGATIONS

NTS

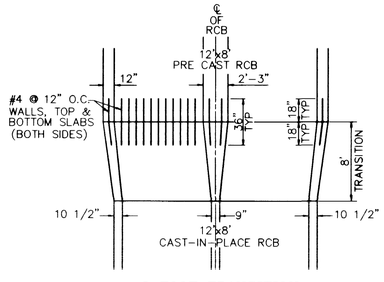

8 FOOT TRANSITION FROM CAST-IN-PLACE TO PRECAST

NTS

Notes: The reinforcement for the 8 foot transition will be same as the cast-in-place double 12' x 8' RCB except the trus bars and lateral #4 bars in the bottom slab and deck will be replace with straight bars of #6 bars at 18-inches o.c. alternating with #7 bars at 8-inches o.c. in both mats.

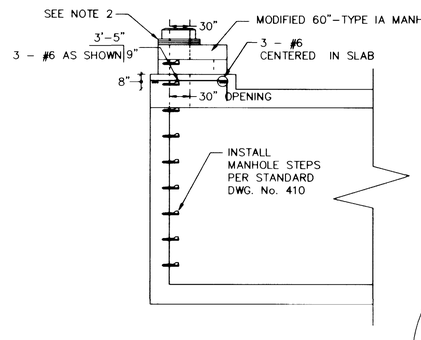

SECTION FOR LESS THAN 6-FOOT

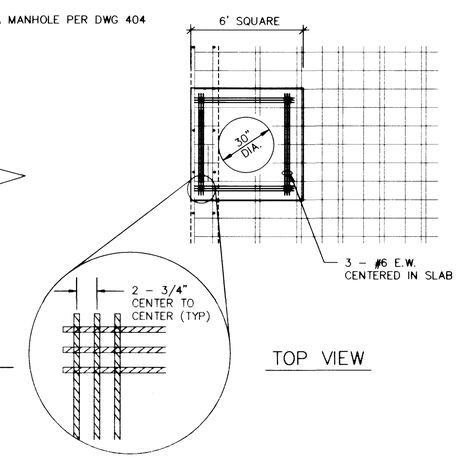

TOP VIEW

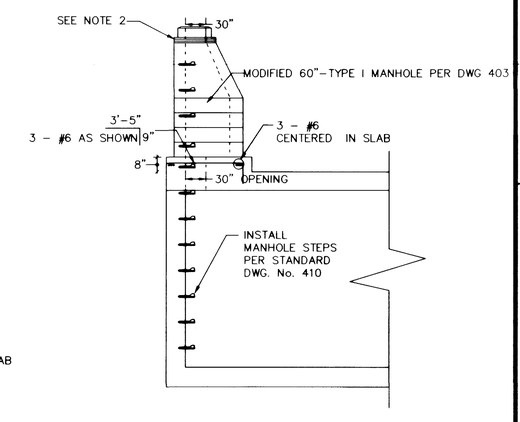

SECTION FOR 6-FOOT OR GREATER

NOTES:
1. ALL RCB MANHOLES ARE TO BE CONSTRUCTED ADJACENT TO THE RCB WALL
2. INSTALL STANDARD MANHOLE RINGS TO FINISHED GRADE AND INSTALL STANDARD MANHOLE RING AND COVER PER USD #409
3. INSTALL MANHOLE COVER AND RING WITH A 30-INCH OPENING.

RCB MANHOLE (B)

NTS

REVISIONS

No.	Date		CHED	APPD

RECORD DRAWINGS

DESIGNED: GRB/GKC
DRAWN: JL/RP
CHECKED: LHC
JOB No: 661-95
HORIZ: AS NOTED
VERT: AS NOTED
DATE: 12/01/98

Carter Burgess
Consultants in Engineering, Planning and the Environment
2955 East Sunset Road, Suite 105
Las Vegas, NV 89120
(702) 798-1007 Fax (702) 798-7056

PROJECT: CITY OF LAS VEGAS UPPER WASHINGTON AVENUE CONVEYANCE SYSTEM

DESCRIPTION: PHASE 1 RCB AND MANHOLE DETAILS PROJECT NO. 98.1730.21-RC

DRAWING NO. 731-54E

SHEET SD1

12 OF 35

D:\PHASE1\661-SD1.DWG Thu Dec 09 13:57:10 1999

20098

PRECAST RCB CONSTRUCTION NOTES

Quantities	Min. Cement	AASHTO	Grade AASHTO
3 ft. or less	5 sk	[illegible]	[illegible]

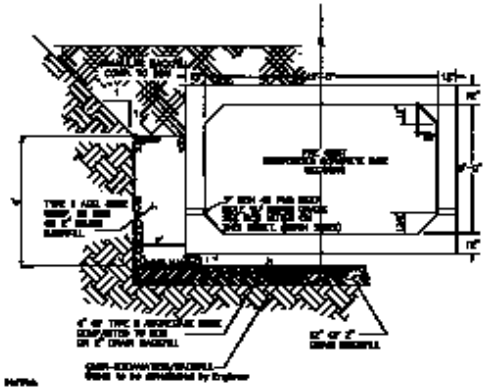

PRECAST 12'X8' RCB (A)

NTS

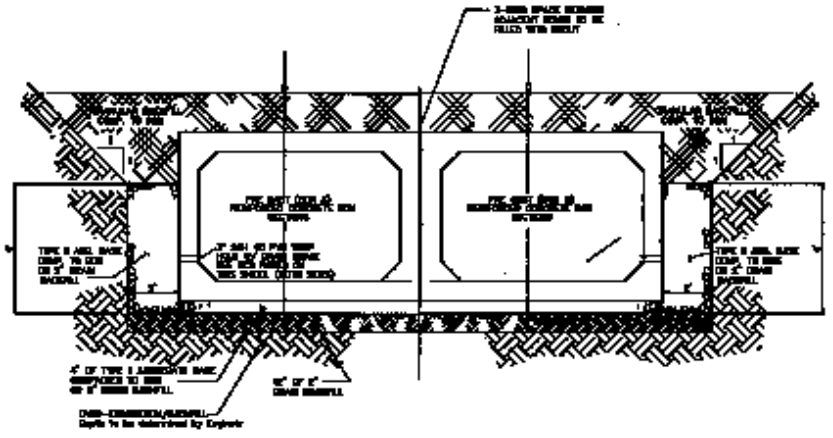

PRECAST 12'X8' RCB NTS (C)

STATION 132+50 TO STATION 133+00

RCB CONSTRUCTION NOTES

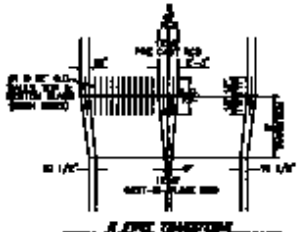

ROUGHNESS CORRUGATIONS

NTS

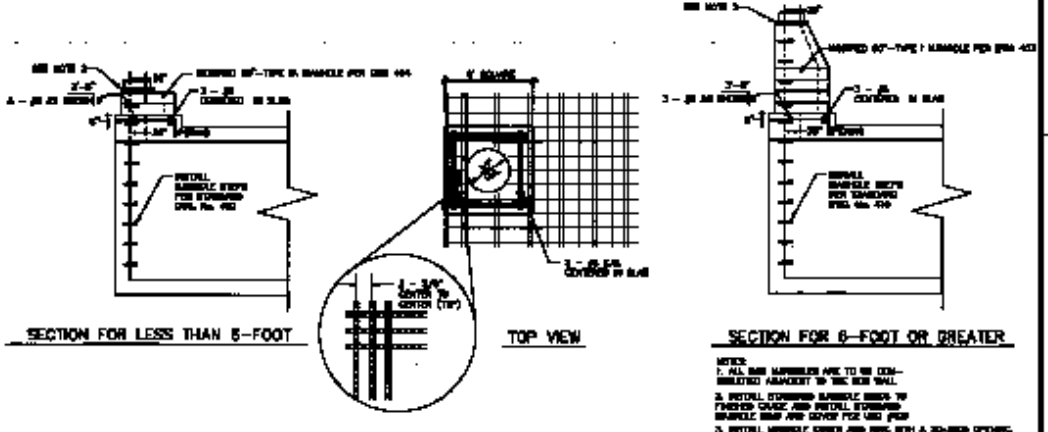

RCB MANHOLE (B)

NTS

REVISIONS		
No.	Date	

CITY OF LAS VEGAS

DEPARTMENT OF PUBLIC WORKS

RCB AND MANHOLE DETAILS

PROJECT NO. PB.1730.01-RC

731-64E

SD1

12 of 38