NOTES:

1. SEE CIVIL PLANS BY SLATER HANIFAN GROUP (PROJECT NO. PAR0302-007) FOR ELEVATIONS AND STATIONS.
2. SEE S-1 FOR GENERAL STRUCTURAL NOTES.

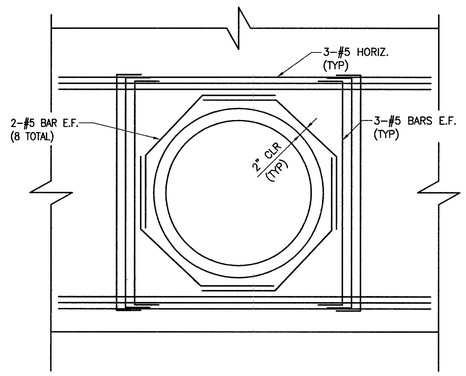

2 TYPICAL PIPE PENETRATION
SCALE: 1/2"=1'-0"

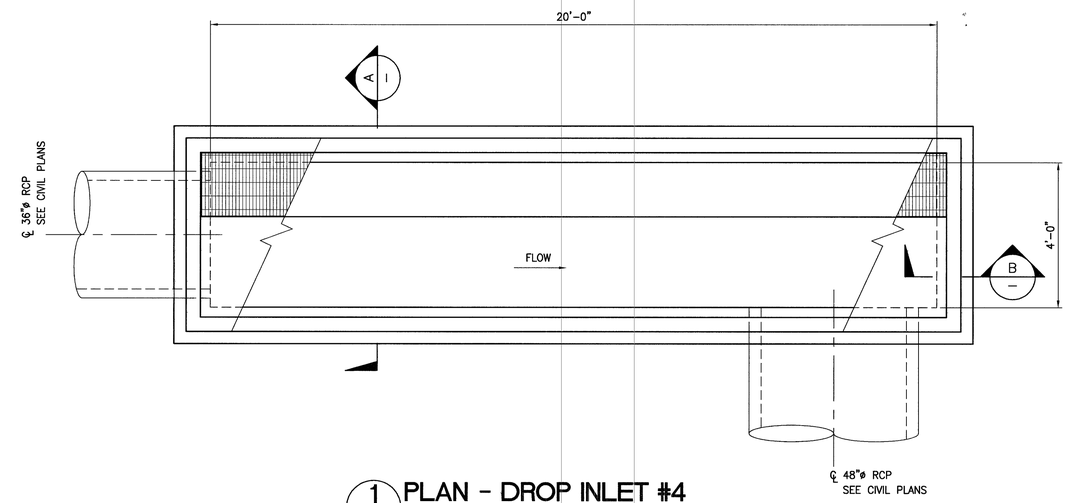

1 PLAN - DROP INLET #4
SCALE: 1/2"=1'-0"

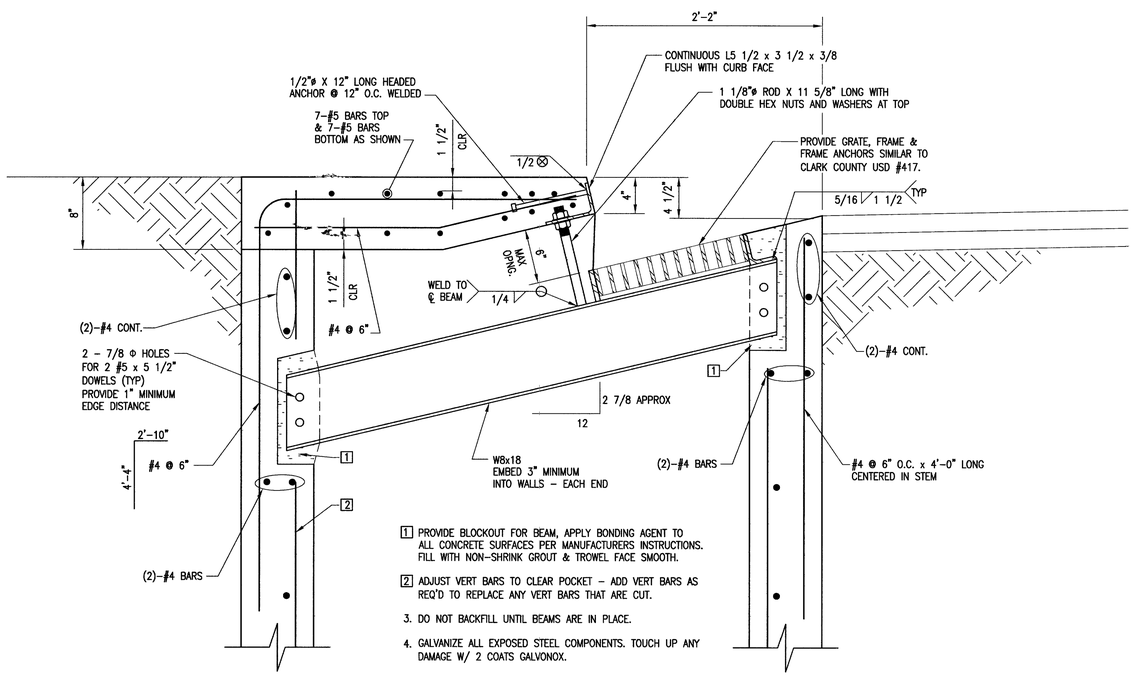

1 PROVIDE BLOCKOUT FOR BEAM, APPLY BONDING AGENT TO ALL CONCRETE SURFACES PER MANUFACTURERS INSTRUCTIONS. FILL WITH NON-SHRINK GROUT & TROWEL FACE SMOOTH.

2 ADJUST VERT BARS TO CLEAR POCKET - ADD VERT BARS AS REQ'D TO REPLACE ANY VERT BARS THAT ARE CUT.

3. DO NOT BACKFILL UNTIL BEAMS ARE IN PLACE.

4. GALVANIZE ALL EXPOSED STEEL COMPONENTS. TOUCH UP ANY DAMAGE W/ 2 COATS GALVONOX.

C SECTION
SCALE: 1 1/2"=1'-0"

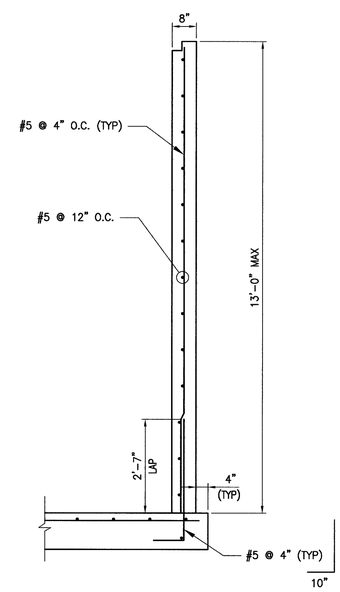

B SECTION
SCALE: 1/2"=1'-0"

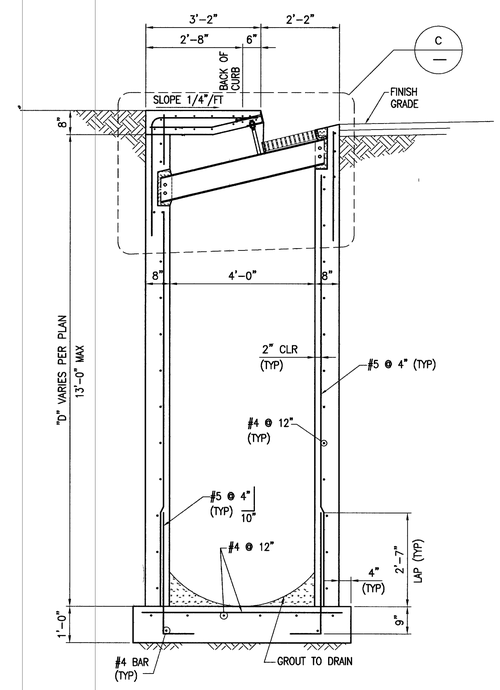

A SECTION
SCALE: 1/2"=1'-0"

9/178

REV	DATE	DESCRIPTION	DATE	AGEN. APP	DATE	GOV. APP.	DATE
0	7MAR06	ORIGINAL SUBMITTAL					

DESIGN: DAT
DRAWN: DAT
CHECK: PKH
ISSUE DATE:
ISSUE EDITOR:
PLOT DATE: 03-08-06
PLOT TIME: 15:26:25

ISSUE DATE: % COMPLETE

G.C. WALLACE, INC.
Engineers/Planners/Surveyors
1555 SOUTH RAINBOW BLVD./LAS VEGAS, NEVADA 89146
TELEPHONE: (702) 804-2000 • FAX: (702) 804-2399
dturner

G:\787-054\DWG\Struct\054-S003.dwg

PARDEE HOMES OF NEVADA
TOWN CENTER 60/75 NO. 5
DROP INLET DETAILS

DRAWING
S-3
25 OF 25 SHTS