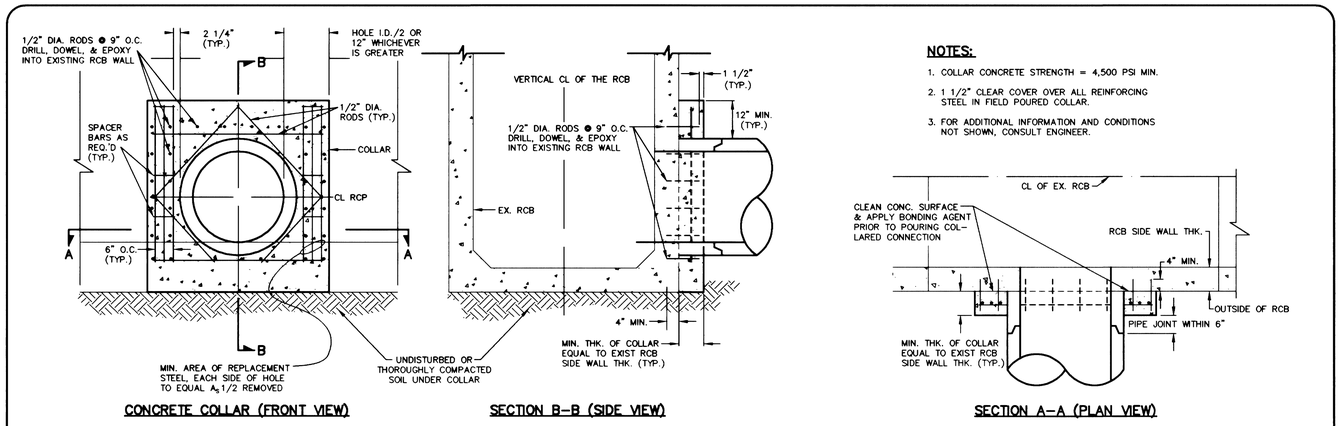

CONCRETE COLLAR (FRONT VIEW)

SECTION B–B (SIDE VIEW)

SECTION A–A (PLAN VIEW)

NOTES:

1. COLLAR CONCRETE STRENGTH = 4,500 PSI MIN.
2. 1 1/2" CLEAR COVER OVER ALL REINFORCING STEEL IN FIELD POURED COLLAR.
3. FOR ADDITIONAL INFORMATION AND CONDITIONS NOT SHOWN, CONSULT ENGINEER.

REINFORCED CONCRETE COLLAR (8 / –)

SCALE: NO SCALE

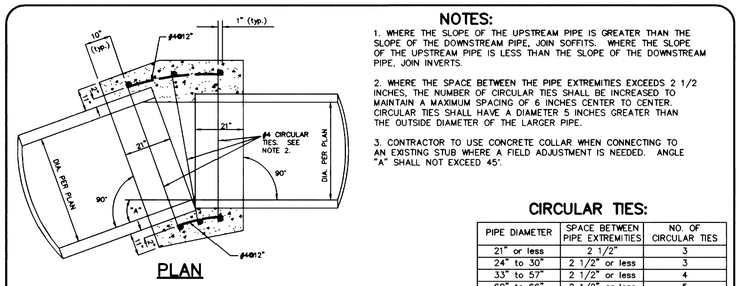

PLAN

NOTES:

1. WHERE THE SLOPE OF THE UPSTREAM PIPE IS GREATER THAN THE SLOPE OF THE DOWNSTREAM PIPE, JOIN SOFFITS. WHERE THE SLOPE OF THE UPSTREAM PIPE IS LESS THAN THE SLOPE OF THE DOWNSTREAM PIPE, JOIN INVERTS.
2. WHERE THE SPACE BETWEEN THE PIPE EXTREMITIES EXCEEDS 2 1/2 INCHES, THE NUMBER OF CIRCULAR TIES SHALL BE INCREASED TO MAINTAIN A MAXIMUM SPACING OF 6 INCHES CENTER TO CENTER. CIRCULAR TIES SHALL HAVE A DIAMETER 5 INCHES GREATER THAN THE OUTSIDE DIAMETER OF THE LARGER PIPE.
3. CONTRACTOR TO USE CONCRETE COLLAR WHEN CONNECTING TO AN EXISTING STUB WHERE A FIELD ADJUSTMENT IS NEEDED. ANGLE "A" SHALL NOT EXCEED 45°.

CIRCULAR TIES:

PIPE DIAMETER	SPACE BETWEEN PIPE EXTREMITIES	NO. OF CIRCULAR TIES
21" or less	2 1/2"	3
24" to 30"	2 1/2" or less	3
33" to 57"	2 1/2" or less	4
60" to 66"	2 1/2" or less	5

CONCRETE COLLAR DETAIL (3 / –)

SCALE: N.T.S.

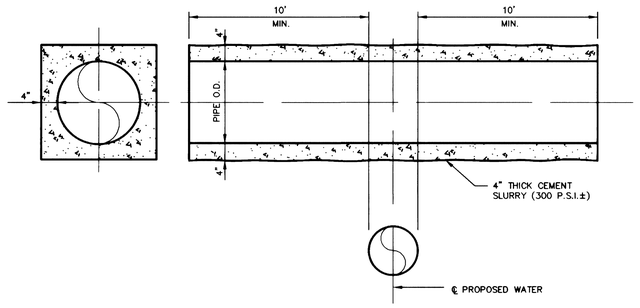

ENCASEMENT DETAIL (2 / –)

SCALE: N.T.S.

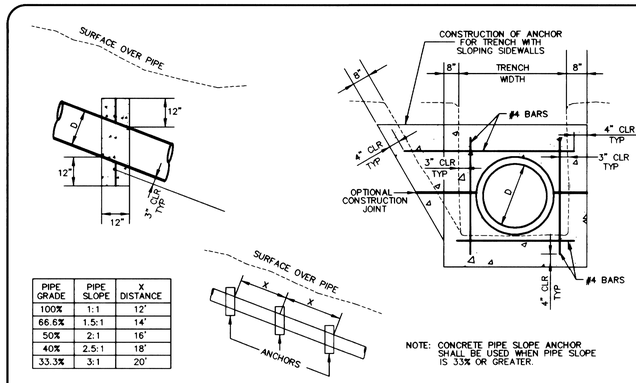

PIPE GRADE	PIPE SLOPE	X DISTANCE
100%	1:1	12'
66.6%	1.5:1	14'
50%	2:1	16'
40%	2.5:1	18'
33.3%	3:1	20'

NOTE: CONCRETE PIPE SLOPE ANCHOR SHALL BE USED WHEN PIPE SLOPE IS 33% OR GREATER.

CONCRETE PIPE SLOPE ANCHOR (7 / –)

SCALE: NO SCALE

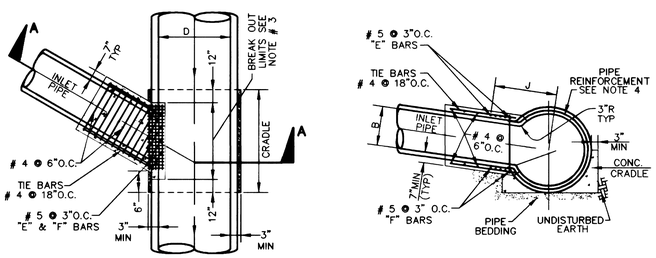

PLAN

SECTION A–A

NOTES:

1. PIPE CONNECTION DETAIL #2 IS TO BE USED WHEN O.D. OF B IS GREATER THAN 1/2 THE I.D. OF "D" OR B IS GREATER THAN 24". B SHALL NOT EXCEED 3/4D, OR 42". NO MORE THAN ONE OPENING SHALL BE MADE IN ONE SECTION OF PIPE.
2. VALUES OF B AND D ARE SHOWN ON PLANS.
3. BREAKOUT LIMITS SHAL BE DETERMINED AS FOLLOWS:
   UPSTREAM LIMIT – AT THE INTERSECTION OF THE OUTSIDE OF THE INLET WALL WITH THE MAIN LINE PIPE WALL
   DOWNSTREAM LIMIT – 6" DOWNSTREAM OF THE INTERSECTION OF THE INLET WALL WITH THE MAIN LINE PIPE WALL
   THE OPENING SHALL BE RECTANGULAR, CUT NORMAL TO PIPE SURFACE AND WITHOUT DAMAGING REINFORCING STEEL. IF A JOINT IN THE MAIN LINE PIPE FALLS WITHIN THE LIMITS OF THE CONCRETE CRADDLE, PROVIDE A CONDRETE ENCASEMENT ON FOOT ABOVE THE TOP OF THE MAIN LINE PIPE TO THE LIMITS OF THE CRADLE.
4. CUT TRANSVERSE REINFORCEMENT IN THE PIPE AT CENTER OF OPENING AND BEND INTO TOP AND BOTTOM SLABS CONCRETE OF INLET.
5. PLACE REINFORCING STEEL 1 1/2" CLEAR FROM THE FACE OF CONCRETE.
6. EXTEND E AND F BARS TO A POINT NOT LESS THAN J DISTANCE FROM CENTERLINE. J = 7/12D + 6".

PIPE CONNECTION DETAIL (6 / –)

SCALE: NO SCALE

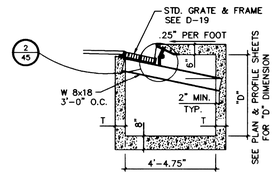

SECTION D

NOTE:

REINFORCEMENT PER STD. "DROP INLET TYPE "C"".

"T" TABLE	
"D"	"T"
2'-0" TO 8'-0"	6"
8'-1" TO 20'-0"	8"

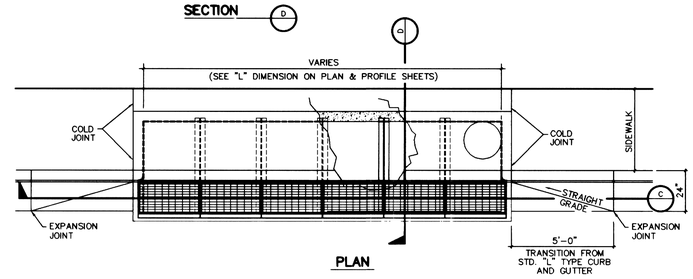

PLAN

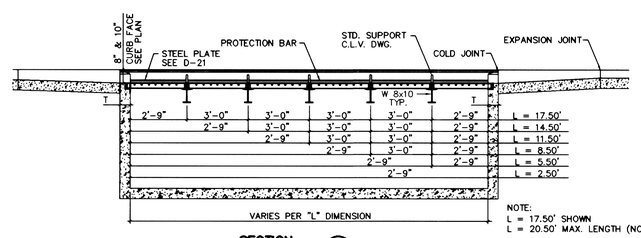

NOTE:
L = 17.50' SHOWN
L = 20.50' MAX. LENGTH (NOT SHOWN)

SECTION C

MODIFIED TYPE "C" DROP INLET (1 / –)

SCALE: N.T.S.

APPROVAL:

Nan Hallo — 1/31/02

LAS VEGAS VALLEY WATER DISTRICT — DATE

REV	DATE	DESCRIPTION	DATE AGEN. APP	DATE GCW APP

DESIGN: JJ
DRAWN: JJ
CHECK: BAH
ISSUE DATE:
ISSUE EDITOR:
PLOT DATE: 01-29-02
PLOT TIME: 11:27:17
Jjohnson

G. C. WALLACE, INC.
Engineering/Architecture
1555 SOUTH RAINBOW BLVD./LAS VEGAS, NEVADA 89146
TELEPHONE (702) 804-2000 • FAX (702) 804-2299
F:\V20\Unit1\dwg\imps\V201c044.dwg

SUMMERLIN

VILLAGE 20 - UNIT 1 IMPROVEMENTS

MISCELLANEOUS DETAILS

JOB NO. 62020.221

SHEET 44 OF 61 SHTS

1077-4563

38864