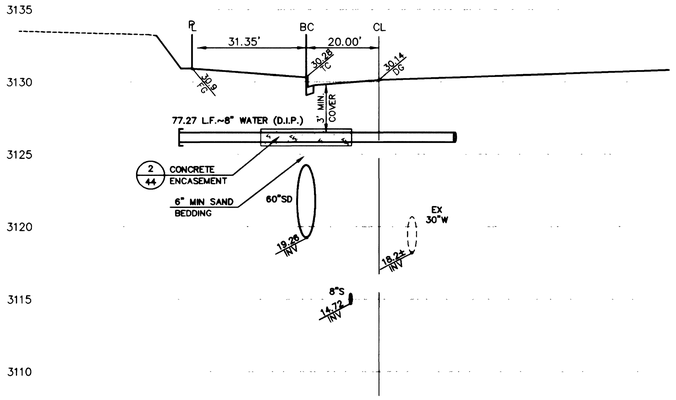

VISTA RUN DRIVE WATER
LATERAL DETAIL @ STA. 103+29.00 (9 / –)

SCALE: HORIZ. 1" = 20'
VERT. 1" = 5'

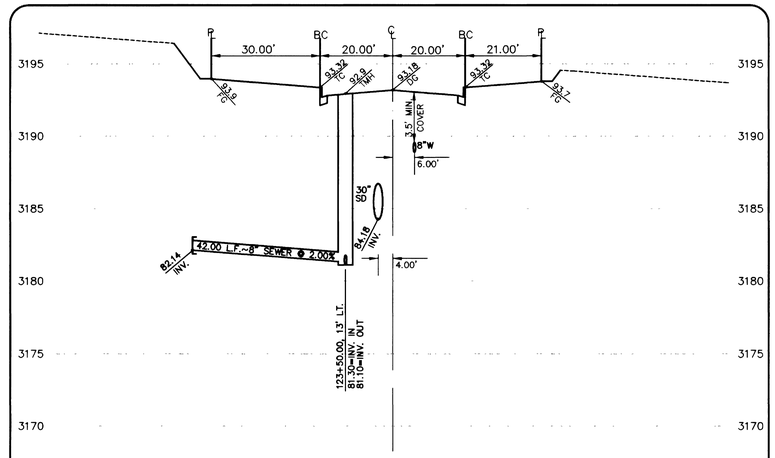

VISTA RUN DRIVE SEWER
LATERAL DETAIL @ STA. 123+50.00 (6 / –)

SCALE: HORIZ. 1" = 20'
VERT. 1" = 5'

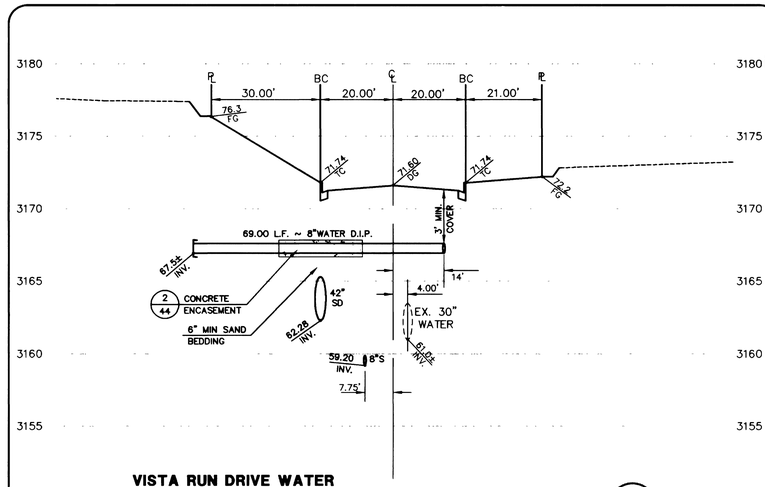

VISTA RUN DRIVE WATER
LATERAL DETAIL @ STA. 115+60.70 (3 / –)

SCALE: HORIZ. 1" = 20'
VERT. 1" = 5'

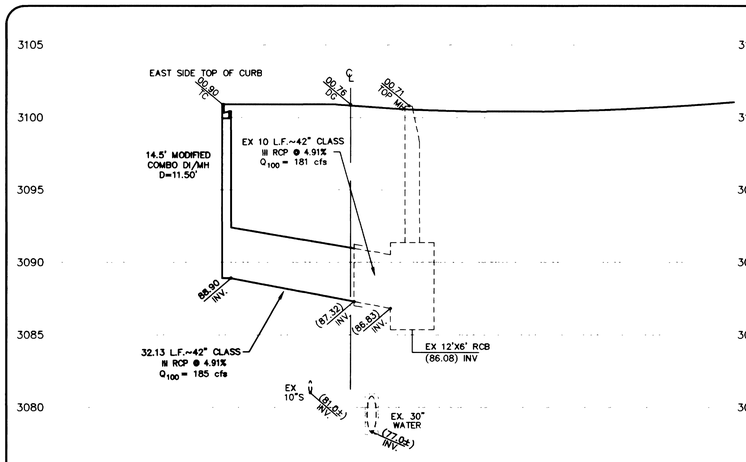

PARK VISTA DRIVE STORM DRAIN
LATERAL DETAIL @ STA. 116+13.14 (8 / –)

SCALE: HORIZ. 1" = 20'
VERT. 1" = 5'

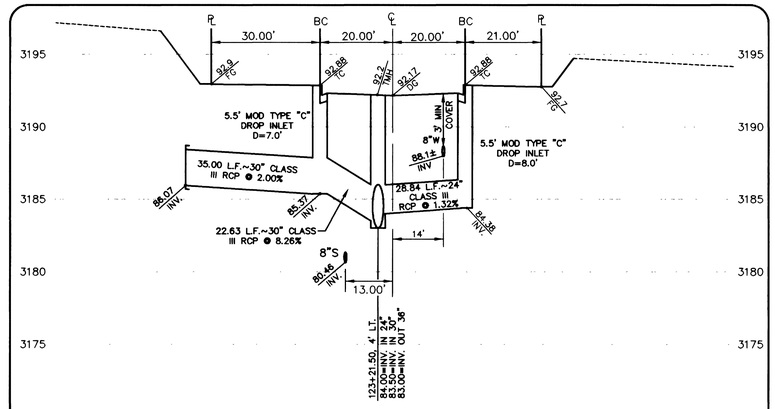

VISTA RUN DRIVE STORM DRAIN
LATERAL DETAIL @ STA. 123+21.50 (5 / –)

SCALE: HORIZ. 1" = 20'
VERT. 1" = 5'

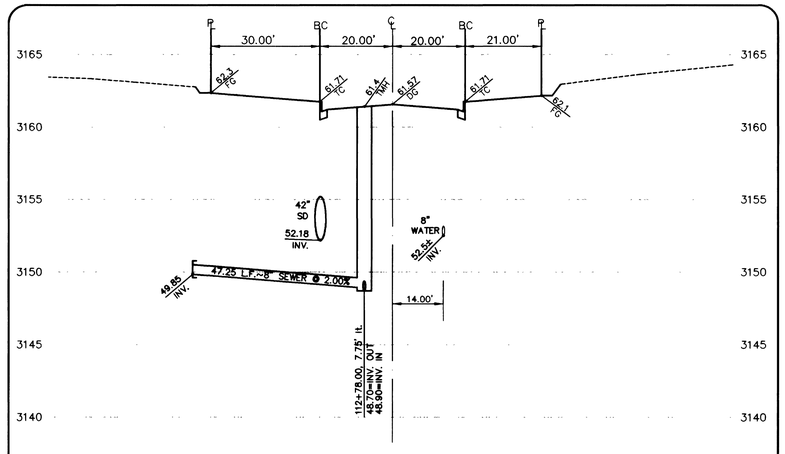

VISTA RUN DRIVE SEWER
LATERAL DETAIL @ STA. 112+78.00 (2 / –)

SCALE: HORIZ. 1" = 20'
VERT. 1" = 5'

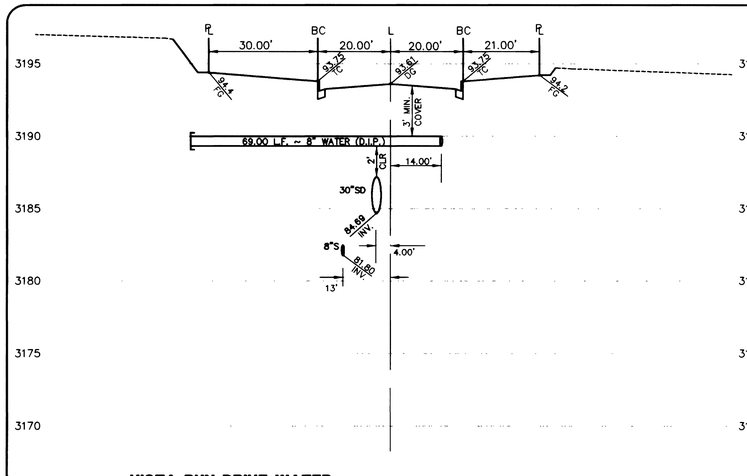

VISTA RUN DRIVE WATER
LATERAL DETAIL @ STA. 123+62.00 (7 / –)

SCALE: HORIZ. 1" = 20'
VERT. 1" = 5'

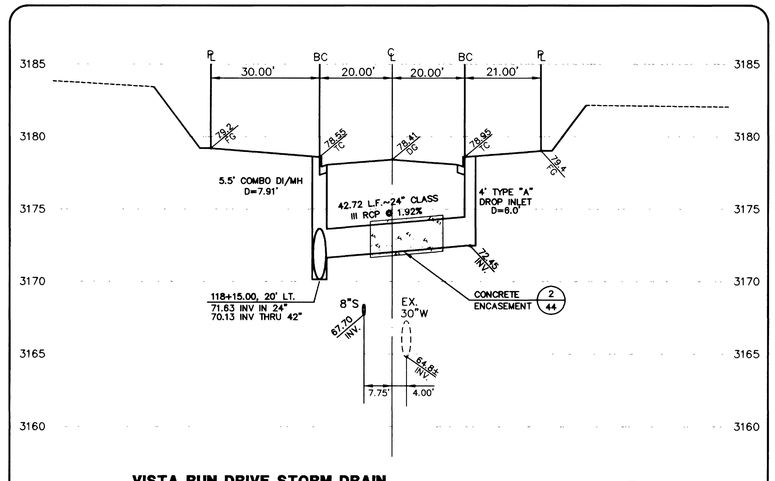

VISTA RUN DRIVE STORM DRAIN
LATERAL DETAIL @ STA. 118+15.00 (4 / –)

SCALE: HORIZ. 1" = 20'
VERT. 1" = 5'

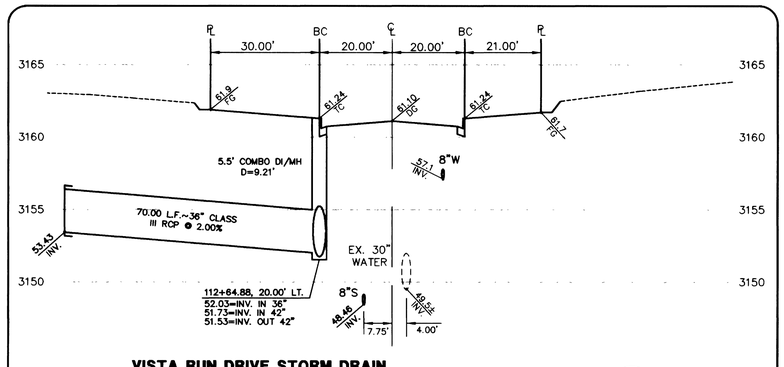

VISTA RUN DRIVE STORM DRAIN
LATERAL DETAIL @ STA. 112+64.88 (1 / –)

SCALE: HORIZ. 1" = 20'
VERT. 1" = 5'

APPROVAL:

Nan Hall — 1/31/02
LAS VEGAS VALLEY WATER DISTRICT — DATE

38860

REV	DATE	DESCRIPTION	DATE AGEN.	APP.	DATE GCW	APP.	DATE

DESIGN: JJ
DRAWN: JJ
CHECK: BAH
ISSUE DATE:
ISSUE EDITOR:
PLOT DATE 01-29-02
PLOT TIME 11:26:45
Johnson

G.C. WALLACE, INC.
Engineering/Architecture
1555 SOUTH RAINBOW BLVD./LAS VEGAS, NEVADA 89146
TELEPHONE: (702) 804-2000• FAX: (702) 804-2299
F:\V20\Unit1\dwg\mps\V201C040.dwg

SUMMERLIN
VILLAGE 20 - UNIT 1 IMPROVEMENTS
LATERAL DETAILS

SHEET **40** OF 61 SHTS
1074-4563

JOB NO. 62020.221