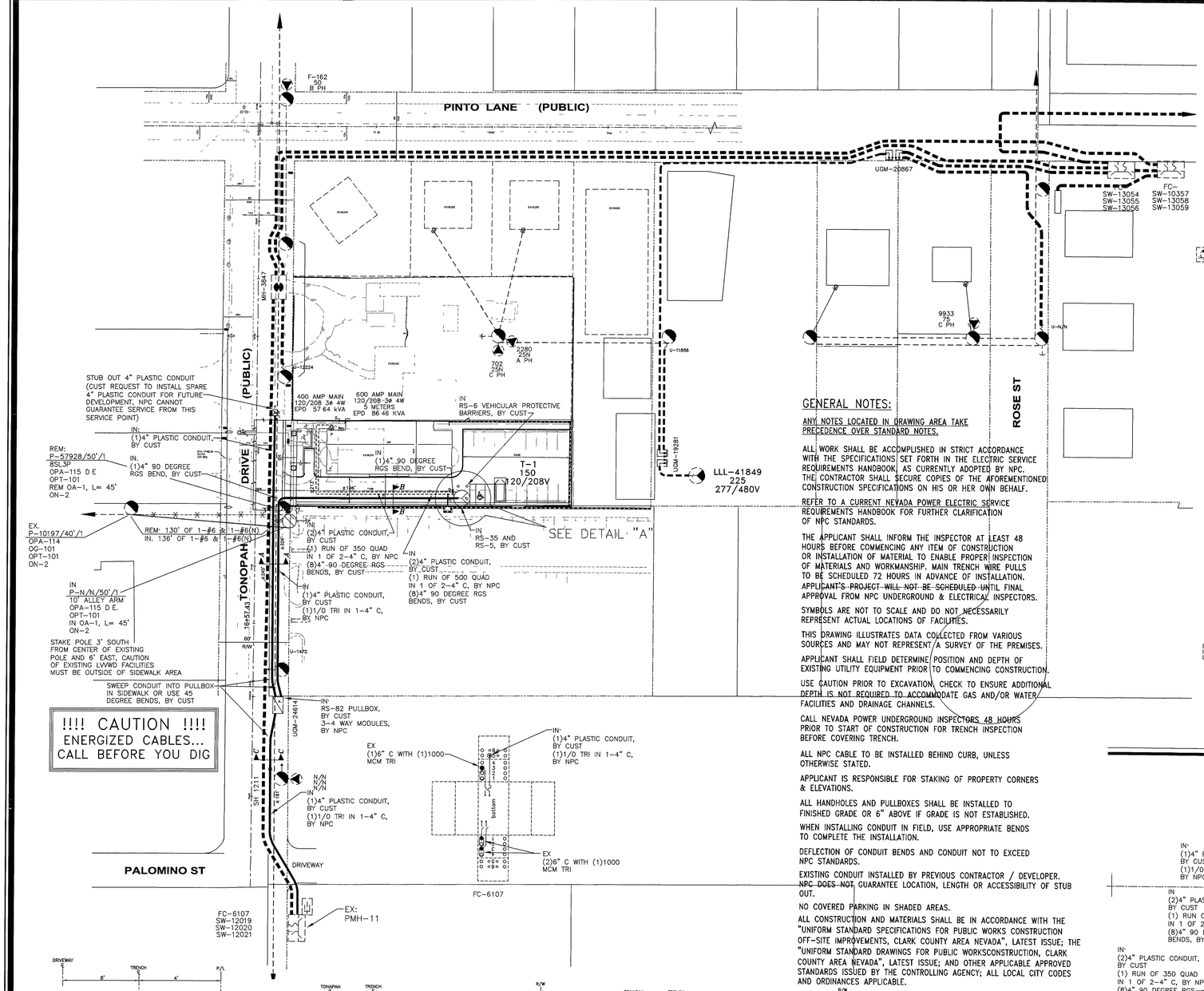

GENERAL NOTES:

ANY NOTES LOCATED IN DRAWING AREA TAKE PRECEDENCE OVER STANDARD NOTES.

ALL WORK SHALL BE ACCOMPLISHED IN STRICT ACCORDANCE WITH THE SPECIFICATIONS SET FORTH IN THE ELECTRIC SERVICE REQUIREMENTS HANDBOOK, AS CURRENTLY ADOPTED BY NPC. THE CONTRACTOR SHALL SECURE COPIES OF THE AFOREMENTIONED CONSTRUCTION SPECIFICATIONS ON HIS OR HER OWN BEHALF.

REFER TO A CURRENT NEVADA POWER ELECTRIC SERVICE REQUIREMENTS HANDBOOK FOR FURTHER CLARIFICATION OF NPC STANDARDS.

THE APPLICANT SHALL INFORM THE INSPECTOR AT LEAST 48 HOURS BEFORE COMMENCING ANY ITEM OF CONSTRUCTION OR INSTALLATION OF MATERIAL TO ENABLE PROPER INSPECTION OF MATERIALS AND WORKMANSHIP. MAIN TRENCH WIRE PULLS TO BE SCHEDULED 72 HOURS IN ADVANCE OF INSTALLATION. APPLICANT'S PROJECT WILL NOT BE SCHEDULED UNTIL FINAL APPROVAL FROM NPC UNDERGROUND & ELECTRICAL INSPECTORS.

SYMBOLS ARE NOT TO SCALE AND DO NOT NECESSARILY REPRESENT ACTUAL LOCATIONS OF FACILITIES.

THIS DRAWING ILLUSTRATES DATA COLLECTED FROM VARIOUS SOURCES AND MAY NOT REPRESENT A SURVEY OF THE PREMISES.

APPLICANT SHALL FIELD DETERMINE POSITION AND DEPTH OF EXISTING UTILITY EQUIPMENT PRIOR TO COMMENCING CONSTRUCTION.

USE CAUTION PRIOR TO EXCAVATION. CHECK TO ENSURE ADDITIONAL DEPTH IS NOT REQUIRED TO ACCOMMODATE GAS AND/OR WATER FACILITIES AND DRAINAGE CHANNELS.

CALL NEVADA POWER UNDERGROUND INSPECTORS 48 HOURS PRIOR TO START OF CONSTRUCTION FOR TRENCH INSPECTION BEFORE COVERING TRENCH.

ALL NPC CABLE TO BE INSTALLED BEHIND CURB, UNLESS OTHERWISE STATED.

APPLICANT IS RESPONSIBLE FOR STAKING OF PROPERTY CORNERS & ELEVATIONS.

ALL HANDHOLES AND PULLBOXES SHALL BE INSTALLED TO FINISHED GRADE OR 6" ABOVE IF GRADE IS NOT ESTABLISHED.

WHEN INSTALLING CONDUIT IN FIELD, USE APPROPRIATE BENDS TO COMPLETE THE INSTALLATION.

DEFLECTION OF CONDUIT BENDS AND CONDUIT NOT TO EXCEED NPC STANDARDS.

EXISTING CONDUIT INSTALLED BY PREVIOUS CONTRACTOR / DEVELOPER. NPC DOES NOT GUARANTEE LOCATION, LENGTH OR ACCESSIBILITY OF STUB OUT.

NO COVERED PARKING IN SHADED AREAS.

ALL CONSTRUCTION AND MATERIALS SHALL BE IN ACCORDANCE WITH THE "UNIFORM STANDARD SPECIFICATIONS FOR PUBLIC WORKS CONSTRUCTION OFF-SITE IMPROVEMENTS, CLARK COUNTY AREA NEVADA", LATEST ISSUE; THE "UNIFORM STANDARD DRAWINGS FOR PUBLIC WORKS CONSTRUCTION, CLARK COUNTY AREA NEVADA", LATEST ISSUE; AND OTHER APPLICABLE APPROVED STANDARDS ISSUED BY THE CONTROLLING AGENCY; ALL LOCAL CITY CODES AND ORDINANCES APPLICABLE.

COMMERCIAL

EXIST NEW

NPC WORK AND SERVICES TO CONSIST OF:

- 1/0 TRIPLEX, 15 KV AL PRIMARY CABLE IN 4" PLASTIC CONDUIT (CONDUIT BY CONTRACTOR).
- 1/0, 15 KV AL PRIMARY CABLE IN 4" PLASTIC CONDUIT (CONDUIT BY CONTRACTOR).
- CONDUIT LOCATING DEVICE 18" ABOVE STUBOUT.
- SINGLE PHASE PRIMARY POLE RISER PER NPC U.G. STD. OEP-105.
- THREE PHASE PRIMARY POLE RISER PER NPC U.G. STD. OEP-106.
- SECONDARY RISER PER NPC U.G. STD. SSP-2.
- SINGLE PHASE COMMERCIAL PADMOUNTED TRANSFORMER WITH SIZE AS NOTED, 7200-120/240V, PER NPC U.G. STD. UT-105.
- (2) SINGLE PHASE PADMOUNTED COMMERCIAL TRANSFORMERS WITH SIZE AS NOTED, 7200-120/240V, CONNECT OPEN WYE-OPEN DELTA FOR THREE PHASE 120-240V SERVICE, PER NPC U.G. STD. UT-107, WHERE APPLICABLE.
- (3) SINGLE PHASE PADMOUNTED COMMERCIAL TRANSFORMERS WITH SIZE AS NOTED, 7200-120/240V, CONNECT CLOSED WYE-CLOSED DELTA FOR THREE PHASE 120-240V SERVICE, PER NPC U.G. STD. UT-109, WHERE APPLICABLE.
- THREE PHASE COMMERCIAL PADMOUNTED TRANSFORMER WITH SIZE & VOLTAGE AS NOTED, PER NPC U.G. STD. UT-101, WHERE APPLICABLE.
- TERMINATION OF ALL MODULES, MAKES, SPLICES AND FINAL CONNECTIONS.
- NPC TO COIL PRIMARY CABLE IN PULLBOX FOR FUTURE SPLICES, WHERE APPLICABLE.
- NPC TO CUT EXISTING CONDUIT AND TERMINATE PRIMARY CABLES ON THE LOAD BREAK MODULE, WHERE APPLICABLE.
- SERVICE CABLE BY NPC UNLESS NOTED OTHERWISE.

EXIST NEW

APPLICANT TO FURNISH AND INSTALL:

- ALL TRENCHING & BACKFILL, MEETING APPLICABLE NPC STANDARD (RT-7 OR RT-12).
- 4" PLASTIC CONDUIT, PER NPC U.G. STD. RC-1 AND RC-2.
- 4" PLASTIC CONDUIT BENDS (90°, 45°) WITH 36" MIN. RADIUS. (IF CONDUIT LENGTH IS UNDER 100')
- 4" RGS BENDS (90°, 45°) WITH 36" MINIMUM RADIUS, TAPED OR PVC COATED. (IF CONDUIT LENGTH IS OVER 100')
- COUPLING FOR 2", 4", OR 6" CONDUITS (AS APPLICABLE).
- ALL SERVICE CONDUIT - 4" MINIMUM DB60 PVC GRAY (RISER: RGS REQUIRED) WITH 5/32" POLYPROPYLENE PULL LINE WITH A MIN. BREAKING STRENGTH OF 1250 lbs.
- 2'-6" X 4' X 4' SPLICE PULLBOX PER NPC U.G. STD. RS-80.
- 3' X 7' X 4' PULLBOX PER NPC U.G. STD. RS-82.
- PAD FOR (1) SINGLE PHASE COMMERCIAL TRANSFORMER, PER NPC U.G. STD. RS-19 AND RS-5.
- PAD FOR (2) SINGLE PHASE COMMERCIAL TRANSFORMERS, PER NPC U.G. STD. RS-20 AND RS-5.
- PAD FOR (3) SINGLE PHASE COMMERCIAL TRANSFORMERS, PER NPC U.G. STD. RS-21 AND RS-5.
- PAD FOR (1) THREE PHASE COMMERCIAL TRANSFORMER, PER NPC U.G. STD. RS-35, RS-37, RS-40 OR RS-41, AND RS-5.
- VEHICLE PROTECTIVE BARRIERS PER NPC U.G. STD. RS-6, WHERE APPLICABLE.

T,R,S: 2061-33
APN: 13933302025

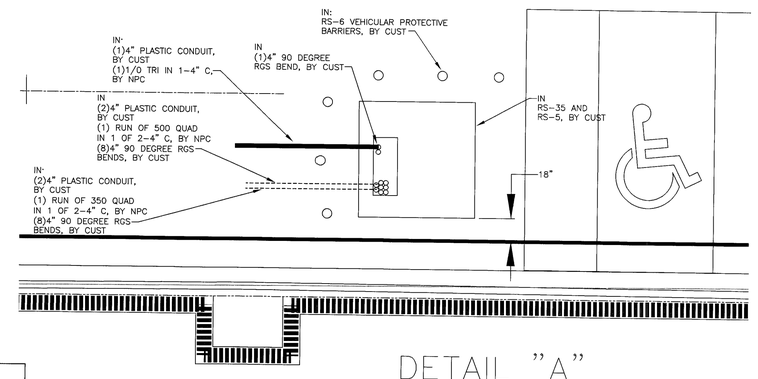

DETAIL "A"
1"=5'

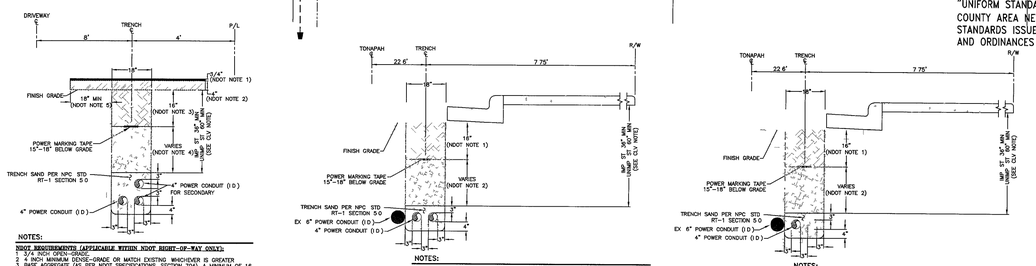

NOTES:

NDOT REQUIREMENTS (APPLICABLE WITHIN NDOT RIGHT-OF-WAY ONLY):
1 BASE AGGREGATE (AS PER NDOT SPECIFICATIONS SECTION 704) A MINIMUM OF 16 INCHES TO BE LAID IN MAXIMUM 8 INCH LOOSE LIFTS 95% COMPACTION REQUIRED
2 4" INCH MINIMUM DENSE-GRADE OR MATCH EXISTING WHICHEVER IS GREATER
3 BASE AGGREGATE (AS PER NDOT SPECIFICATIONS, SECTION 704) A MINIMUM OF 16 INCHES TO BE LAID IN MAXIMUM 8 INCH LOOSE LIFTS 95% COMPACTION REQUIRED
4 BACKFILL WITH SELECT MATERIAL TO BOTTOM OF BASE AGGREGATE (AS PER NDOT SPECIFICATIONS, SECTION 207) 90% COMPACTION REQUIRED
5 LIMITS OF PAVING TO BE DETERMINED BY THE INSPECTOR

CLV REQUIREMENTS (APPLICABLE WITHIN CITY OF LAS VEGAS LIMITS ONLY).
IMPROVED AREA (MP. ST.). (LOCATION OF TRENCH)
AREA WILL BE CONSIDERED IMPROVED IF IT MEETS ONE OR MORE OF THE FOLLOWING CRITERIA(S):
- EXISTING PERMANENT PAVEMENT WITH CURB & GUTTER AND/OR ADJACENT PERMANENT SIDEWALK
- WITHIN AN IMPROVED TRAIL AREA
- LIMITS OF CONSTRUCTION INSTALLED CONCURRENT WITH A PRIVATE OR PUBLIC PROJECT

UNIMPROVED AREA (UNIMP. ST.). (LOCATION OF TRENCH)
ANY OTHER SCENARIO THAT FAILS TO MEET THE IMPROVED AREA CRITERA(S) WILL BE CONSIDERED AN UNIMPROVED AREA.

NPC REQUIREMENTS:
FOR ALL OTHER JURISDICTIONS REFER TO NPC STANDARDS
BACKFILL REQUIREMENTS: NPC STD. RT-1
TRENCH DEPTH REQUIREMENTS NPC STD RT-5

TRENCH DETAIL
1-4" CONDUITS

103103

TRENCH DETAIL B-B .

TRENCH DETAIL
2-4" CONDUITS

TRENCH DETAIL A-A

TRENCH DETAIL
2-4" CONDUITS

TRENCH DETAIL C-C

CITY OF LAS VEGAS
PERMIT REQUIRED*

CONTACT CLV LAND DEVELOPMENT (229-6371)
CLV CONSTRUCTION SERVICES MUST BE NOTIFIED 24 HOURS PRIOR TO COMMENCING CONSTRUCTION (229-6337)

*NPC INSPECTOR MUST BE NOTIFIED BY FAX 48 HOURS PRIOR TO COMMENCING CONSTRUCTION & WILL VERIFY CITY PERMIT FOR WORK DONE IN STREETS OR SIDEWALK.
FAX PERMIT TO:
LAS VEGAS NORTH: 657-4354
LAS VEGAS SOUTH (HENDERSON): 558-4740
LAS VEGAS SOUTH (SPRING VALLEY): 252-4828

PURPOSE OF PROJECT:
PROVIDE THREE PHASE SERVICE
FOR PROJECT SITE

APPROVED FOR CONSTRUCTION

THIS APPROVAL IS FOR WORK IN CLV R/W & EASEMENT ONLY. OBTAINING PERMISSIONS OR EASEMENTS FOR WORK SHOWN ON PRIVATE PROPERTY IS THE RESPONSIBILITY OF THE UTILITY.

APPROVAL 6/5/2007 DATE

CIVIL LINETYPE LEGEND

	PROPOSED	EXISTING
CENTERLINE		
PROPERTY LINE/ROW		
CURB		
EDGE OF PAVEMENT		
EDGE OF SIDEWALK		
SEWER LINE *	8"S	8"S
WATER LINE *	8"W	8"W
GAS LINE *	2"G	2"G
TELEPHONE LINE *	TEL	TEL
CABLE TV LINE *	CATV	CATV
STORM DRAIN LINE *	12"SD	12"SD
FIRE HYDRANT		
STREET LIGHT		
STREET LIGHT SERVICE	W	W

* LINETYPES UTILIZED WHERE CONFLICT OCCURS WITH NPC FACILITIES

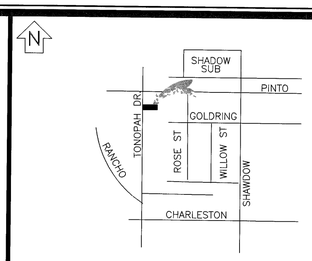

VICINITY MAP
(NOT TO SCALE)

EVERY EFFORT HAS BEEN MADE TO IDENTIFY ALL NPC FACILITIES. THE CUSTOMER SHALL CONFIRM THE EXISTENCE AND LOCATION OF THESE FACILITIES.

AVOID HITTING OVERHEAD POWER LINES IT'S COSTLY
CALL BEFORE YOU DO OVERHEAD
CALL 1-702-227-2929

AVOID CUTTING UNDERGROUND UTILITY LINES IT'S COSTLY
Call before you Dig.
1-800-227-2600
UNDERGROUND SERVICE (USA)

REVISIONS

NO.	DESCRIPTION	DATE	G.A.

TYPE OF EASEMENT:
- AERIAL
- STANDARD
- R/W-31
- UNDERGROUND
- AS BUILT UNDERGROUND
- R O E /R/W-5-COM
- 3rd PARTY
- UNDERGROUND BY EXHIBIT
- (N-DOT) PERMIT
- (BLM) PERMIT
- RAILROAD-UPRR-PERMIT
- SO NEVADA WATER PERMIT
- NOT REQUIRED
- Misc Info

JPA NOTES:
EMBARQ CONTACT: N/A
PHONE NUMBER:
DATE OF CONTACT:
TO SET NEW POLES
TO STAKE NEW POLES
TO PROVIDE POLES
FT. CLASS
FT. CLASS
FT. CLASS
TO DIG POLE HOLES
TO REMOVE EX. POLES
N/A
JPA#:

NPC INFORMATION:
COORDINATOR: PATRICIA BROWN
PHONE: 657-4335
DESIGNER: DARRYL THOMAS
DCA:
INSPECTOR: 378-3725
STAND BY: 657-4117,657-4116,657-4118
DISTRICT: LAS VEGAS

CUSTOMER INFORMATION:
APPLICANT PEAK
ENGINEER: GREENTECH CONSULTING
CONTACT: RICH RIAL 376-0527
APPROVAL DATE: 1/24/07

GOVERNMENT INFORMATION:
AGENCY: CITY OF LAS VEGAS
APPROVAL DATE:

NEVADA POWER COMPANY

107V4628-NPC

THE GRAND
(AKA THE AVENUE)
PINTO & TOHOPAH

PROJ. ID: 183344	SCALE: 1" = 50'
SHEET #: 1 OF 1	DATE: 12/29/2006

NEVADA