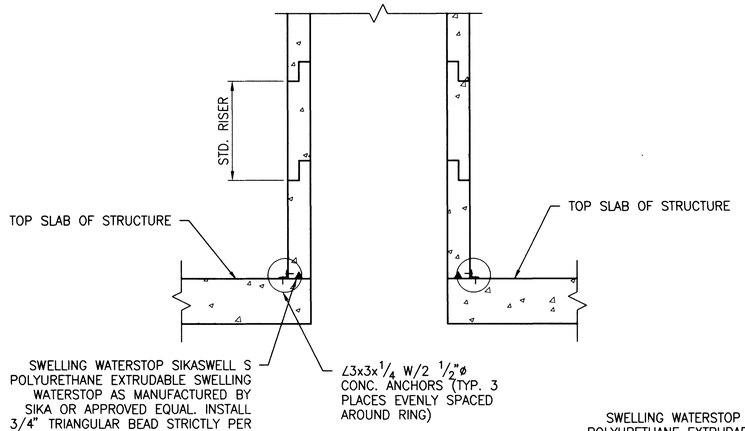

MANHOLE RISER CONNECTION

N.T.S.

1 / S2

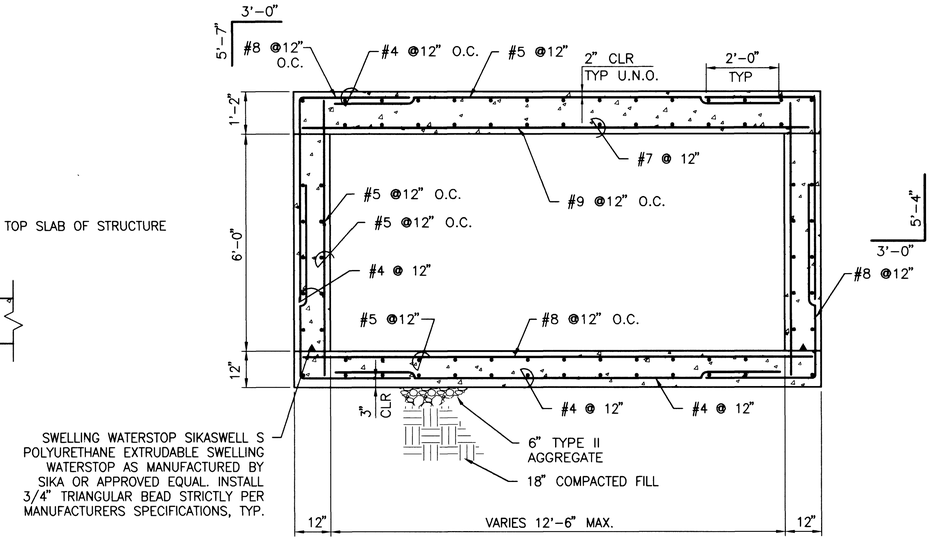

JUNCTION STRUCTURE

1/2" = 1'-0"

A / S2

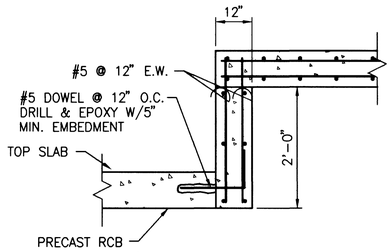

SECTION

N.T.S.

B / S2

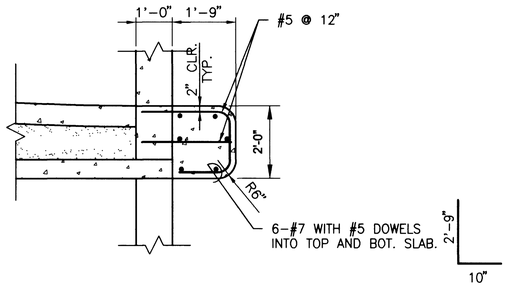

SECTION

1/2" = 1'-0"

C / S2

CONSULTING STRUCTURAL ENGINEERS
11545 WEST BERNARDO CT., SUITE 300
SAN DIEGO, CA 92127
PHONE (619) 673-8416
FAX (619) 673-8418

CONSULTING ENGINEERS ● PLANNERS ● LAND SURVEYORS
2727 SOUTH RAINBOW BOULEVARD
LAS VEGAS, NEVADA 89146-5148 PHONE (702) 873-7550 FAX (702) 362-2597

REVISION | BY | DATE | REV.

DEPARTMENT OF PUBLIC WORKS
CITY OF LAS VEGAS

vtn nevada

SECTIONS AND DETAILS
JUNCTION STRUCTURE
SD STA. 320+15.11 TO SD STA. 320.68.96

PROJECT
TENAYA WAY AND SKY POINTE DRIVE
INTERSECTION DRAINAGE IMPROVEMENTS

SEAL
PROFESSIONAL ENGINEER - STATE OF NEVADA
DAVID W. SEELEY
No. 11751
7/31/01

WO NO	5548
DESIGNED BY	DWS
DRAWN BY	ELY
DATE	8/01/01
SCALE HORIZ / VERT	
DRAWING	S2
SHEET	D4 OF 5 SHEETS

SDD6

69 OF 70

37677