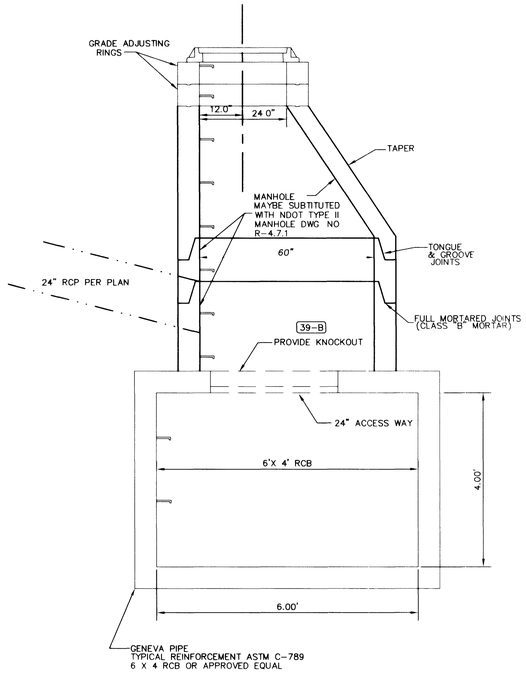

MANHOLE DETAIL

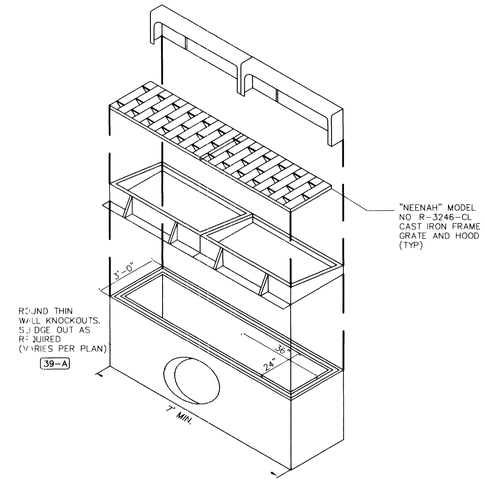

PC2 2' X 6' DROP INLET W/ CAST IRON FRAME, GRATE AND HOOD

N.T.S.

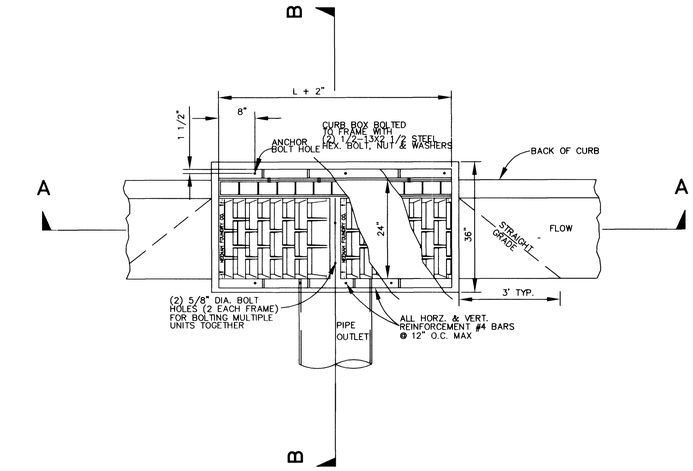

PLAN VIEW - TYPE "PC2 AND PC3" INLET

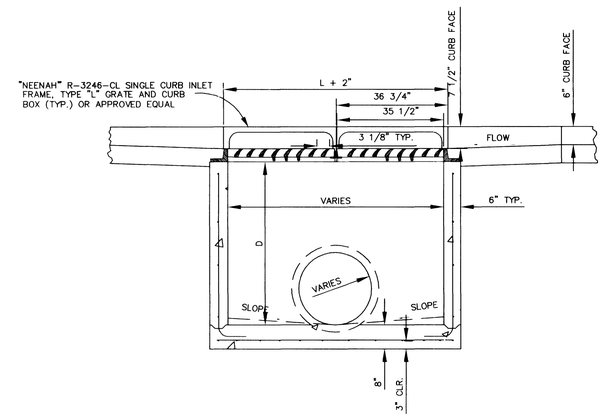

SECTION A-A

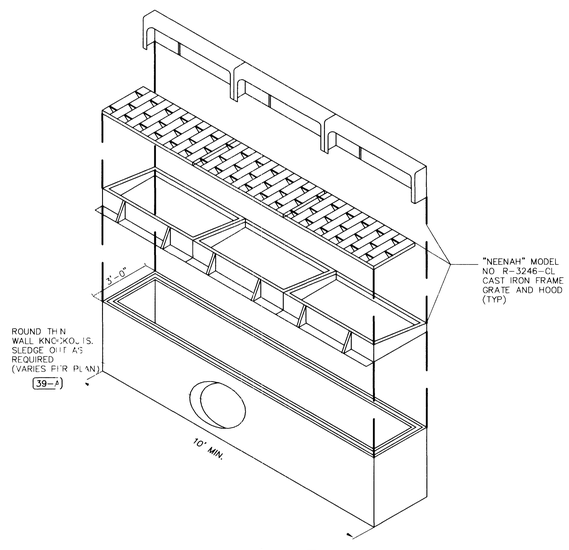

PC3 2' X 9' DROP INLET W/ CAST IRON FRAME, GRATE AND HOOD

N.T.S.

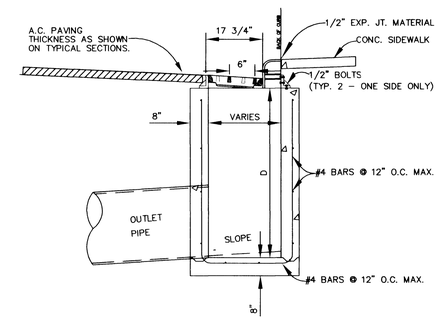

SECTION B-B

RE-WELD REINFORCING WIRE PRIOR TO GROUTING
GROUT ALL AROUND JOINT

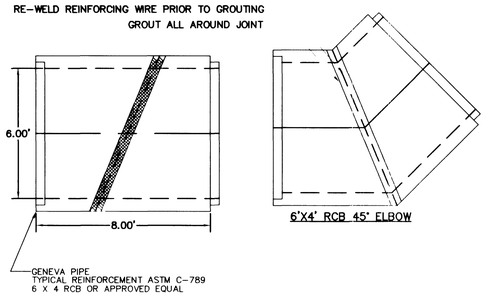

6'X4' RCB - 45° BEND

N.T.S.

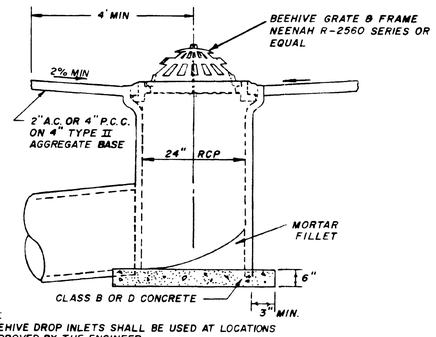

NOTE:
BEEHIVE DROP INLETS SHALL BE USED AT LOCATIONS APPROVED BY THE ENGINEER.

BEEHIVE DROP INLET

N.T.S. STD. DWG. NO. 41t

GENERAL NOTES:

1. BOX DESIGN LOAD H-20 TRAFFIC.
2. JENSEN PRECAST DROP INLETS OR EQUIVALENT.
3. FOR JENSEN PRECAST DROP INLET COMPLETE DESIGN AND PRODUCT INFORMATION CONTACT JENSEN PRECAST.
4. DEPTH OF DROP INLETS ARE MEASURED FROM FL TO INVERT.

REV	DATE	BY	REVISION

DEPARTMENT OF PUBLIC WORKS ENGINEERING DESIGN SECTION
400 EAST STEWART
LAS VEGAS NV, 89101
(702) 229-5276
CITY ENGINEER: CHARLES KAJKOWSKI, JR., P.E.
PROJECT MANAGER: THERESA M. HANRAHAN, P.E.

PRIMAS AND ASSOCIATES
CONSULTING ENGINEERS
1091 CIMARRON ROAD, SUITE A-3
LAS VEGAS, NV 89145
PHONE (702) 228-8183
FAX (702) 228-8194

SHEET: TENAYA WAY / AZURE DRIVE CONSTRUCTION DETAILS

TITLE: TENAYA WAY / AZURE DRIVE ROADWAY IMPROVEMENTS

DRAWN BY: PACE 3/08/01
DESIGNED BY: GSK 3/08/01
CHECKED BY: 3/5/01
SCALE: HORZ VERT
PROJECT NO: 907.01.01

SEAL

REGISTERED PROFESSIONAL ENGINEER CRAIG A. PRIMAS No 6658 CIVIL STATE OF NEVADA
CRAIG A. PRIMAS P.E.
REG. NO. 6658

SHEET
SDD3
65 OF 70 SHEETS

DRAWING NO.
107-V3145

BID NO. 02.1730.04 DWG NO. 107-V3145

37673

F:\projects\9907_01\907-01001-north\907-NORTH-covers.dwg 08/05/2001 01:10:22 PM PDT