23-2-158

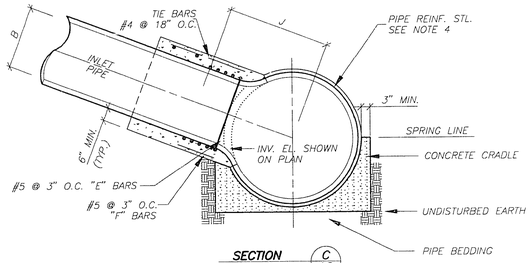

SECTION C/12

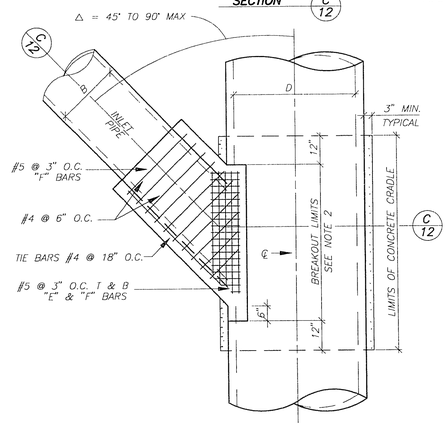

NOTES:

1. VALUES OF B AND D ARE SHOWN ON PLANS.
2. BREAKOUT LIMITS SHALL BE DETERMINED AS FOLLOWS:

UPSTREAM LIMIT	AT THE INTERSECTION OF THE OUTSIDE OF THE INLET WALL WITH THE MAIN PIPE WALL.
DOWNSTREAM LIMIT	6 INCHES DOWNSTREAM OF THE INTERSECTION OF THE INLET WALL WITH THE MAIN LINE PIPE WALL. THE OPENING SHALL BE RECTANGULAR, CUT NORMAL TO PIPE SURFACE AND WITHOUT DAMAGING REINFORCING STEEL. IF A JOINT IN THE MAIN LINE PIPE FALLS WITHIN THE LIMITS OF THE CONCRETE CRADLE, PROVIDE A CONCRETE ENCASEMENT ONE FOOT ABOVE THE TOP OF THE MAIN LINE PIPE TO THE LIMITS OF THE CRADLE.

3. THE TRANSVERSE REINFORCEMENT IN PIPE SHALL BE CUT AT CENTER OF OPENING AND BENT INTO TOP AND BOTTOM SLABS OF INLET.
4. REINFORCING STEEL SHALL BE PLACED 1-1/2 INCHES CLEAR FROM FACE OF CONCRETE.
5. "E" AND "F" BARS SHALL BE CARRIED TO A POINT NOT LESS THAN J DISTANCE FROM CENTERLINE J=7/12 D + 6 INCHES.

TYPE II JUNCTION STRUCTURE 2/12

NTS

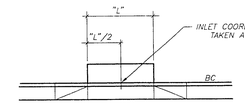

COORDINATE LOCATION

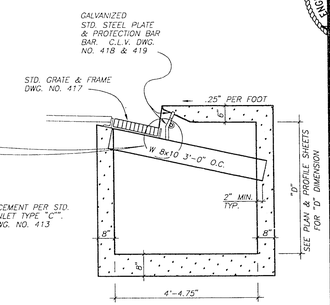

SECTION B/12

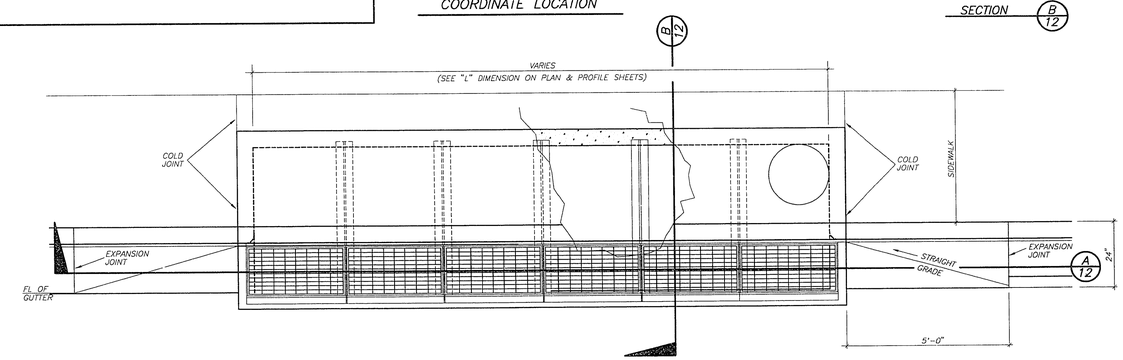

PLAN

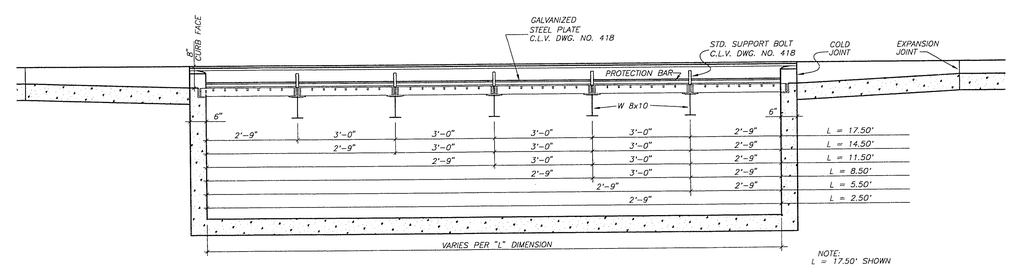

NOTE: L = 17.50' SHOWN

SECTION A/12

MODIFIED TYPE "C" DROP INLET 1/12

SCALE: 1/2" = 1'-0"

REV	DATE	DESCRIPTION	C.L.V.	DATE

RECOMMENDED FOR APPROVAL: SONNY W. NEIGHBORS, P.E. NO. 10118, STATE OF NEVADA — DATE 1-5-95

G.C. WALLACE, INC.
Engineering/Architecture
1555 SOUTH RAINBOW BLVD./LAS VEGAS, NEVADA 89102

DEL WEBB COMMUNITIES, INC.
SUN CITY LAS VEGAS
ANASAZI DRIVE - PHASE I
MODIFIED TYPE "C" INLET DETAILS

SHEET 12 OF 12 SHEETS

JOB NO. 701.218

PLOTTED: 12/27/94 5:00 pm DRAWING: C:\DRAWINGS\DWG\ANA\ANA-12 BY: tlb

107-V2321