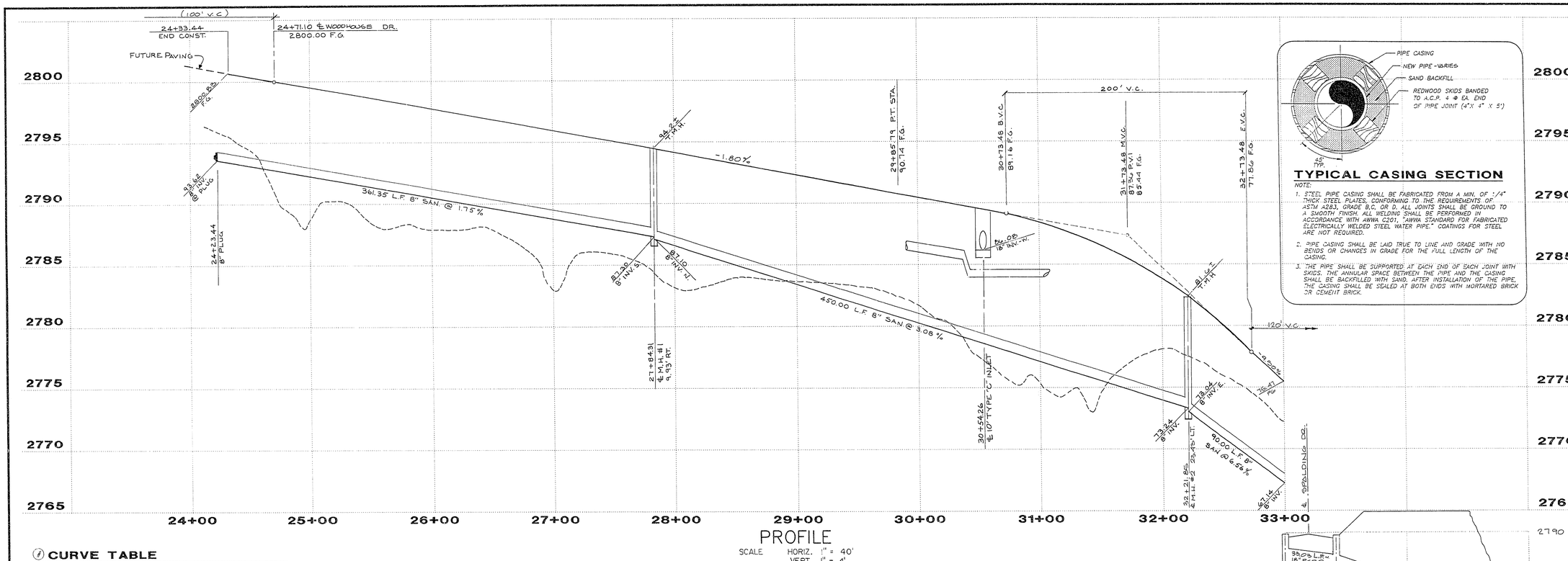

PROFILE

SCALE HORIZ. 1" = 40'
VERT. 1" = 4'

TYPICAL CASING SECTION

NOTE:

1. STEEL PIPE CASING SHALL BE FABRICATED FROM A MIN. OF 1/4" THICK STEEL PLATES, CONFORMING TO THE REQUIREMENTS OF ASTM A283, GRADE B.C. OR D. ALL JOINTS SHALL BE GROUND TO A SMOOTH FINISH. ALL WELDING SHALL BE PERFORMED IN ACCORDANCE WITH AWWA C201, "AWWA STANDARD FOR FABRICATED ELECTRICALLY WELDED STEEL WATER PIPE." COATINGS FOR STEEL ARE NOT REQUIRED.
2. PIPE CASING SHALL BE LAID TRUE TO LINE AND GRADE WITH NO BENDS OR CHANGES IN GRADE FOR THE FULL LENGTH OF THE CASING.
3. THE PIPE SHALL BE SUPPORTED AT EACH END OF EACH JOINT WITH SKIDS. THE ANNULAR SPACE BETWEEN THE PIPE AND THE CASING SHALL BE BACKFILLED WITH SAND. AFTER INSTALLATION OF THE PIPE, THE CASING SHALL BE SEALED AT BOTH ENDS WITH MORTARED BRICK OR CEMENT BRICK.

CURVE TABLE

CURVE	DELTA	RADIUS	LENGTH	TANGENT
1	17°05'28"	53.00'	15.81'	7.96'
2	50°55'42"	53.00'	47.11'	25.24'
3	47°04'58"	53.00'	43.55'	23.09'
4	00°55'24"	4148.00'	66.85'	33.42'
5	01°05'34"	4148.00'	79.11'	39.56'
6	01°05'35"	4148.00'	79.13'	39.57'
7	00°13'49"	4148.00'	16.67'	8.34'
8	00°59'52"	4112.00'	71.61'	35.81'
9	01°04'09"	4112.00'	76.73'	38.37'
10	00°27'51"	4112.00'	33.31'	16.66'
11	24°37'12"	57.00'	24.49'	12.44'
12	90°28'56"	37.00'	58.43'	37.31'
13	90°28'56"	55.00'	86.86'	55.46'
14	115°06'08"	53.00'	106.47'	83.36'
15	06°37'04"	4148.00'	479.10'	239.82'
16	07°39'46"	4130.00'	552.35'	276.59'
17	07°39'46"	4112.00'	549.94'	275.38'

MH COORDINATES

MH#	NORTH	EAST
1	N 532403.612	E 578945.131
2	N 532850.878	E 578994.678

SEWER LINE TABLE

LINE	BEARING	DISTANCE
1	N 12°51'35" E	361.35'
2	S 06°19'17" W	450.00'
3	S 83°11'47" E	249.12'

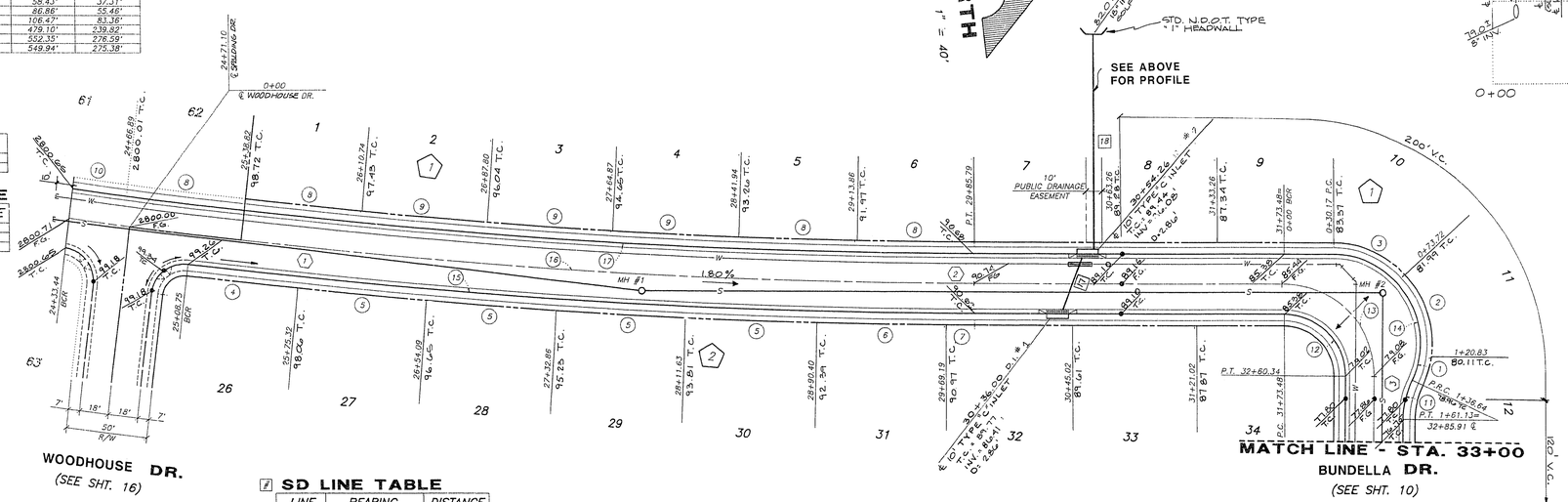

SD LINE TABLE

LINE	BEARING	DISTANCE
17	N 63°29'04" W	33.03'
18	N 83°40'43" W	129.10'

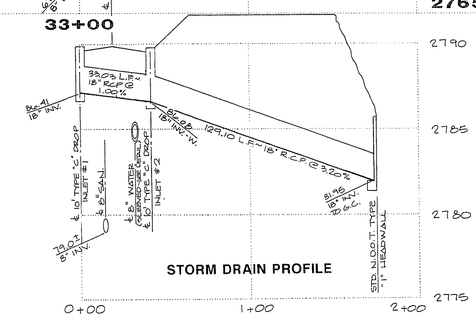

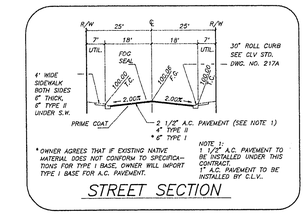

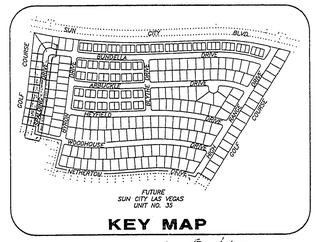

10-8-47

1024-414-34

DEL WEBB COMMUNITIES, INC.
SUN CITY LAS VEGAS UNIT NO. 34
SPALDING DRIVE

G.C. WALLACE, INC.
Engineering/Architecture
1555 SOUTH RAINBOW BLVD., LAS VEGAS, NEVADA 89102

RECOMMENDED
MICHAEL D. ROSS
P.E. NO. 6218
DATE

REV.	DATE	DESCRIPTION	C.L.V.	DATE

SHEET 9 OF 32 SHEETS

JOB NO. 701.154

PLOTTED: 01/02/92 08:42 am DRAWING: d34-9a