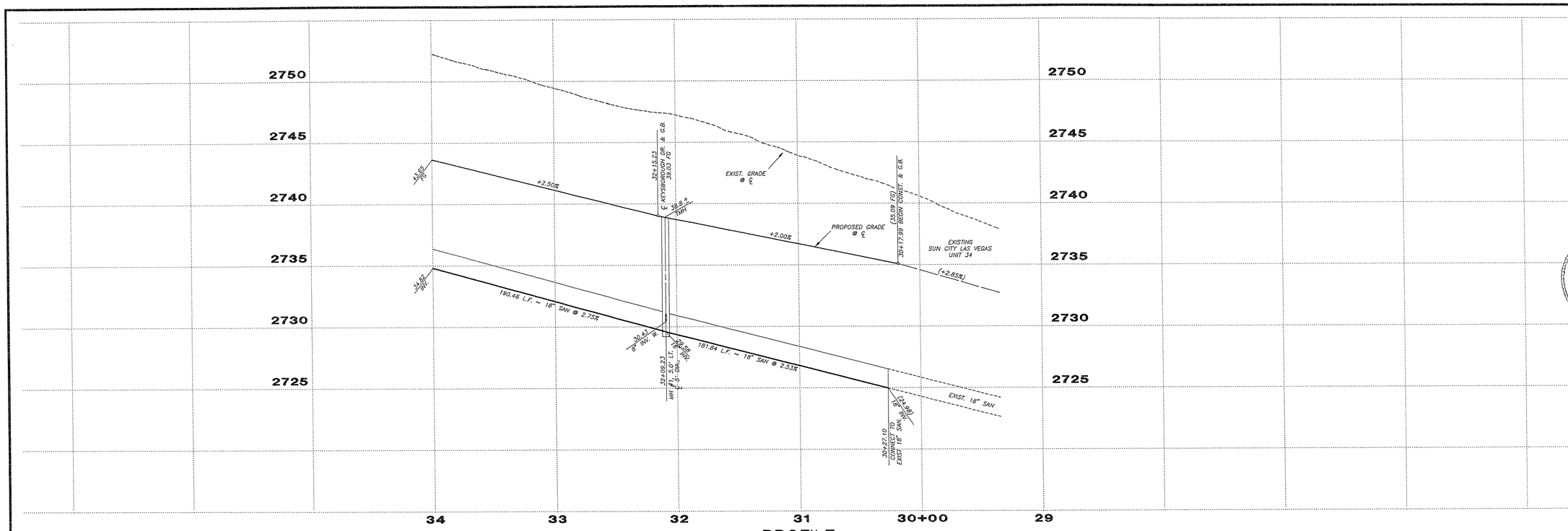


## PROFILE

SCALE: HORIZ. 1" = 40'
VERT. 1" = 4'

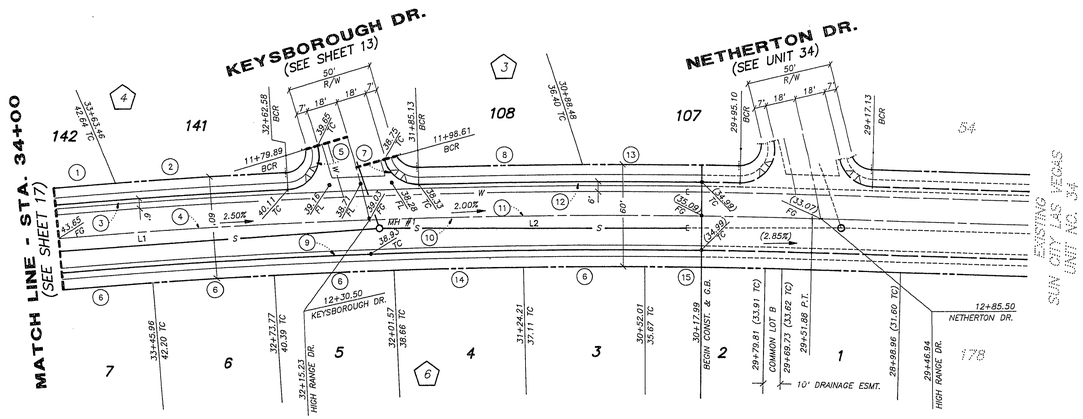


# HIGH RANGE DRIVE

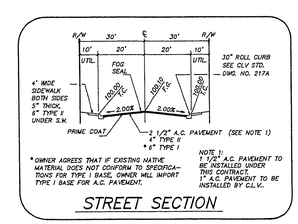


STREET SECTION

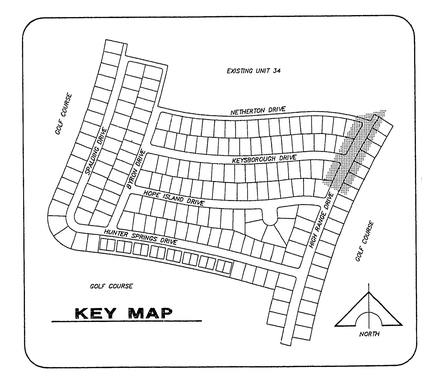


KEY MAP

### BCR CURVE TABLE

| CURVE | DELTA | RADIUS | LENGTH | TANGENT |
|---|---|---|---|---|
| 1 | 01°32'08" | 3820.00' | 102.38' | 51.19' |
| 2 | 01°31'16" | 3820.00' | 101.42' | 50.71' |
| 3 | 03°03'24" | 3820.00' | 203.79' | 101.92' |
| 4 | 04°15'13" | 3800.00' | 282.11' | 141.12' |
| 5 | 104°01'28" | 20.00' | 36.31' | 25.61' |
| 6 | 01°05'19" | 3780.00' | 71.82' | 35.91' |
| 7 | 76°20'25" | 20.00' | 26.65' | 15.72' |
| 8 | 01°27'16" | 3820.00' | 96.97' | 48.49' |
| 9 | 20°26'46" | 3780.00' | 1,346.91' | 681.70' |
| 10 | 20°25'24" | 3800.00' | 1,354.53' | 684.53' |
| 11 | 02°58'26" | 3800.00' | 197.24' | 98.64' |
| 12 | 02°31'12" | 3820.00' | 168.01' | 84.02' |
| 13 | 01°03'56" | 3820.00' | 70.67' | 35.34' |
| 14 | 01°09'59" | 3780.00' | 76.95' | 38.48' |
| 15 | 00°30'46" | 3780.00' | 33.83' | 16.92' |

### SEWER LINE TABLE

| LINE | BEARING | DISTANCE |
|---|---|---|
| L1 | S 25°59'23" W | 282.08' |
| L2 | S 30°10'44" W | 181.84' |

### MH COORDINATES

| MH | NORTHING | EASTING |
|---|---|---|
| MH #1 | N 531470.764 | E 580209.528 |

NORTH
SCALE: 1" = 40'

JOB NO. 701.156

PLOTTED: 04/27/92 1:59 pm

| REV | DATE | DESCRIPTION | C.L.V. | DATE |
|---|---|---|---|---|

RECOMMENDED BY: MICHAEL D. ROSS, P.E. NO. 6218 DATE

G.C. WALLACE, INC.
Engineering/Architecture 1555 SOUTH RAINBOW BLVD./LAS VEGAS, NEVADA 89102

DEL WEBB COMMUNITIES, INC.
SUN CITY LAS VEGAS UNIT NO. 35
HIGH RANGE DRIVE

SHEET 16 OF 25 SHEETS

10-7-20 107Y-4141-35