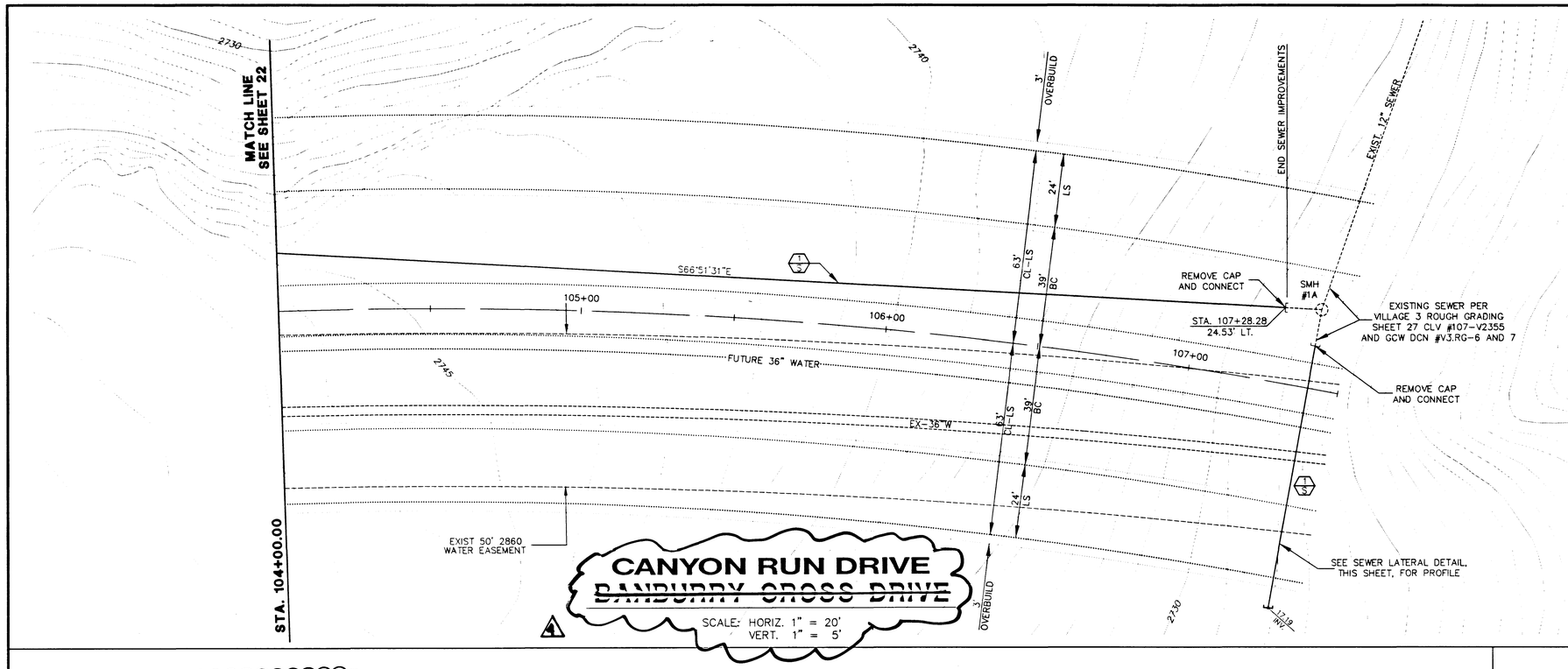

CANYON RUN DRIVE
~~BANBURRY CROSS DRIVE~~

SCALE: HORIZ. 1" = 20'
VERT. 1" = 5'

CONSTRUCTION NOTES

SEWER

INSTALL 12" SEWER PIPE (U-20 / S)

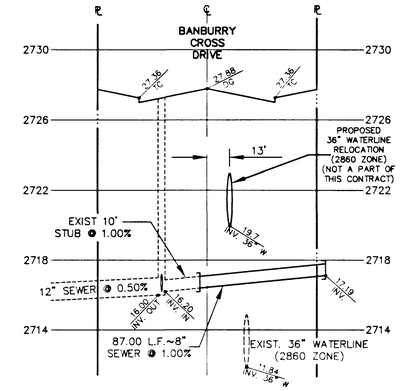

SEWER LATERAL DETAIL @ STA. 107+40.00

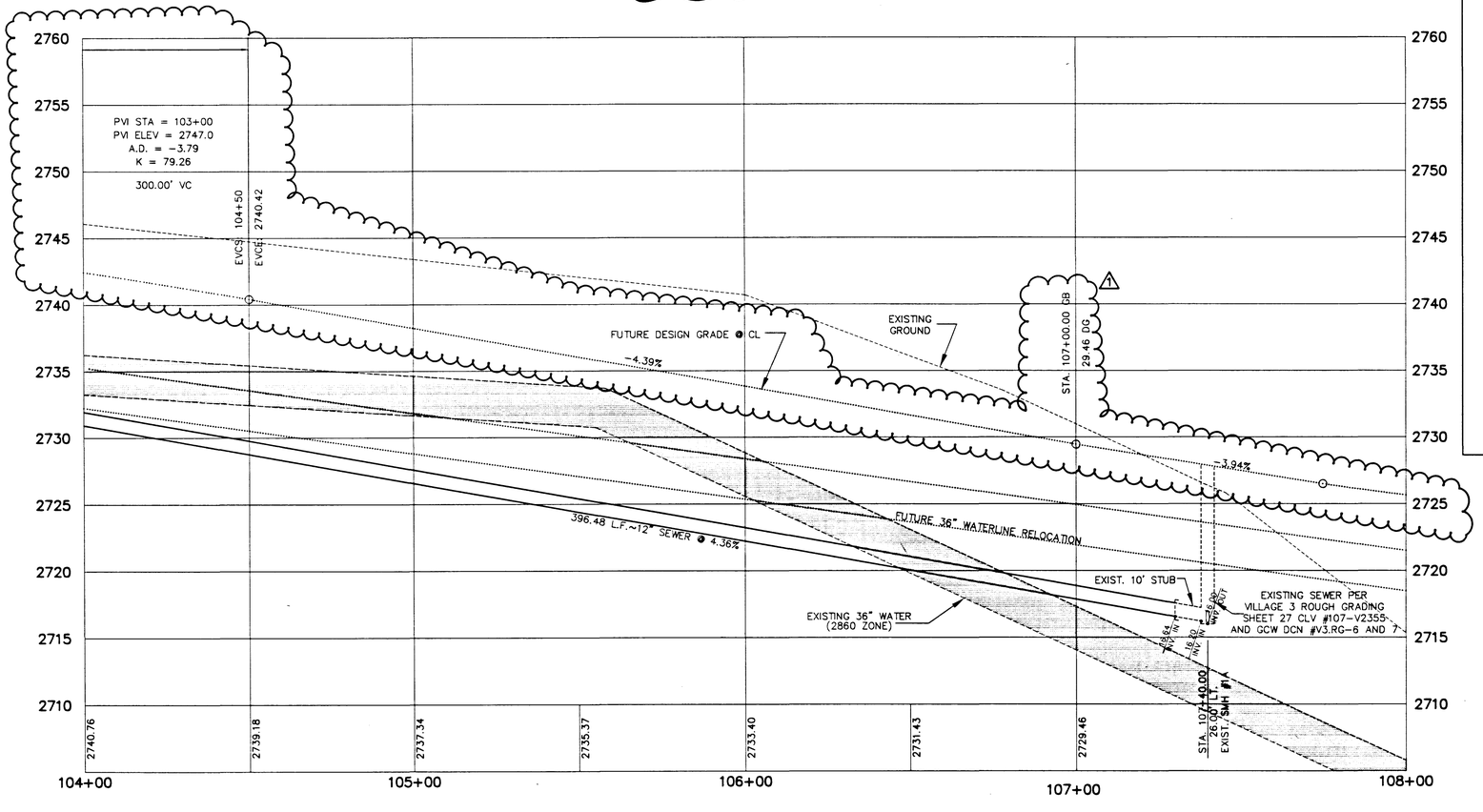

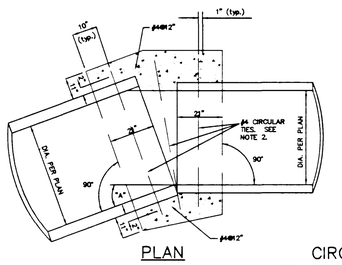

NOTES:

1. WHERE THE SLOPE OF THE UPSTREAM PIPE IS GREATER THAN THE SLOPE OF THE DOWNSTREAM PIPE, JOIN SOFFITS. WHERE THE SLOPE OF THE UPSTREAM PIPE IS LESS THAN THE SLOPE OF THE DOWNSTREAM PIPE, JOIN INVERTS.

2. WHERE THE SPACE BETWEEN THE PIPE EXTREMITIES EXCEEDS 2 1/2 INCHES, THE NUMBER OF CIRCULAR TIES SHALL BE INCREASED TO MAINTAIN A MAXIMUM SPACING OF 6 INCHES CENTER TO CENTER. CIRCULAR TIES SHALL HAVE A DIAMETER 5 INCHES GREATER THAN THE OUTSIDE DIAMETER OF THE LARGER PIPE.

CIRCULAR TIES:

PIPE DIAMETER	SPACE BETWEEN PIPE EXTREMITIES	NO. OF CIRCULAR TIES
21" or less	2 1/2"	3
24" to 30"	2 1/2" or less	3
33" to 57"	2 1/2" or less	4
60" to 66"	2 1/2" or less	5

STORM DRAIN CONC. COLLAR DETAIL (1/23)

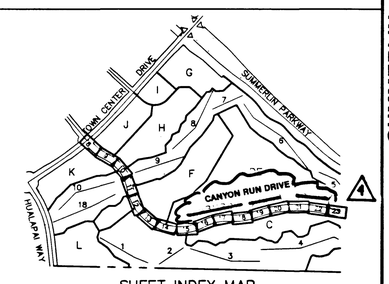

SHEET INDEX MAP

APPROVAL:
1ST APPV'S 10-30-95
LAS VEGAS VALLEY WATER DISTRICT 12/21/95

REV.	DATE	DESCRIPTION	APPROVAL
1	8/19/96	STREET NAME CHANGE	
0	12/5/95	REVISE PROFILE OVER EX. WATER VAULT	

REGISTERED PROFESSIONAL ENGINEER — STATE OF NEVADA — BERT A. HUGHES — CIVIL — NO. 9801 — DATE 12/21/95

G.C. WALLACE, INC.
Engineering/Architecture
1555 SOUTH RAINBOW BLVD./LAS VEGAS, NEVADA 89102

SUMMERLIN
VILLAGE 3
~~CANYON RUN DRIVE~~
PLAN AND PROFILE
STA. 104+00.00 TO STA. 107+40.00

SHEET 23
SHT 23 OF 26

JOB NO. 62003.205

S.T.S. 3CD20-23.DWG 12/13/95

9801

107-V2426

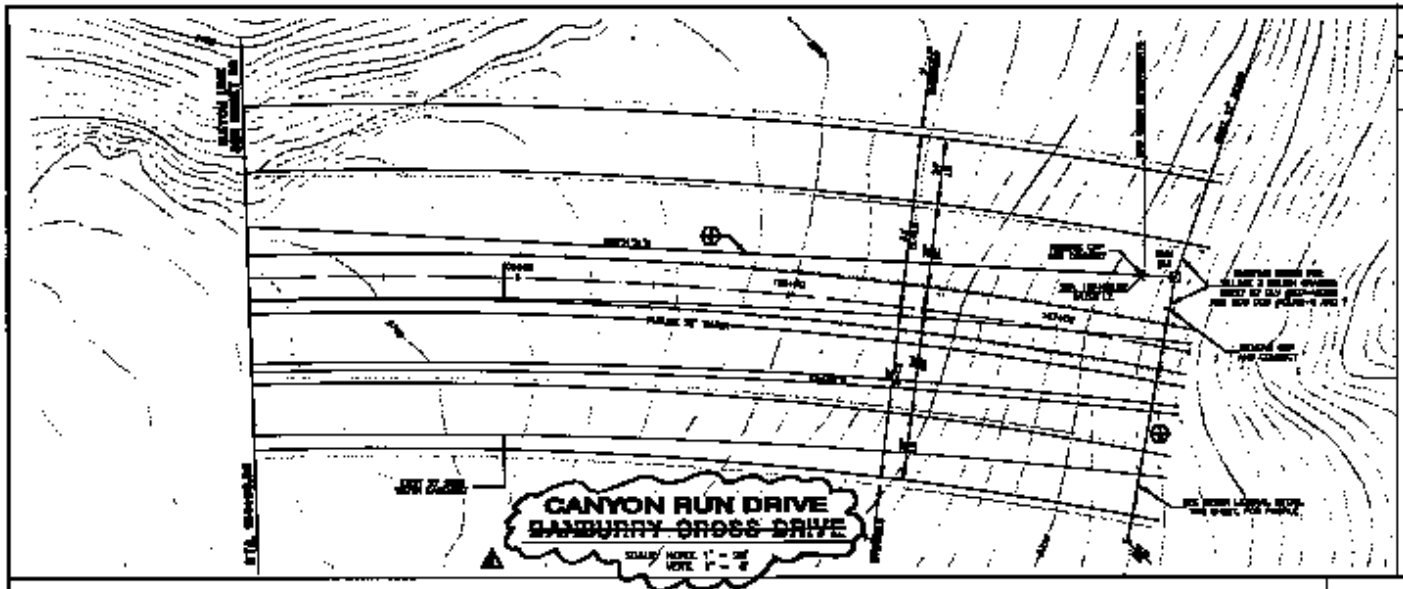

CONSTRUCTION NOTES

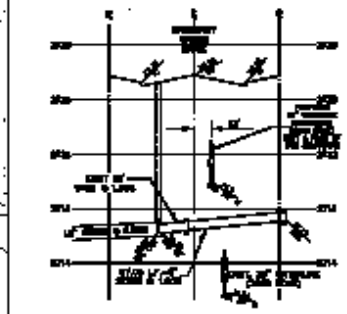

SEWER LATERAL DETAIL @ STA. 107+40.00

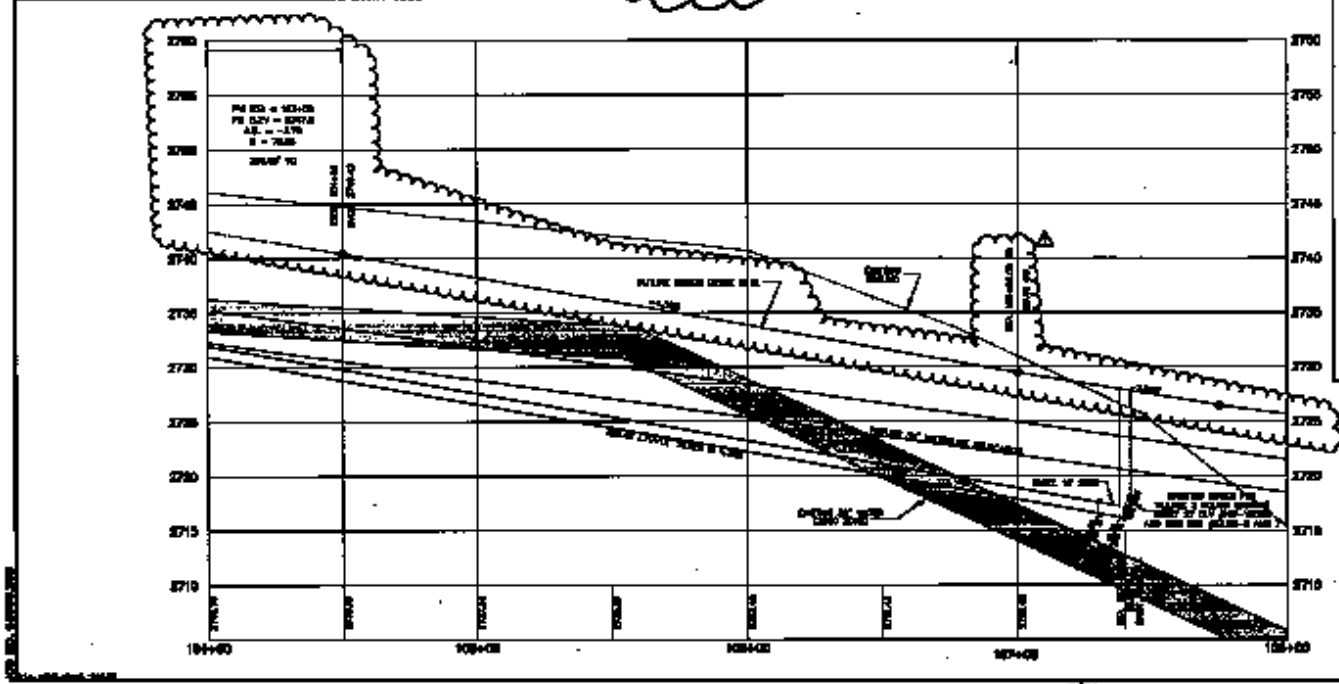

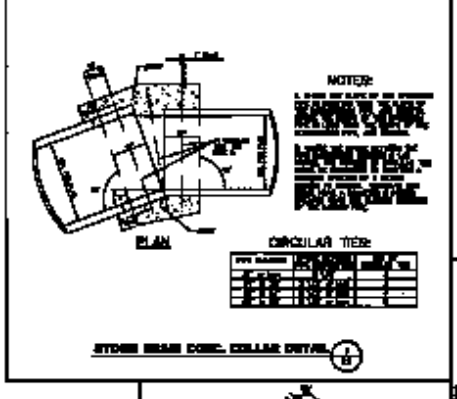

SHEET INDEX MAP

APPROVALS

23