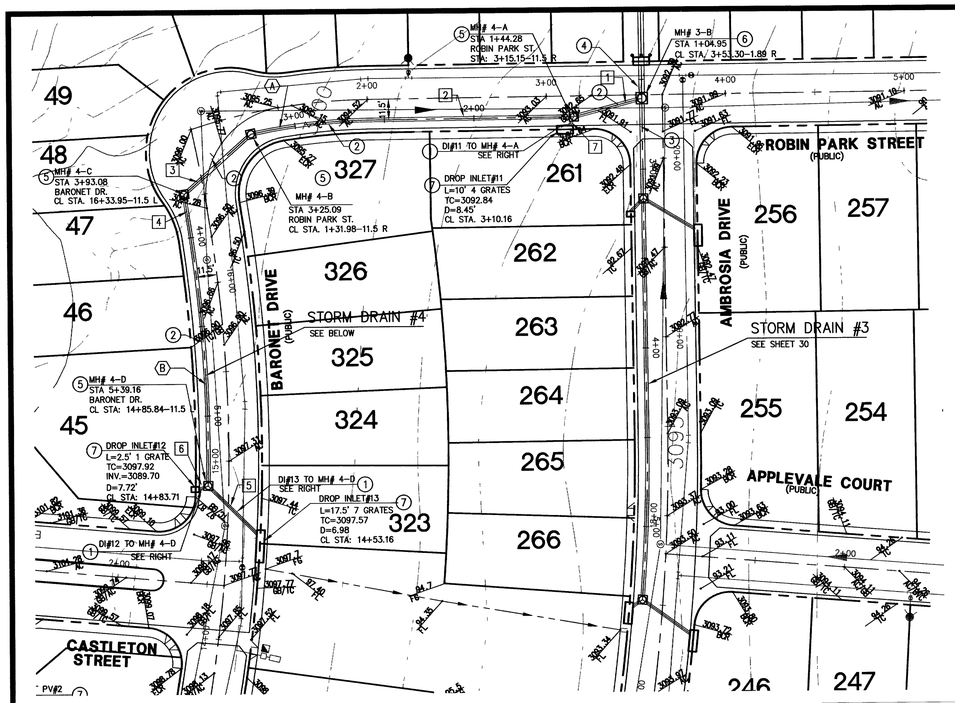

STORM DRAIN LINE 4

SCALE H: 1" = 40'
SCALE V: 1" = 4'

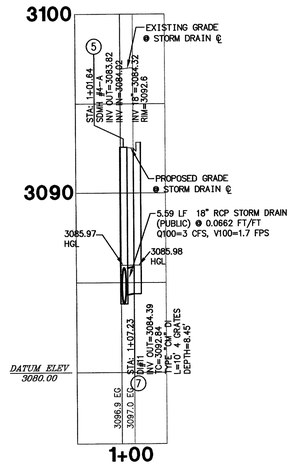

MH 4-A TO DI-11

SCALE H: 1" = 40'
SCALE V: 1" = 4'

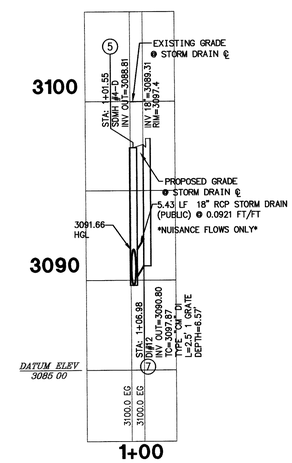

MH 4-D TO DI-12

SCALE H: 1" = 40'
SCALE V: 1" = 4'

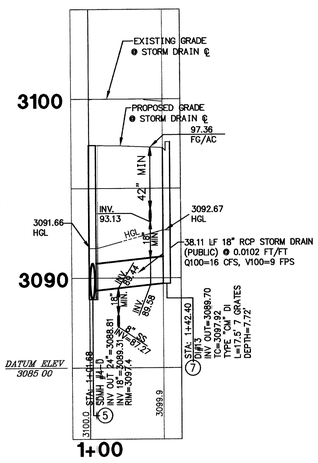

MH 4-D TO DI-13

SCALE H: 1" = 40'
SCALE V: 1" = 4'

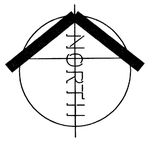

STORM DRAIN LINE 4

SCALE H: 1" = 40'
SCALE V: 1" = 4'

LINE TABLE

	BEARING	LENGTH
1	N75°20'52"E	39.33'
2	N89°29'44"E	114.88'
3	N48°14'59"E	50.37'
4	N08°51'59"W	17.57'
5	N45°05'16"W	38.11'
6	N68°41'01"E	5.43'
7	N26°03'38"E	5.59'

CURVE TABLE

	DELTA	LENGTH	RADIUS	TANGENT
A	11°48'21"	65.94'	320.00'	33.08'
B	10°06'32"	146.09'	828.00'	73.23'

STORMDRAIN MANHOLE COORDINATE SCHEDULE

MH#	NORTHING	EASTING
4-A	N 514858.7385	E 572118.3530
4-B	N 514850.3818	E 571938.0716
4-C	N 514816.8432	E 571900.4950
4-D	N 514653.9060	E 571912.9033
3-B	N 514868.6878	E 572156.4064

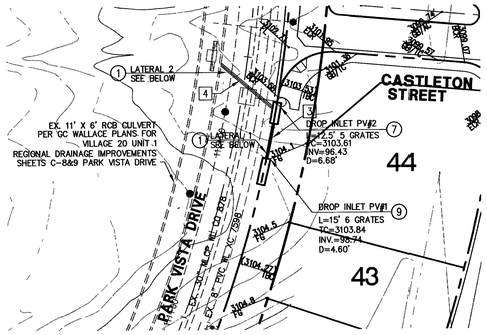

PARK VISTA

SCALE H: 1" = 40'
SCALE V: 1" = 4'

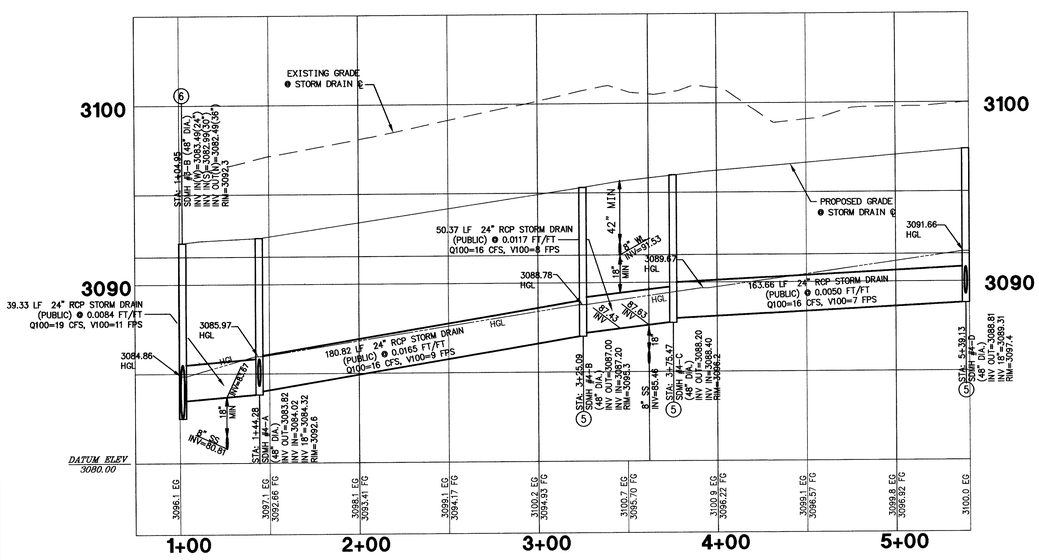

STORM DRAIN LINE 4

SCALE H: 1" = 40'
SCALE V: 1" = 4'

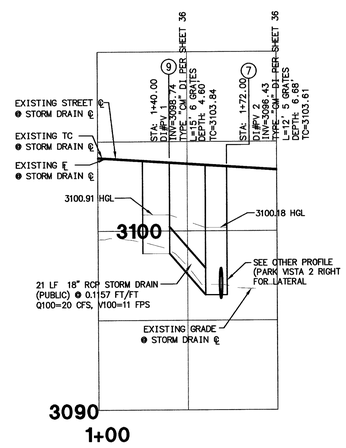

PARK VISTA 1

SCALE H: 1" = 40'
SCALE V: 1" = 4'

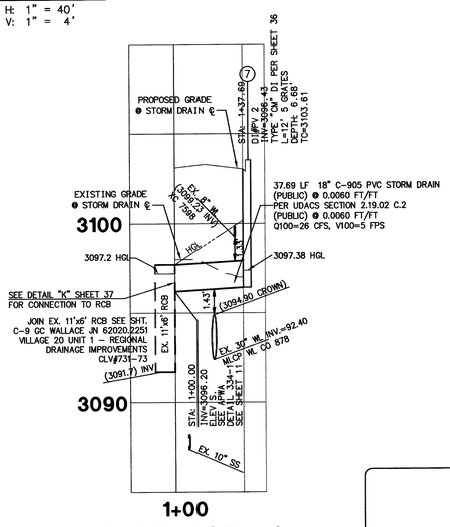

PARK VISTA 2

SCALE H: 1" = 40'
SCALE V: 1" = 4'

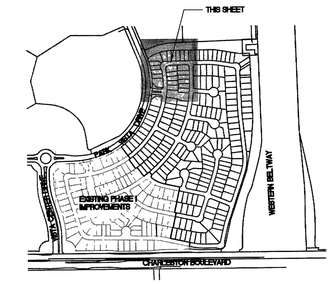

KEY MAP

NOT TO SCALE

BENCHMARK

RIVET AND PLATE IN TOP OF CURB AT NW CORNER OF PAVILION CENTER AND PALO BREA DR (NO. OLVD9 36W4)

3030.95 NAVD 1988 DATUM (923.834 M)

BASIS OF BEARINGS

NORTH 89°45'05" EAST BEING THE SOUTH LINE OF THE SOUTHWEST QUARTER (SW 1/4) OF SECTION 35, TOWNSHIP 20, RANGE 59 EAST, M.D.M. AS SHOWN BY MAP ON FILE IN FILE 91, PAGE 28 OF PARCEL MAPS IN THE CLARK COUNTY RECORDER'S OFFICE, CLARK COUNTY, NEVADA.

CONSTRUCTION NOTES

1. INSTALL 18" RCP STORM DRAIN
2. INSTALL 24" RCP STORM DRAIN
3. INSTALL 30" RCP STORM DRAIN
4. INSTALL 36" RCP STORM DRAIN
5. INSTALL TYPE I MANHOLE PER C.C.A.S.D. #403
6. INSTALL TYPE II MANHOLE PER C.C.A.S.D. #405
7. INSTALL TYPE "CM" DROP INLET PER DETAIL ON SHEET 38
8. INSTALL ALHAMBRA FOUNDRY A-1530 GRATED MANHOLE COVER
9. INSTALL TYPE "CM" DROP INLET PER DETAIL ON SHEET 39

CONTROLLED STRENGTH MATERIAL (CLSM)

PROTECT WATERLINES IN PLACE. WHEREVER A WATERLINE IS ABOVE A STORM DRAIN OR SEWER WHERE COMPACTION REQUIREMENTS UNDER A WATERLINE CANNOT BE MET, BACKFILL TRENCH WITH CLASS I / CLASS II CONTROL LOW STRENGTH MATERIAL (CLSM) TO THE SPRINGLINE OF THE WATERLINE. THIS REQUIREMENT IS FOR STRUCTURAL SOPPORT ONLY. ADDITIONAL HEALTH REQULATIONS MAY APPLY PER UDACS 2.19 ESNO42

ALL SEWER/STORM DRAINS CROSSING WATER LINES MUST CONFORM TO SECTION 2.19 OF THE UNIFORM DESIGN AND CONSTRUCTION STANDARDS FOR POTABLE WATER SYSTEMS (UDACS) FOR WATER AND STORM MAIN CROSSINGS AND CLEARANCES. ESN.064 REVISED 06/01/04

APPROVED FOR CONSTRUCTION

5-31-05
DATE

LAS VEGAS VALLEY WATER DISITRICT PROJ. 110523

10744836-2

REV.	DATE	BY	DESCRIPTION	APPROVE	DATE

SUMMERLIN
RBF CONSULTING
PLANNING ■ DESIGN ■ CONSTRUCTION
8335 WEST FLAMINGO ROAD
LAS VEGAS, NEVADA 89147-4134
702.364.0190 • FAX 702.364.0189 • www.RBF.com

SHEET KINGWOOD - PHASE II STORM DRAIN 4 PLAN AND PROFILE

TITLE VILLAGE 20 AT SUMMERLIN PARCEL E,F & G

DRAWN BY:	DESIGNED BY:	CHECKED BY:	PROJECT NO:	SCALE:
CTC 5/13/05	5/13/05	TLK 5/13/05	50-100450	1" = 40' HORZ. 1" = 4' VERT.

SEAL: REGISTERED PROFESSIONAL ENGINEER MARK W. JOHNSON Exp: 6/30/06 CIVIL No. 12729 STATE OF NEVADA

SHEET 31

31 OF 39 SHEETS

80912

\PDATA\50100450\CADD\LAND\DLV\PHASE 2\X50-2-29SD04.DWG TKEENEY 5/30/05 11:48 am