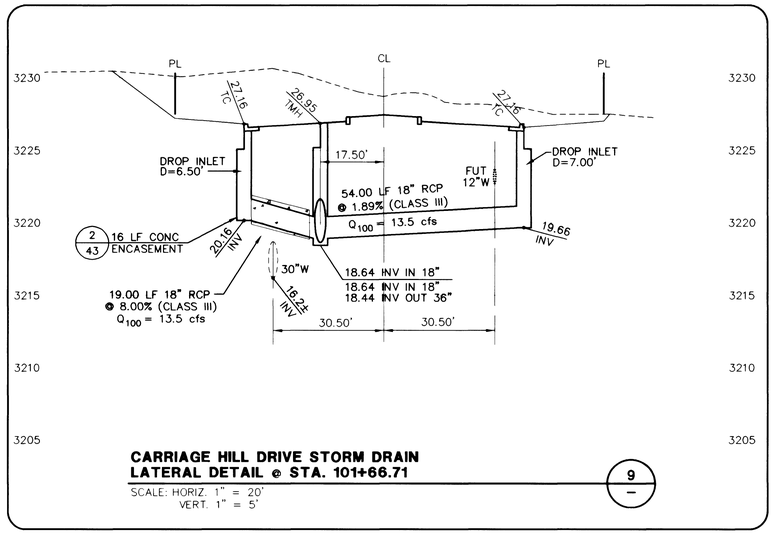

CARRIAGE HILL DRIVE STORM DRAIN
LATERAL DETAIL @ STA. 101+66.71 (9/–)

SCALE: HORIZ. 1" = 20'
VERT. 1" = 5'

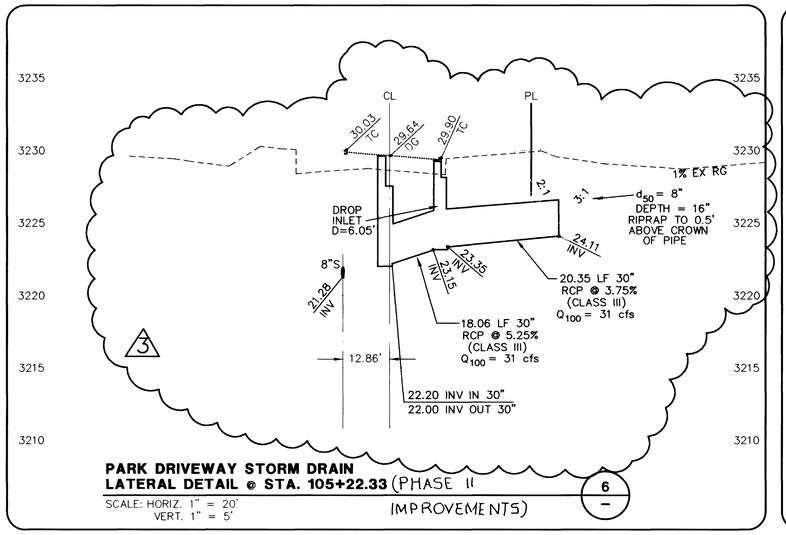

PARK DRIVEWAY STORM DRAIN
LATERAL DETAIL @ STA. 105+22.33 (PHASE II IMPROVEMENTS) (6/–)

SCALE: HORIZ. 1" = 20'
VERT. 1" = 5'

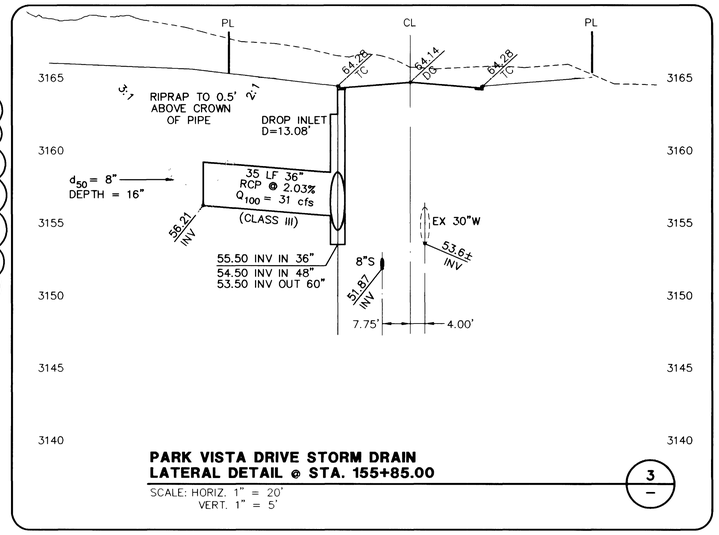

PARK VISTA DRIVE STORM DRAIN
LATERAL DETAIL @ STA. 155+85.00 (3/–)

SCALE: HORIZ. 1" = 20'
VERT. 1" = 5'

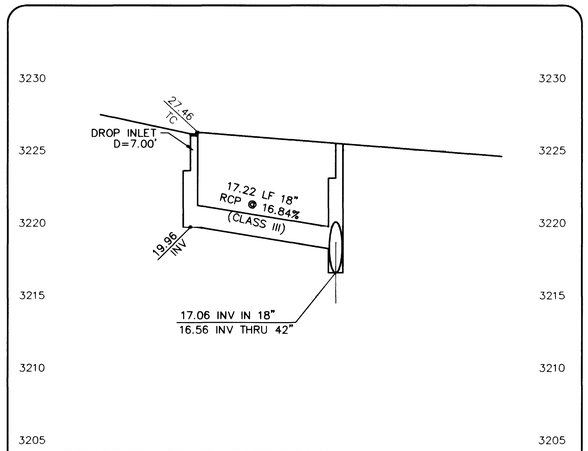

CARRIAGE HILL DRIVE STORM DRAIN
LATERAL DETAIL @ STA. 100+00 (8/–)

SCALE: HORIZ. 1" = 20'
VERT. 1" = 5'

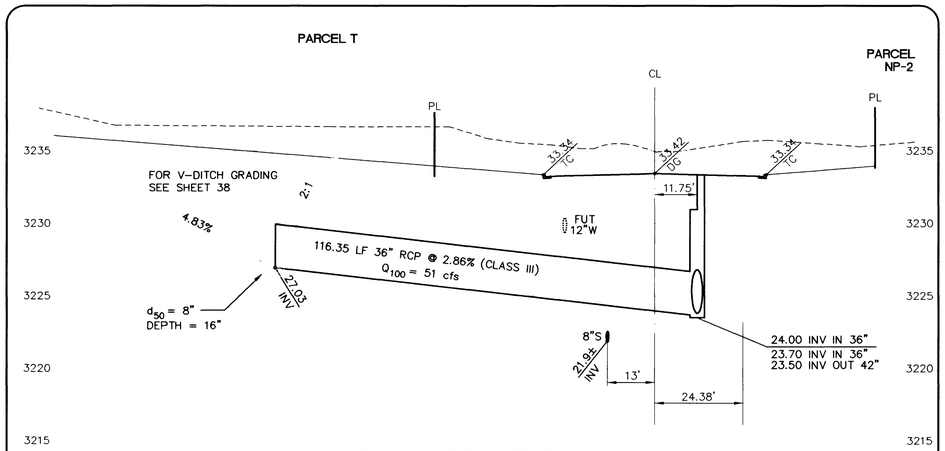

VISTA RUN DRIVE STORM DRAIN
LATERAL DETAIL @ STA. 181+59.48 (5/–)

SCALE: HORIZ. 1" = 20'
VERT. 1" = 5'

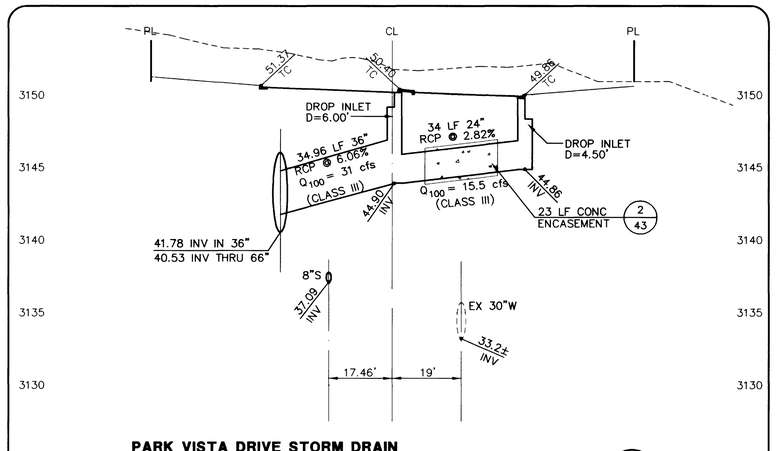

PARK VISTA DRIVE STORM DRAIN
LATERAL DETAIL @ STA. 141+85.00 (2/–)

SCALE: HORIZ. 1" = 20'
VERT. 1" = 5'

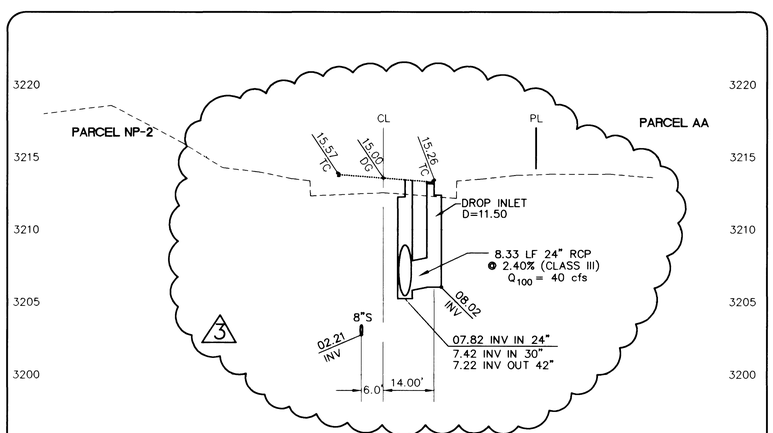

PARK DRIVEWAY STORM DRAIN
LATERAL DETAIL @ STA. 110+58.44 (PHASE II IMPROVEMENTS) (7/–)

SCALE: HORIZ. 1" = 20'
VERT. 1" = 5'

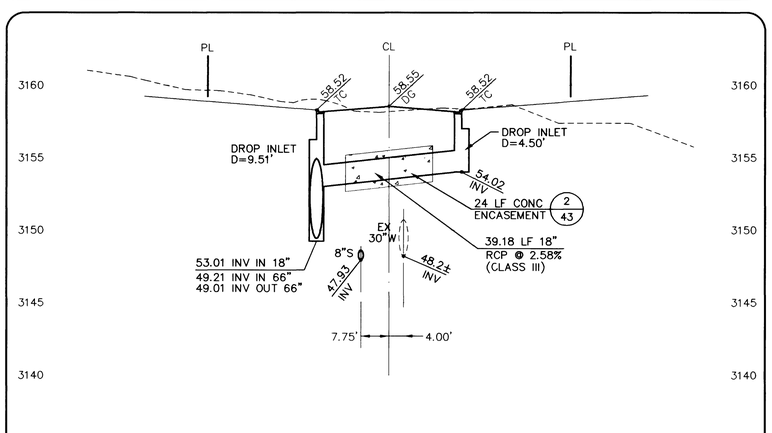

PARK VISTA DRIVE STORM DRAIN
LATERAL DETAIL @ STA. 152+08.00 (4/–)

SCALE: HORIZ. 1" = 20'
VERT. 1" = 5'

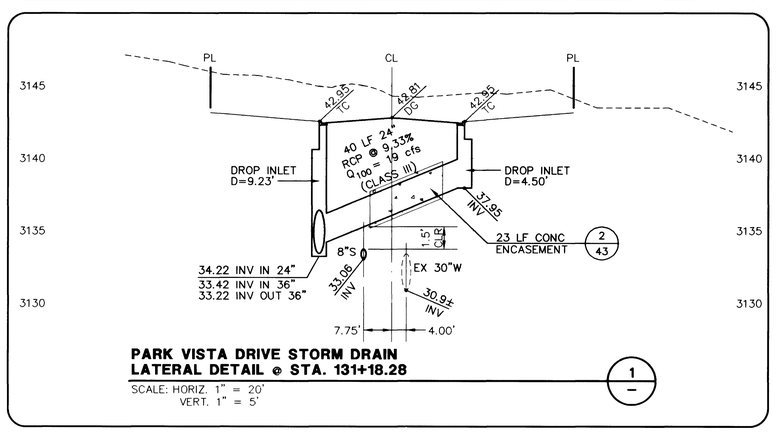

PARK VISTA DRIVE STORM DRAIN
LATERAL DETAIL @ STA. 131+18.28 (1/–)

SCALE: HORIZ. 1" = 20'
VERT. 1" = 5'

APPROVAL: 1ST appl 9-22-00

LAS VEGAS VALLEY WATER DISTRICT — DATE: 11/01/01

360 S9

BERT A. HUGHES — NEVADA PROFESSIONAL ENGINEER — STATE OF NEVADA — No. 10259

DATE: 6/17/01

REV	DATE	DESCRIPTION	DATE	DRWN	APP	DATE	CKD	APP
A	07/17/01	MODIFIED STORM SEWER LOCATION	6/21					

DESIGN: JJ
DRAWN: JMS
CHECK: BAH
ISSUE DATE:
ISSUE EDITOR:
PLOT DATE: 05-30-01
PLOT TIME: 09:16:32
Dcardrier

G.C. WALLACE, INC.
Engineering/Architecture
1555 SOUTH RAINBOW BLVD./LAS VEGAS, NEVADA 89146
TELEPHONE: (702) 804-2000 • FAX: (702) 804-2299

F:\V20\Unit2\dwg\mrpt\V2020039.dwg

SUMMERLIN
VILLAGE 20 - UNIT 2 IMPROVEMENTS
LATERAL DETAILS

SHEET 39 OF 52 SHTS

JOB NO. 62020.222

107-V3364
THIS IS A REPLOT