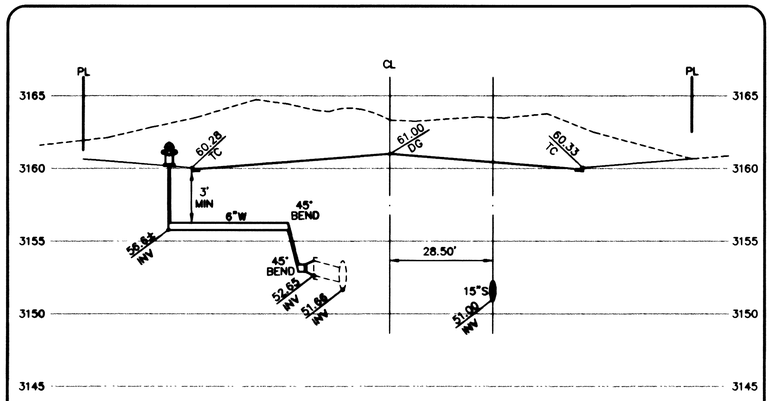

FAR HILLS AVENUE WATER
LATERAL DETAIL • STA. 504+39.48 (9 / –)

SCALE: HORIZ. 1" = 20'
VERT. 1" = 5'

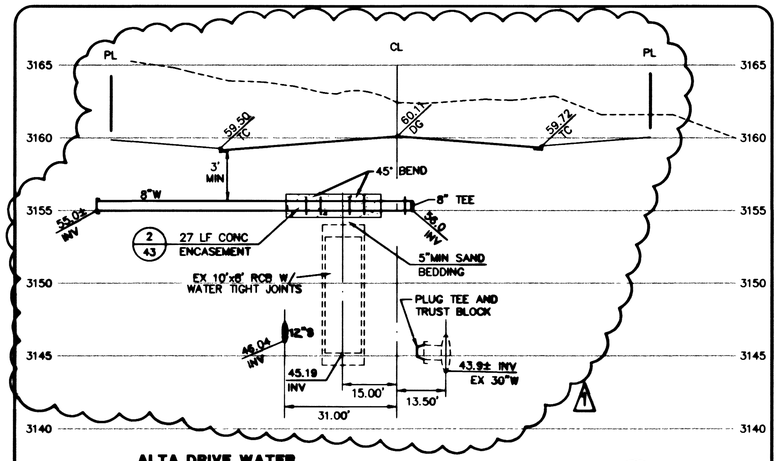

ALTA DRIVE WATER
LATERAL DETAIL • STA. 482+62.06 (6 / –)

SCALE: HORIZ. 1" = 20'
VERT. 1" = 5'

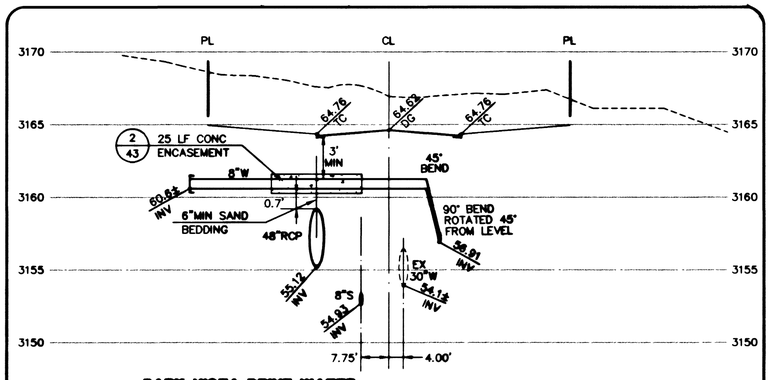

PARK VISTA DRIVE WATER
LATERAL DETAIL • STA. 156+11.00 (3 / –)

SCALE: HORIZ. 1" = 20'
VERT. 1" = 5'

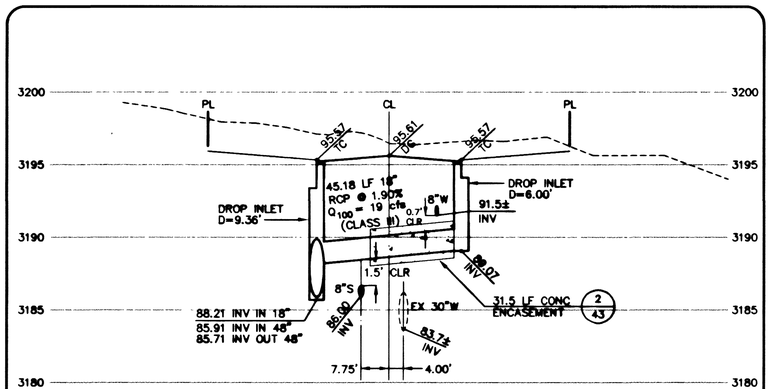

PARK VISTA DRIVE STORM DRAIN
LATERAL DETAIL • STA. 167+40.00 (8 / –)

SCALE: HORIZ. 1" = 20'
VERT. 1" = 5'

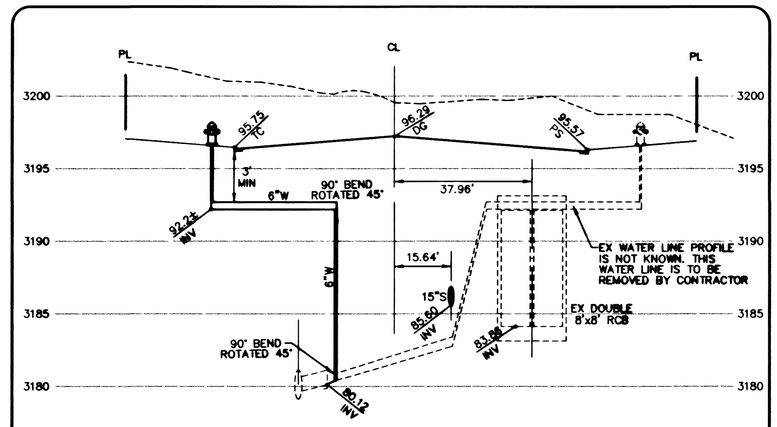

FAR HILLS AVENUE WATER
LATERAL DETAIL • STA. 493+96.32 (5 / –)

SCALE: HORIZ. 1" = 20'
VERT. 1" = 5'

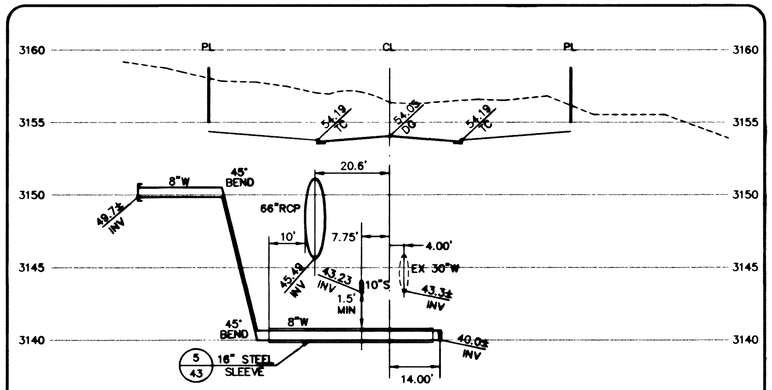

PARK VISTA DRIVE WATER
LATERAL DETAIL • STA. 147+64.50 (2 / –)

SCALE: HORIZ. 1" = 20'
VERT. 1" = 5'

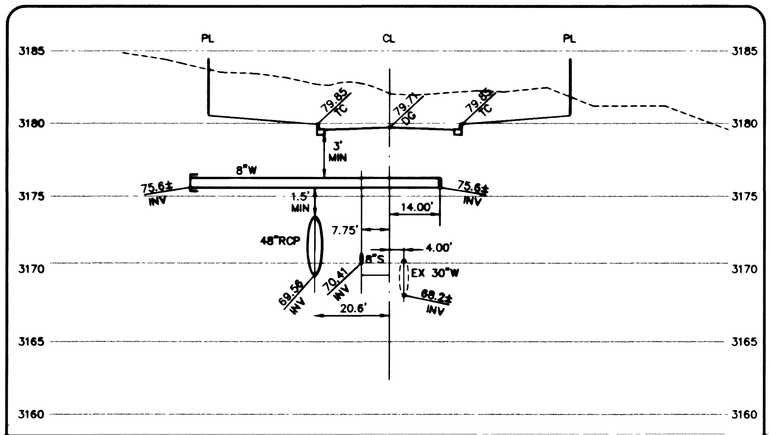

PARK VISTA DRIVE WATER
LATERAL DETAIL • STA. 162+50.28 (7 / –)

SCALE: HORIZ. 1" = 20'
VERT. 1" = 5'

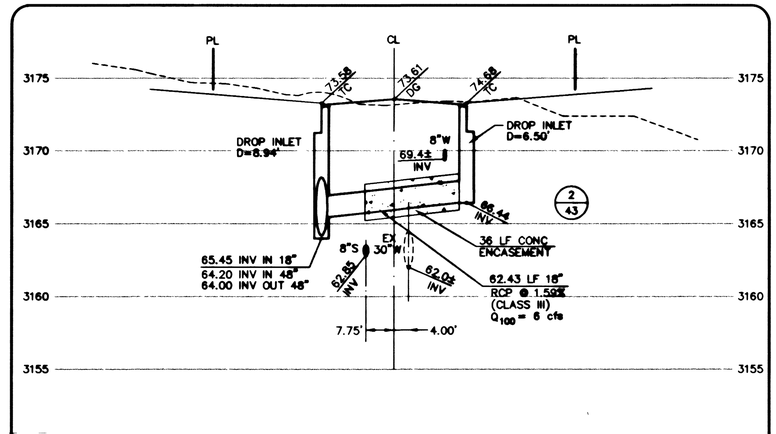

PARK VISTA DRIVE STORM DRAIN
LATERAL DETAIL • STA. 159+85.00 (4 / –)

SCALE: HORIZ. 1" = 20'
VERT. 1" = 5'

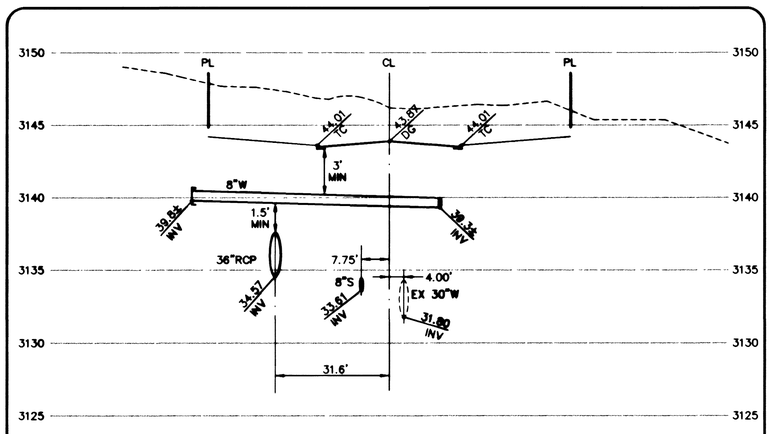

PARK VISTA DRIVE WATER
LATERAL DETAIL • STA. 131+63.24 (1 / –)

SCALE: HORIZ. 1" = 20'
VERT. 1" = 5'

APPROVAL:

Roger Sandoval — INT. APP. 9-22-99
LAS VEGAS VALLEY WATER DISTRICT

1-05-01
DATE

REV.	DATE	DESCRIPTION	DWN.	APP.	DATE	CKW.	APP.
A	01/05/01	CHANGE WATER MAIN TO MATCH FIELD CONDITIONS					

DATE:

DESIGN: JJ
DRAWN: JMS
CHECK: BAH
ISSUE DATE:
ISSUE EDITOR:
PLOT DATE: 01-05-01
PLOT TIME: 08:14:19
dgcr.dwg

G.C. WALLACE, INC.
Engineering/Architecture
1555 SOUTH RAINBOW BLVD./LAS VEGAS, NEVADA 89146
TELEPHONE (702) 804-2000 • FAX: (702) 804-2299
F:\V20\Unit2\dwg\V20020.dgn

SUMMERLIN
VILLAGE 20 - UNIT 2 IMPROVEMENTS
LATERAL DETAILS

SHEET 40
40 OF 52 SHTS

JOB NO. 62020.222

107V3364
REPLOT