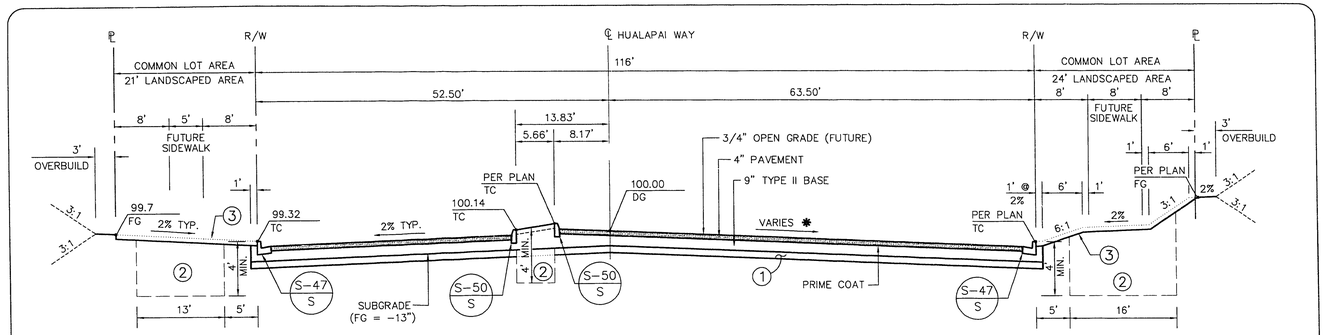


**STA. 104+62.75 TO STA. 106+85.97**

## HUALAPAI WAY TYPICAL SECTION

NOT TO SCALE

D 19

✱ WEST SIDE ONLY
CROSS SLOPE TRANSITION FROM
-2.00% @ STA. 105+50 TO
-0.50% @ STA. 106+85.97

NOTES:
1. SCARIFY NATIVE 6" AND RECOMPACT TO 95%.
2. LANDSCAPE AREA: EXCAVATED AND RECOMPACT TO 85%, OR RIP ENTIRE AREA TO DEPTH INDICATED.
3. ROUGH GRADE (R.G.) TO BE 4" BELOW FINISH GRADE (F.G.) FOR FUTURE LANDSCAPE PURPOSES.

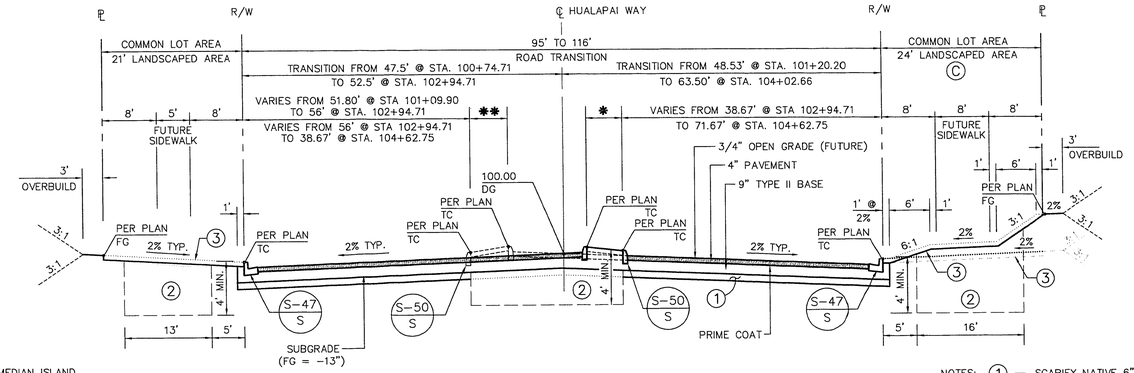


✱ MEDIAN ISLAND
VARIES FROM 6.13' @ STA 101+09.90 TO 10.33' @ STA. 102+94.71

✱✱ MEDIAN ISLAND
VARIES FROM 10.33' @ STA 102+94.71 TO 5.66' @ STA. 104+62.75

Ⓒ LANDSCAPE SLOPE TRANSITION FROM 101+20.20 TO 102+00 SEE PLAN

**STA. 100+74.71 TO STA. 104+62.75**

## HUALAPAI WAY TYPICAL SECTION

NOT TO SCALE

C 19

NOTES:
1. SCARIFY NATIVE 6" AND RECOMPACT TO 95%.
2. LANDSCAPE AREA: EXCAVATED AND RECOMPACT TO 85%, OR RIP ENTIRE AREA TO DEPTH INDICATED.
3. ROUGH GRADE (R.G.) TO BE 4" BELOW FINISH GRADE (F.G.) FOR FUTURE LANDSCAPE PURPOSES.

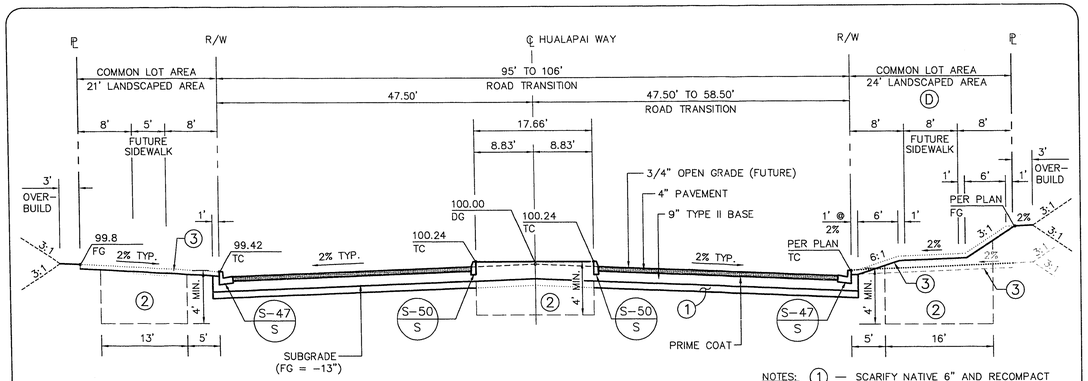


**STA. 95+85.64 TO STA. 99+84.82**

## HUALAPAI WAY TYPICAL SECTION

NOT TO SCALE

B 19

Ⓓ LANDSCAPE SLOPE TRANSITION FROM 99+00 TO 99+84.82 SEE PLAN

NOTES:
1. SCARIFY NATIVE 6" AND RECOMPACT TO 95%.
2. LANDSCAPE AREA: EXCAVATED AND RECOMPACT TO 85%, OR RIP ENTIRE AREA TO DEPTH INDICATED.
3. ROUGH GRADE (R.G.) TO BE 4" BELOW FINISH GRADE (F.G.) FOR FUTURE LANDSCAPE PURPOSES.

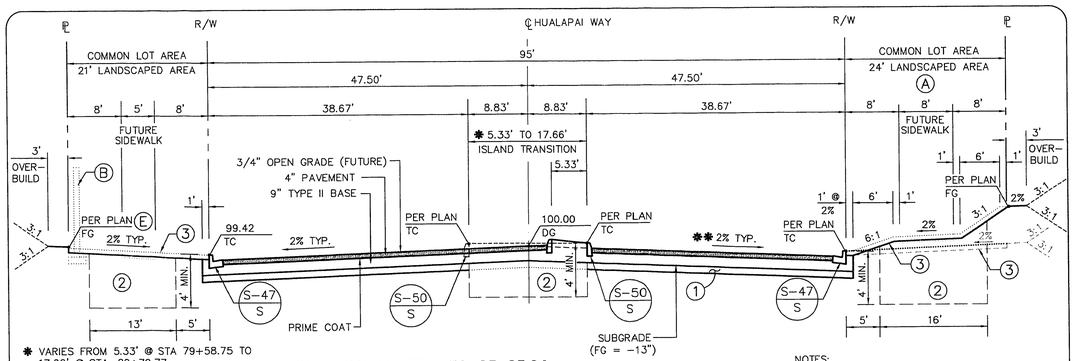


✱ VARIES FROM 5.33' @ STA 79+58.75 TO 17.66' @ STA. 80+79.77

✱✱ WEST SIDE ONLY
CROSS SLOPE TRANSITION FROM
1.50% @ STA. 76+20.60
-2% @ STA. 77+41.73

Ⓐ LANDSCAPE SLOPE TRANSITION FROM 76+20.60 TO 77+00; 85+50 TO 86+50 AND 91+00 TO 92+00 SEE PLAN
ALL LANDSCAPE SLOPES ARE AT 2% UNLESS OTHERWISE NOTED

Ⓑ RETAINING WALL BY OTHERS FROM 91+00 TO 92+00; 93+20 TO 96+10 AND 97+30 TO 98+90 SEE PLAN

Ⓔ LANDSCAPE SLOPE VARIES FROM 76+20.60 TO 79+20 HOLDING 00.7 FG @ PL (SLOPE VARIES FROM 2% TO 5.60% @ LOW POINT)

**STA. 76+20.60 TO STA. 95+85.64**

## HUALAPAI WAY TYPICAL SECTION

NOT TO SCALE

A 19

NOTES:
1. SCARIFY NATIVE 6" AND RECOMPACT TO 95%.
2. LANDSCAPE AREA: EXCAVATED AND RECOMPACT TO 85%, OR RIP ENTIRE AREA TO DEPTH INDICATED.
3. ROUGH GRADE (R.G.) TO BE 4" BELOW FINISH GRADE (F.G.) FOR FUTURE LANDSCAPE PURPOSES.

| REV. | DATE | DESCRIPTION | DATE | APPROVAL |
|---|---|---|---|---|
| | | | | |

RECOMMENDED
BERT A. HUGHES 5/5/98

BERT A. HUGHES
NEVADA REGISTERED PROFESSIONAL ENGINEER
STATE OF NEVADA
5/5/98

G.C. WALLACE, INC.
Engineering/Architecture
1555 SOUTH RAINBOW BLVD/LAS VEGAS, NEVADA 89102

**SUMMERLIN**
**VILLAGE 3 HUALAPAI WAY IMPROVEMENTS**
**TYPICAL STREET SECTIONS**

SHEET
**19**
SHT 19 OF 20

JOB NO. 62012.223
May 25, 1998 5:39:17 p.m. 01/DSB Drawing: C:\DWG\V6.12\HW-90\VHW25519.DWG

31-2-180 107-V2542