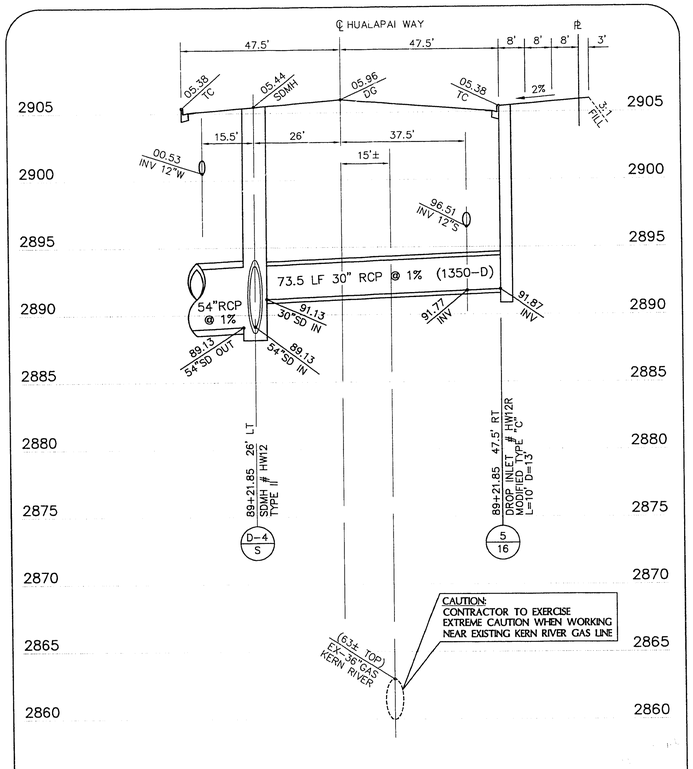

STA 89+21.85; 26' LT TO 47.50' RT @ SDMH # HW12
30" STORM DRAIN LATERAL W/D.I. # HW12R (6/17)

SCALE : HORIZ. 1" = 20'
VERT. 1" = 5'

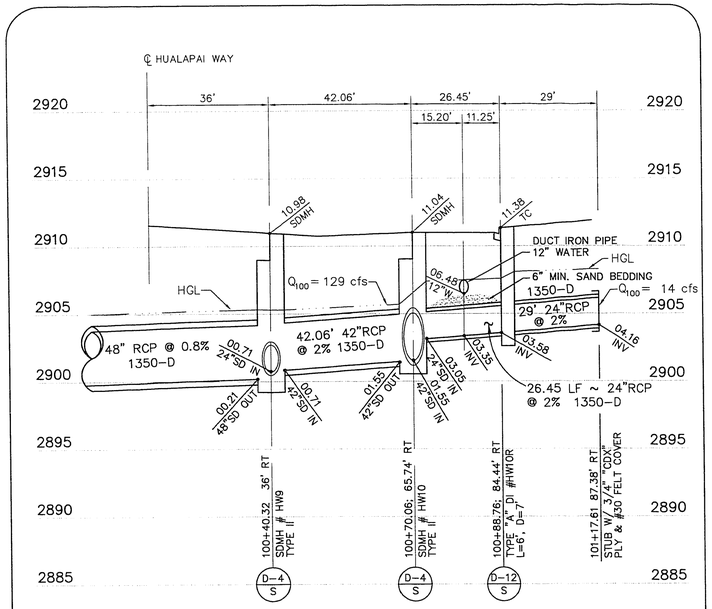

STA 100+40.32; 36' RT TO STA 101+17.61; 87.38' RT @ SDMH HW9
42" & 24" STORM DRAIN LATERAL W/D.I. # HW10R (4/17)

SCALE : HORIZ. 1" = 20'
VERT. 1" = 5'

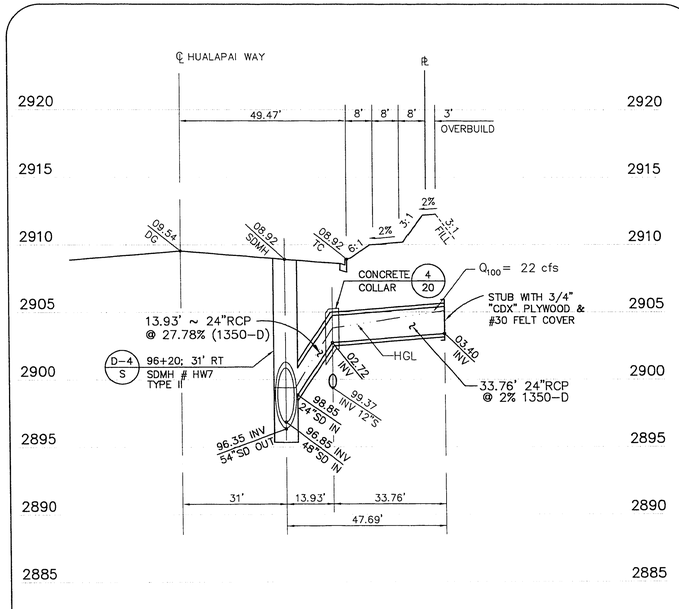

STA 96+20; 31' RT TO 78.69' RT @ SDMH #HW7
24" STORM DRAIN LATERAL (2/17)

SCALE : HORIZ. 1" = 20'
VERT. 1" = 5'

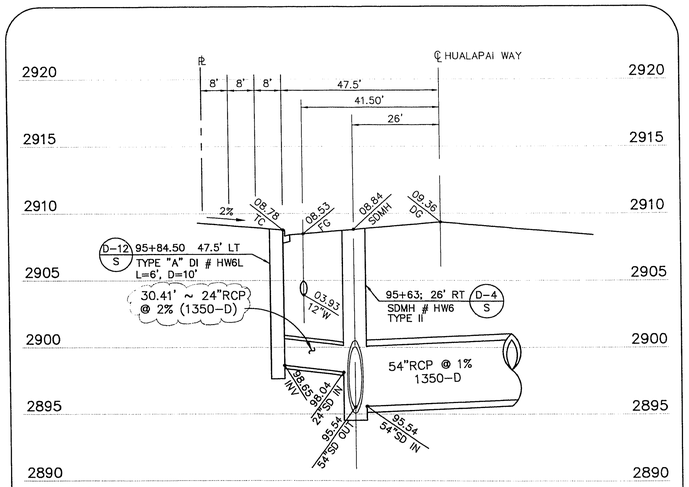

STA 95+84.50; 47.5' LT TO STA 95+63; 26' LT @ SDMH #HW6
24" STORM DRAIN LATERAL W/D.I. # HW6L (5/17)

SCALE : HORIZ. 1" = 20'
VERT. 1" = 5'

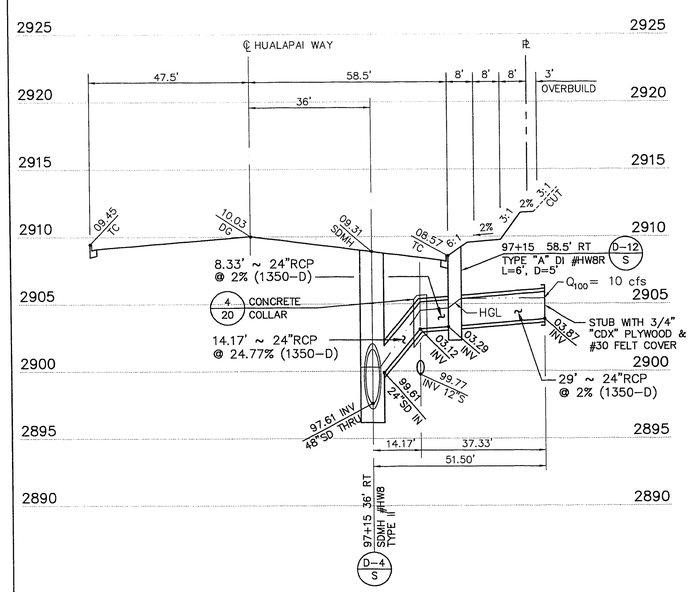

STA 97+15; 36'RT TO 87.50' RT @ SDMH #HW8
24" STORM DRAIN LATERAL W/D.I. # HW8R (3/17)

SCALE : HORIZ. 1" = 20'
VERT. 1" = 5'

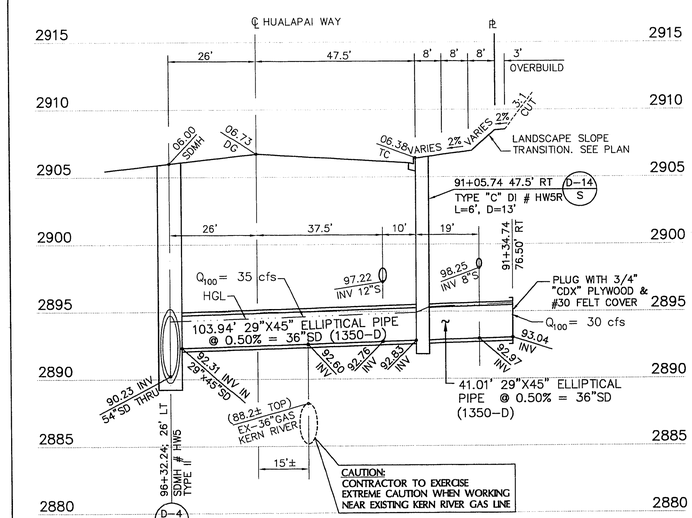

APPROVED FOR CONSTRUCTION
LVVWD DATE 6/18/96

SCALE 20 0 20 40 FEET

STA 90+32.24; 26.00' LT TO 91+34.74; 76.50' RT @ SDMH #HW5
24" STORM DRAIN LATERAL W/D.I. # HW5R (1/17)

SCALE : HORIZ. 1" = 20'
VERT. 1" = 5'

REV.	DATE	DESCRIPTION	APPROVAL	DATE

RECOMMENDED FOR APPROVAL
BERT A. ... CIVIL ENGINEER
NEVADA REG. NO. 9113
DATE 6/14/96

G.C. WALLACE, INC.
Engineering/Architecture 1555 SOUTH RAINBOW BLVD/LAS VEGAS, NEVADA 89102

SUMMERLIN
VILLAGE 12 HUALAPAI WAY IMPROVEMENTS
STORM DRAIN LATERAL DETAILS

SHEET **17**
SHT 17 OF 20

JOB NO. 62012.223 10-35-58 a.m. QT Drawing: C:\DWG\V6\12\VW-SD\VW12LA17.DWG

31-2-17-6 107-V2542