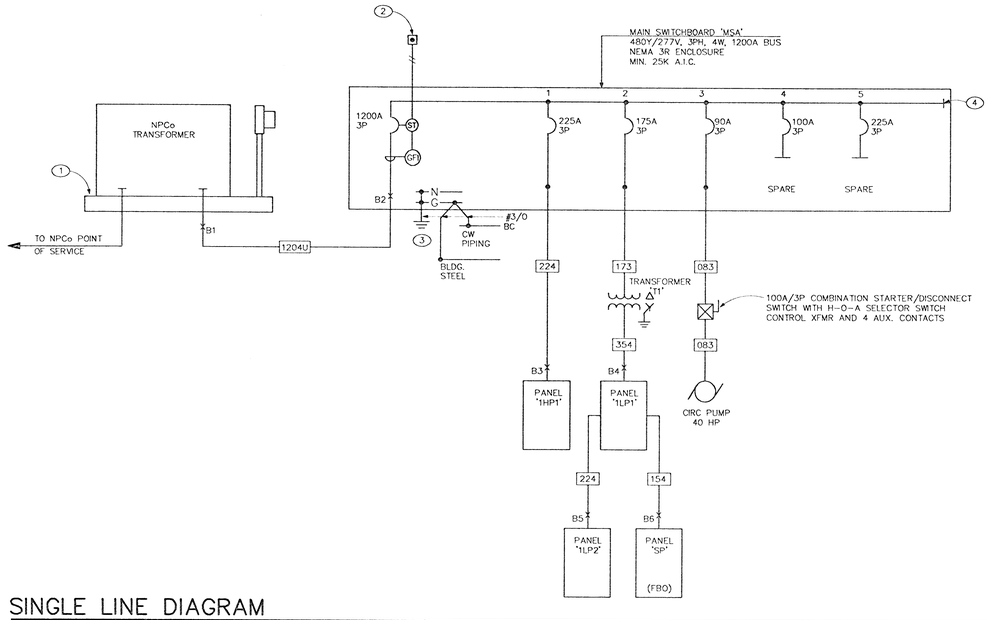

SINGLE LINE DIAGRAM

NO SCALE

SHEET NOTES

1. UTILITY COMPANY PAD MOUNTED TRANSFORMER, WITH METERING 480Y/277V, 3ø, 4W SECONDARY. PROVIDE CONCRETE EQUIPMENT PAD PER UTILITY REQUIREMENTS.
2. PROVIDE REMOTE SHUNT TRIP IN WP ENCLOSURE PER BUILDING DEPARTMENT REGULATIONS. SEE SHEET E3.01 FOR LOCATION.
3. PROVIDE CONCRETE ENCASED GROUNDING ELECTRODE CONSISTING OF MIN. 20' #3 BC, INSTALLED PER NEC ARTICLE 250-81(c).
4. PROVIDE PROVISIONS FOR FUTURE BUS EXTENSION.

11/2/99 5:44 PM (NEW)

PANELBOARD 1HP1 SCHEDULE

VOLTAGE: 277/480V,3Ph,4W
BUS RATING: 225
MAINS: 225A MLO
TYPE: BOLT ON
LOCATION: ELECTRICAL ROOM
ENCLOSURE: NEMA 1
MOUNTING: SURFACE
MIN. AIC: 18000 (1)

LOAD – VA

CIRCUIT DESCRIPTION	BKR	CKT NUM	PHASE A	PHASE B	PHASE C	CKT NUM	BKR	CIRCUIT DESCRIPTION
LIGHTS	20	1	3880			90		
		1	20415			2		GP-1
LIGHTS	20	3		2150				
		1		20415		4		
LIGHTS	20	5			1995			
		1			20415	6	3	
EXTERIOR LIGHTS	20	7	780					
		1				8		SPACE
LIGHTS	20	9		1830				
		1				10		SPACE
LIGHTS	20	11			2310			
		1				12		SPACE
SPARE	20	13						
		1				14		SPACE
LIGHTS	20	15		300				
		1				16		SPACE
SPARE	20	17						
		1				18		SPACE
SPARE	20	19						
		1				20		SPACE
SPARE	20	21						
		1				22		SPACE
SPARE	20	23						
		1				24		SPACE
SPARE	20	25						
		1				26		SPACE
SPARE	20	27						
		1				28		SPACE
SPARE	20	29						
		1				30		SPACE
SPARE	20	31						
		1				32		SPACE
SPACE								
		33				34		SPACE
SPACE								
		35				36		SPACE
SPACE								
		37				38		SPACE
SPACE								
		39				40		SPACE
SPACE								
		41				42		SPACE
FEED THROUGH LOAD								
CONNECTED LOAD			25075	24695	24720	OPTIONS		
DEMAND LOAD			25075	24695	24720			
DESIGN LOAD			26243	25765	25796			
LINE AMPS			94.7	93.0	93.1			
DESIGN LOAD KVA				77.80				

10/21/99 10:51 AM (NEW)

PANELBOARD 1LP1 SCHEDULE

VOLTAGE: 120/208V,3Ph,4W
BUS RATING: 400
MAINS: 350A MCB
TYPE: BOLT ON
LOCATION: STORAGE 112
ENCLOSURE: NEMA 1
MOUNTING: SURFACE
MIN. AIC: 10000

LOAD – VA

CIRCUIT DESCRIPTION	BKR	CKT NUM	PHASE A	PHASE B	PHASE C	CKT NUM	BKR	CIRCUIT DESCRIPTION
RECEPTS – TELEPHONE	20	1	500				20	
	1		1000			2	1	VENDING
RECEPTS	20	3		900			20	
	1			1000		4	1	VENDING
RECEPTS	20	5			900		20	
	1				1000	6	1	VENDING
RECEPTS	20	7	900				20	
	1		1176			8	1	EF-4
RECEPTS	20	9		900			20	
	1			1620		10	1	EF-2,3
RECEPTS	20	11			900		20	
	1				696	12	1	EF-1
RECEPTS	20	13	720				20	
	1		1008			14	1	EVAP COOLER EC-1
RECEPTS	20	15		720			35	
	1			2361		16		AC-1
RECEPTS	20	17			900			
	1				2361	18	2	
RECEPTS	20	19	720				20	
	1		720			20	1	RECEPTS – ROOFTOP
RECEPTS	20	21		540			20	
	1			200		22	1	DUCT DETECTOR
ELECTRIC WALL HEATER	20	23			1500		20	
	1				1000	24	1	RECEPTS
WATER HEATER/CIRC PUMPS	20	25	1256				20	
	1		1000			26	1	RECEPTS
REFRIGERATOR	20	27		1000			20	
	1			1000		28	1	RECEPTS
FAX	20	29			1000		20	
	1				500	30	1	FIRE MONITORING PANEL
COPIER	20	31	1500				225	
	1		6828			32		PANEL 1LP2
RECEPTS	20	33		1000				
	1			5972		34		
RECEPTS	20	35			1000			
	1				6126	36	3	
RECEPTS	20	37	1000				150	
	1		13300			38		PANEL SP
REMOTE CHILLER	20	39		660				
	1			13000		40		
REMOTE CHILLERS (2)	20	41			1320			
	1				12075	42	3	
FEED THROUGH LOAD								
CONNECTED LOAD			31628	30873	31278	OPTIONS		
DEMAND LOAD			28688	28556	29397			
DESIGN LOAD			28688	28556	29397			
LINE AMPS			238.9	237.8	244.8			
DESIGN LOAD KVA				86.64				

* PROVIDE LOCKABLE CIRCUIT BREAKER

10/21/99 10:53 AM (NEW)

PANELBOARD 1LP2 SCHEDULE

VOLTAGE: 120/208V,3Ph,4W
BUS RATING: 225
MAINS: 225A MLO
TYPE: BOLT ON
LOCATION: STORAGE 112
ENCLOSURE: NEMA 1
MOUNTING: SURFACE
MIN. AIC: 10000

LOAD – VA

CIRCUIT DESCRIPTION	BKR	CKT NUM	PHASE A	PHASE B	PHASE C	CKT NUM	BKR	CIRCUIT DESCRIPTION
SWIMSUIT EXTRACTOR	20	1	1000				20	
	1		1352			2	1	HP-1
SWIMSUIT EXTRACTOR	20	3		1000				
	1			1352		4	2	
RECEPTS	20	5			500		20	
	1				826	6	1	FC-1
RECEPTS	20	7	500					
	1		826			8	2	
RECEPTS	20	9		500			20	
	1			720		10	1	RECEPTS
HAND DRYER	30	11			2400		15	
	1				113	12	1	EF-5
HAND DRYER	30	13	2400					
	1					14		SPACE
HAND DRYER	30	15		2400				
	1					16		SPACE
HAND DRYER	30	17			2400			
	1					18		SPACE
EWC	20	19	750					
	1					20		SPACE
SPARE	20	21						
	1					22		SPACE
SPARE	20	23						
	1					24		SPACE
SPARE	20	25						
	1					26		SPACE
SPARE	20	27						
	1					28		SPACE
SPARE	20	29						
	1					30		SPACE
SPARE	20	31						
	1					32		SPACE
SPARE	20	33						
	1					34		SPACE
SPARE	20	35						
	1					36		SPACE
SPARE	20	37						
	1					38		SPACE
SPARE	20	39						
	1					40		SPACE
SPARE	20	41						
	1					42		SPACE
FEED THROUGH LOAD								
CONNECTED LOAD			6828	5972	6239	OPTIONS		
DEMAND LOAD			6828	5972	6239			
DESIGN LOAD			6828	5972	6239			
LINE AMPS			56.9	49.7	52.0			
DESIGN LOAD KVA				19.04				

THREE-PHASE TRANSFORMER SCHEDULE

TAG	KVA RATING	VOLTAGE HIGH	VOLTAGE LOW	FLA HIGH	FLA LOW	GROUNDING ELECTRODE NEC 250-94	NOTES
T1	112.5	480	208/120	135	312	#1/0 AWG	115

NOTES TO TRANSFORMER SCHEDULE

115 TRANSFORMER SHALL BE RATED 115 DEGREES C RISE

MAIN SWITCHBOARD "MSA" LOAD CALC

DISCRIPTION	VOLT AMPS	QUANTITY	DEMAND	TOTAL
LIGHTING	3.0	34,350 SF	125%	128,812.50
RECEPTACLE	1.5	34,350 SF	100%	51,525.00
MISCELLANEOUS	5.0	34,350 SF	100%	171,750.00
HVAC	12.0	34,350 SF	100%	412,200.00
SIGN	1500.0	1 LS	100%	1,500.00
25% LARGEST MOTOR	10806.0	1 LS	100%	10,806.00
480 VOLTS 3PH, 4W				
TOTAL VOLT AMPS =				776,594
TOTAL KVA =				777
TOTAL AMPERES =				934.10

(1)

10/21/99 9:12 AM

FEEDER SCHEDULE

Feeder Tag	Conduit and THHN/THWN Wire (90 Deg.C Cu)
021	3/4"C – 2 #12 & 1 #12 GND
031	3/4"C – 2 #10 & 1 #10 GND
033	3/4"C – 3 #10 & 1 #10 GND
083	1-1/4"C – 3 #3 & 1 #8 GND
103	1-1/2"C – 3 #2 & 1 #8 GND
154	2"C – 4 #1/0 & 1 #6 GND
173	2"C – 3 #2/0 & 1 #6 GND
224	2-1/2"C – 4 #4/0 & 1 #4 GND
354	(2) 2"C – 4 #2/0 & 1 #3 GND
1204U	(4) 3-1/2"C – 4 #350KCMIL & (1) 3-1/2"C Spare

SHORT CIRCUIT AND VOLTAGE DROP ANALYSIS

BUS	DESCRIPTION	Isc (AT BUS)	VOLTAGE DROP	% DROP
B1	UTILITY	18042	–	–
B2	MSA	17090	1.52	0.32%
B3	1HP1	16291	0.12	0.03%
B4	1LP1	5886	0.08	0.04%
B5	1LP2	5810	0.09	0.04%
B6	SP	5397	0.36	0.17%

PLAN APPROVED
ELECTRICAL
Building & Safety Dept.
City of Las Vegas
DATE DEC 15 1999
Does Not Include Structural, Architectural, Plumbing/Mechanical or Civil Dpt
Improvements Made No Change
Without Approval Plan Is
Not a Permit to Violate Any Ordinance

RECEIVED
DEC - 7 1999
CITY OF LAS VEGAS
CENTRAL PERMITS

LUCCHESI GALATI®

STATE OF NEVADA
ENGINEER
ELECTRICAL
No. 12282
EXPIRES 6/30/00

C. HARRIS P.E.
CONSULTING ENGINEERS
772 East Twain Avenue, Suite 1
Las Vegas, Nevada 89119
(702) 263-7111
PROJECT NO: 38235.00
DESIGNED BY: A. SCHAEFER
CHECKED BY: C. HARRIS
DRAWN BY: D. ELEFTHERIS
500 PILOT ROAD • SUITE A • LAS VEGAS, NEVADA 89119 • PHONE (702) 263-7111 FAX • (702) 263-8111

SINGLE LINE DIGRAM AND SCHEDULES

SUMMERLIN ARBORS PARK
POOL AND POOL BUILDING

Revisions: 1 11-5-99 PLAN CHECK COMMENTS

Date: 10-22-99
Project No. 38235.00
Scale: NO SCALE
Drawn By: KKK

Sheet Number: E5.01