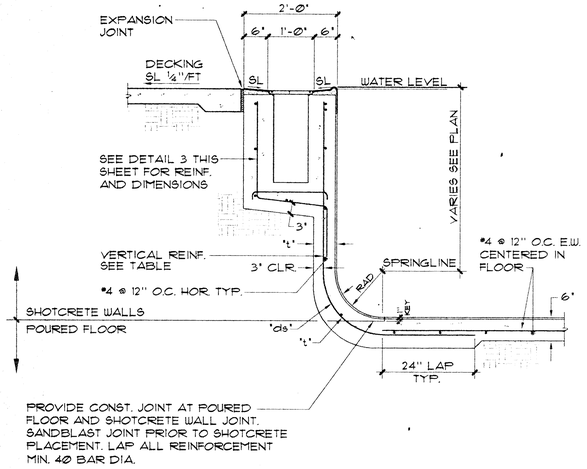

1 **TYP. RIM FLOW POOL WALL 3'-0" TO 5'-0"** ¾"=1'-0"

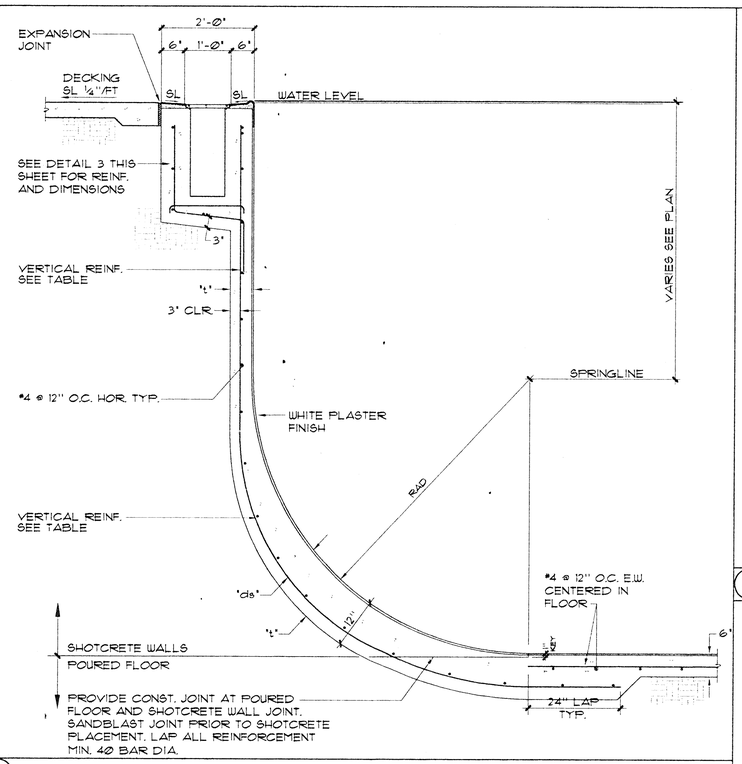

2 **TYP. RIM FLOW POOL WALL 5'-0" TO 12'-0"** ¾"=1'-0"

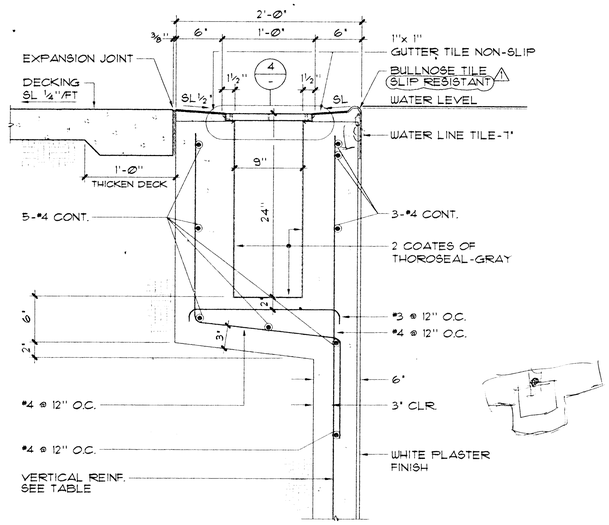

3 **RIM FLOW GUTTER** 1½"=1'-0"

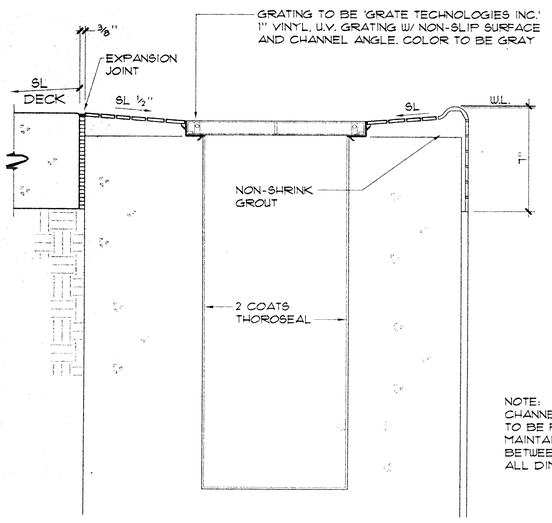

NOTE:
CHANNEL & ANGLE ASSEMBLY TO BE FABRICATED TO MAINTAIN CONSTANT DISTANCE BETWEEN ANGLES. VERIFY ALL DIMENSIONS PRIOR TO CONST.

4 **RIM FLOW GUTTER GRATE** 3"=1'-0"

REINFORCEMENT TABLE

WATER DEPTH	't'	'ds'	RADIUS	VERTICAL REINF.	HORIZONTAL REINF.
0' TO 3'-6"	6"	3"	6"	#4 @ 12" O.C.	#4 @ 12" O.C.
3'-6" TO 5'-0"	7"	4"	6"TO 12"	#4 @ 12" O.C.	#4 @ 12" O.C.
5'-0" TO 8'-0"	8"	5"	12"TO 3'-0"	#4 @ 6" O.C.	#4 @ 12" O.C.
8'-0" TO 10'-0"	10"	7"	3'-0"TO 4'-0"	#4 @ 4" O.C.	#4 @ 8" O.C.
10'-0" TO 12'-0"	11"	8"	4'-0"TO 6'-0"	#4@12" O.C. WITH 2 #5 BETWEEN	#4 @ 8" O.C.

5 **REINFORCEMENT TABLE** NO SCALE

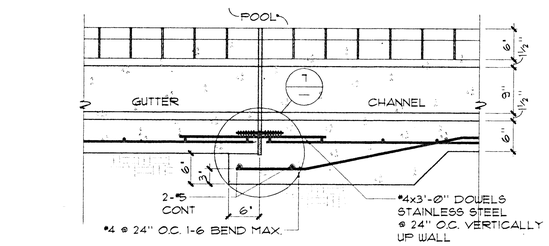

POOL WALL EXPANSION JOINT
1" = 1'-0"

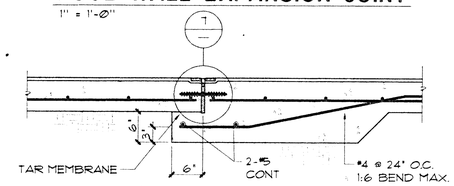

POOL FLOOR EXPANSION JOINT
1" = 1'-0"

6 **EXPANSION JOINT** 1"=1'-0"

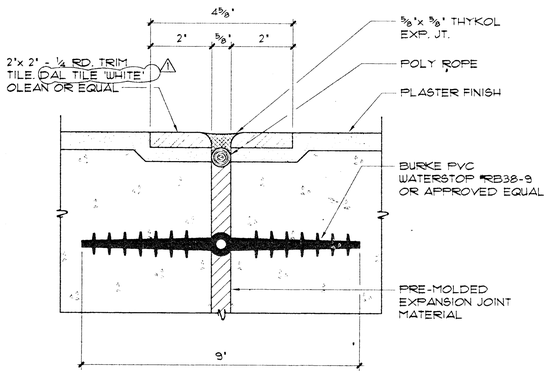

7 **EXPANSION JOINT DETAIL** ½"=1'-0"

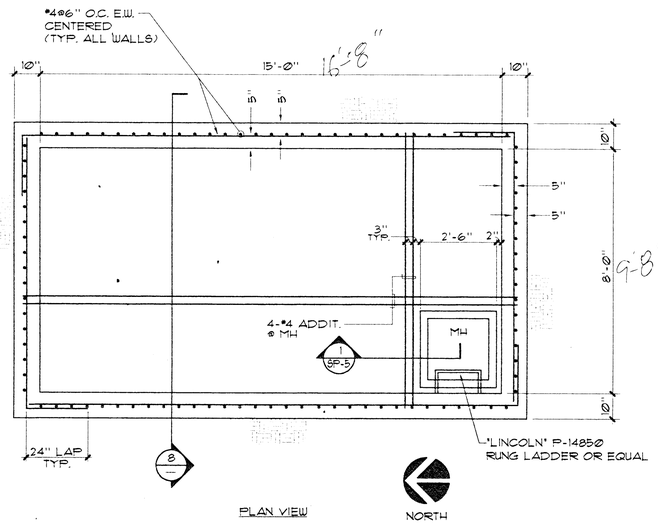

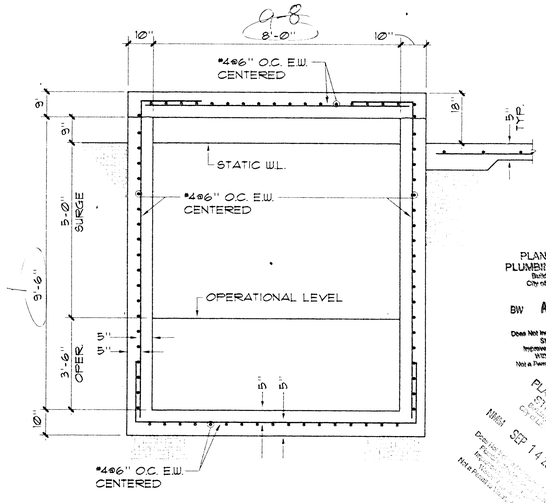

PLANS APPROVED
PLUMBING/MECHANICAL
Building & Safety Dept.
City of Las Vegas, Nevada
BW AUG 0 1 2000
Does Not Include Architectural, Electrical Structural or Off-Site Improvements Make No Change Without Approved Plan is Not a Permit to Violate Any Ordinance

PLANS APPROVED
STRUCTURAL
CITY ENGINEER
MAR SEP 14 2000
DEPARTMENT OF PUBLIC WORKS
Not a Permit to Violate Any Ordinance

8 **SURGE CHAMBER** ⅛"=1'-0"

LUCCHESI •GALATI•

ACUATIC DESIGN GROUP
920 HOLLYWOOD AVE.
CLAREMONT, CALIFORNIA 91711
(909) 626-9400

RECEIVED
MAY - 4 2000
CITY OF LAS VEGAS
CENTRAL PERMITS

DETAILS

SUMMERLIN ARBORS PARK
POOL AND POOL BUILDING

Revisions:
4/03/00 HD. CORR.

Date: OCTOBER 22, 1999
Project No. 98035.00
Scale: AS NOTED
Drawn By: NFC

Sheet Number:
SP-5