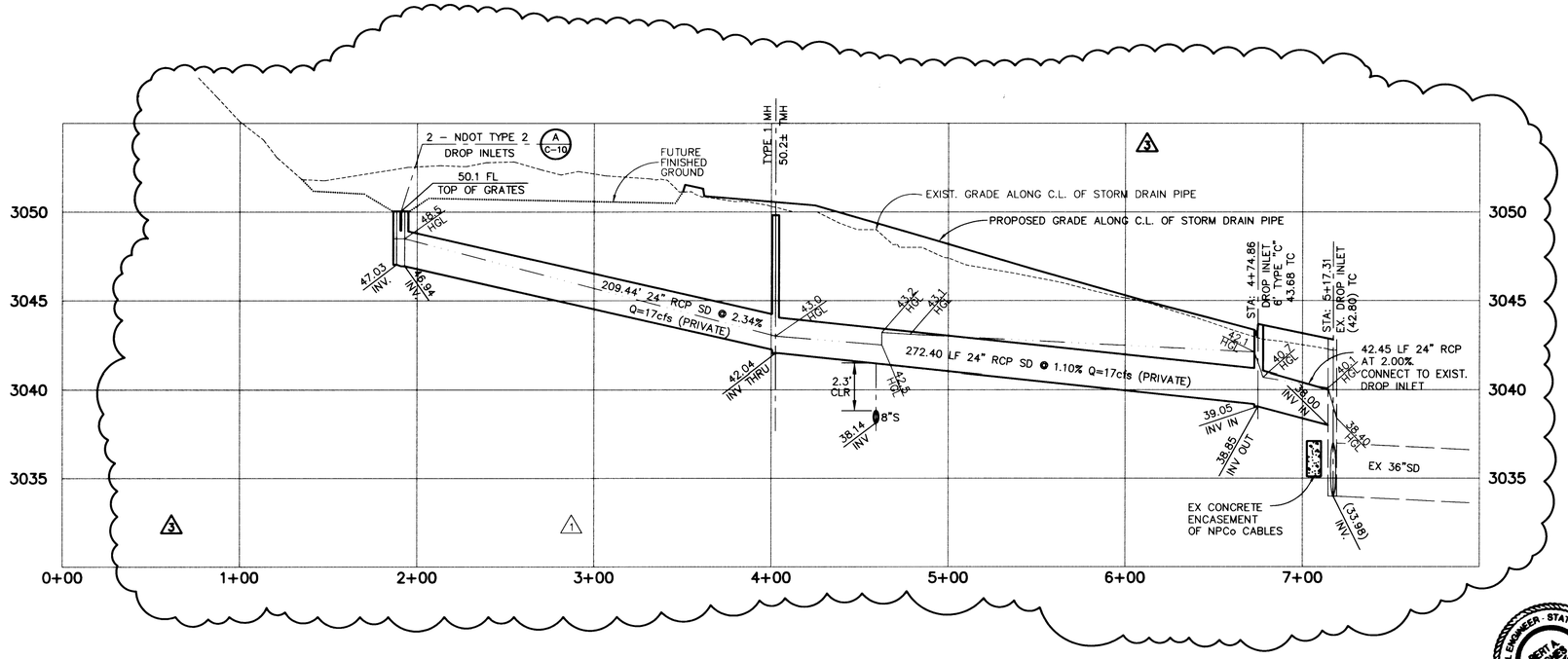

STORM DRAIN PROFILE

SCALE : HORIZ. 1" = 40'
VERT. 1" = 4'

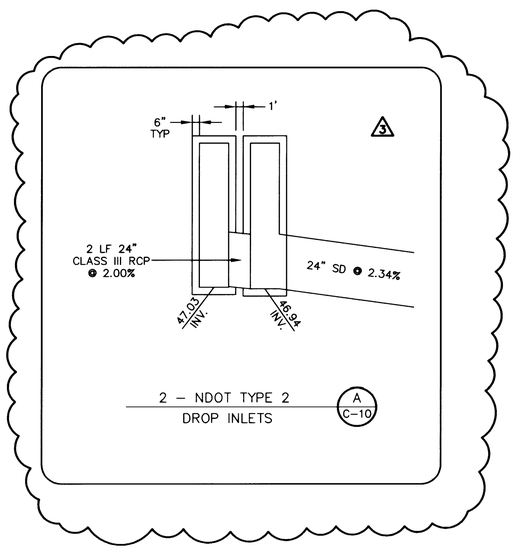

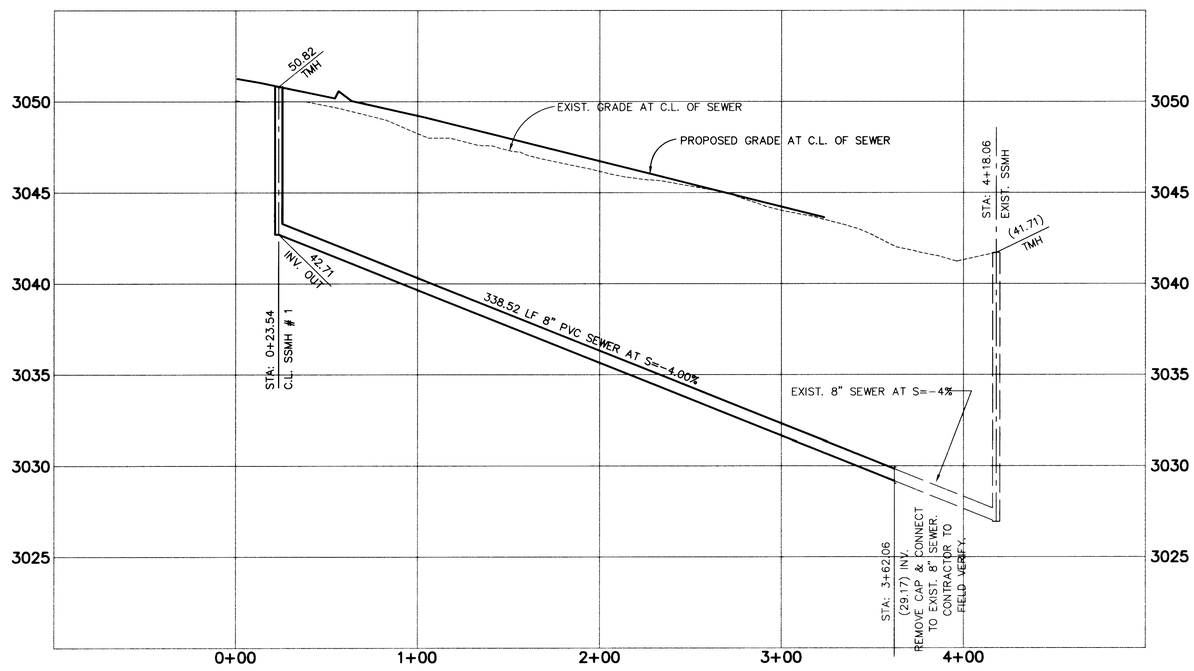

SEWER PROFILE

SCALE : HORIZ. 1" = 40'
VERT. 1" = 4'

REV.	DATE	DESCRIPTION	DATE	AGENCY APP.	DATE	IGCW APP.
1	8-18-99	REVISE SD AND DELETE DETAILS	11/5			
2	12-5-98	REVISE SD TO CLEAR NPCo. ENCASED CABLES				

RECOMMENDED
CHRISTOPHER W. ANDERSON
P.E. NO. 5071

FINAL SUBMITTAL

PROFESSIONAL ENGINEER - STATE OF NEVADA
CHRISTOPHER W. ANDERSON
No. 5071

PROFESSIONAL ENGINEER - STATE OF NEVADA
BERT A. HUGHES
No. 10259

G.C. WALLACE, INC.
Engineering/Architecture
1555 SOUTH RAINBOW BLVD. LAS VEGAS, NEVADA 89102 (702) 363-1200
SUMMERLIN DIVISION: (702) 363-0991

SUMMERLIN
VILLAGE 11/12 UNIT 2A
THE ARBORS SPORTS PARK PHASE I
PARKING LOT, POOL, POOL HOUSE & BALLFIELDS
DETAILS

SHEET
C-10
SHT 10 OF 11

JOB NO. 398.178

F:\398\1786\dwg\maps\Rev3\Sp1-pp2.dwg Thu Nov 04 13:48:30 1999

SP1-SITE

18169

THIS IS A REPLOT

650.49.1

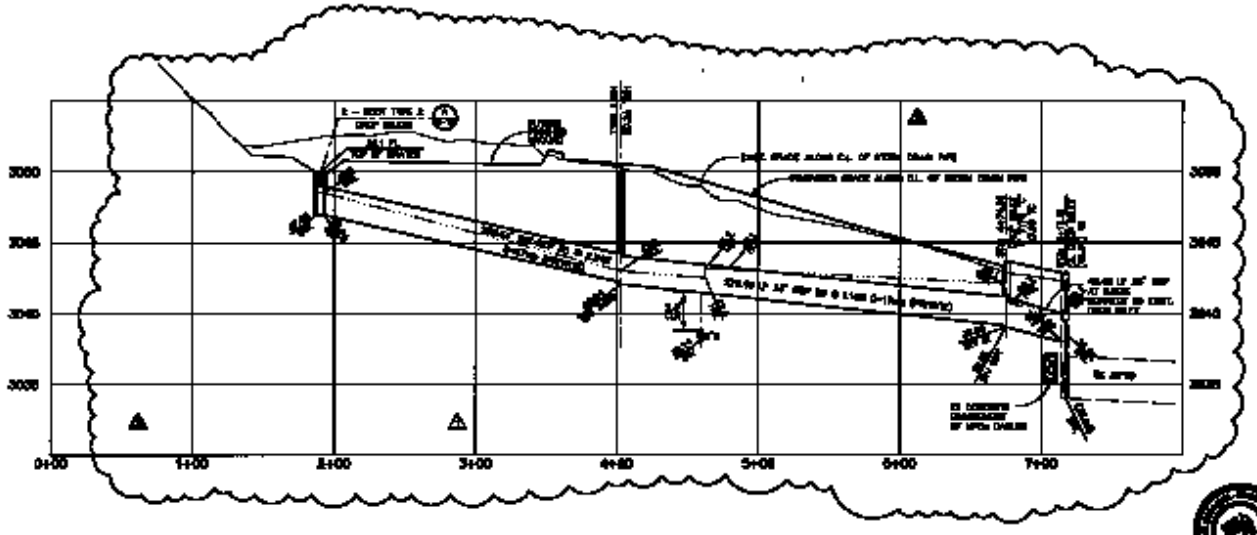

STORM DRAIN PROFILE

SCALE : HORIZ. 1" = 40'
VERT. 1" = 4'

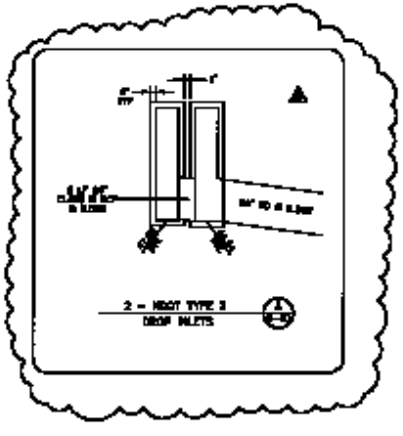

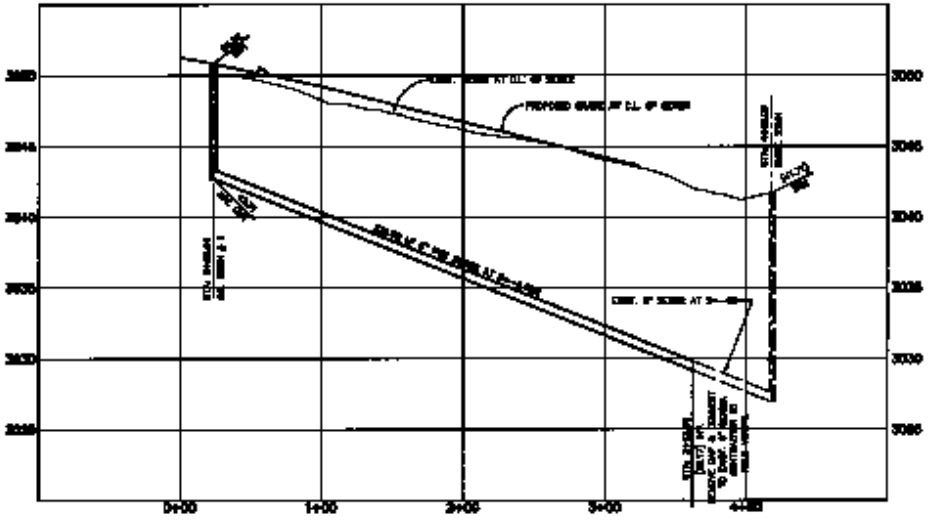

SEWER PROFILE

SCALE : HORIZ. 1" = 40'
VERT. 1" = 4'

G.C. WALLACE, INC.

VILLAGE TYPE UNIT 3A

SHEET
C-10