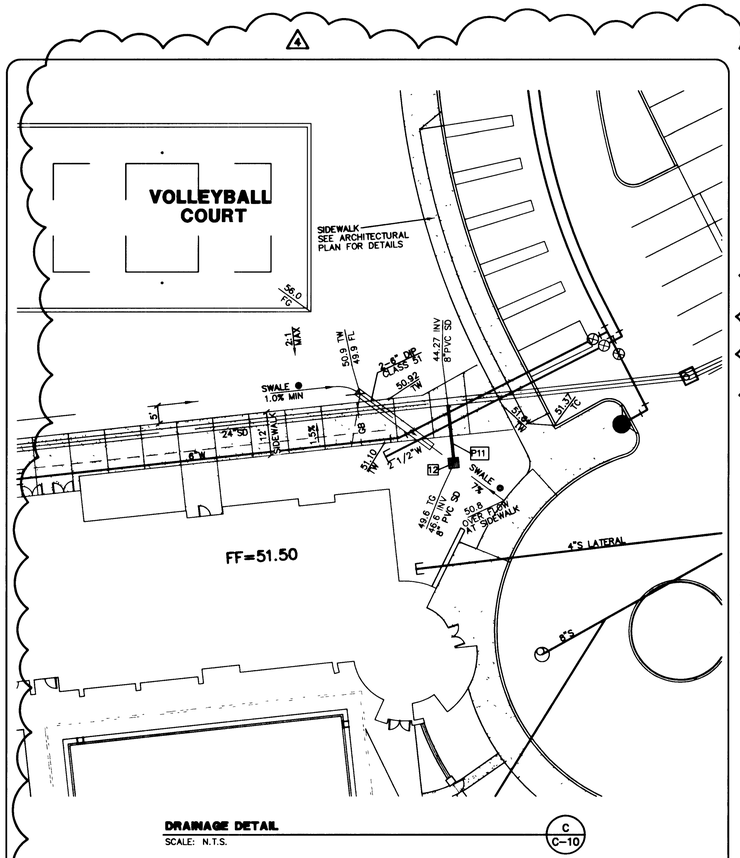

DRAINAGE DETAIL (C / C-10)

SCALE: N.T.S.

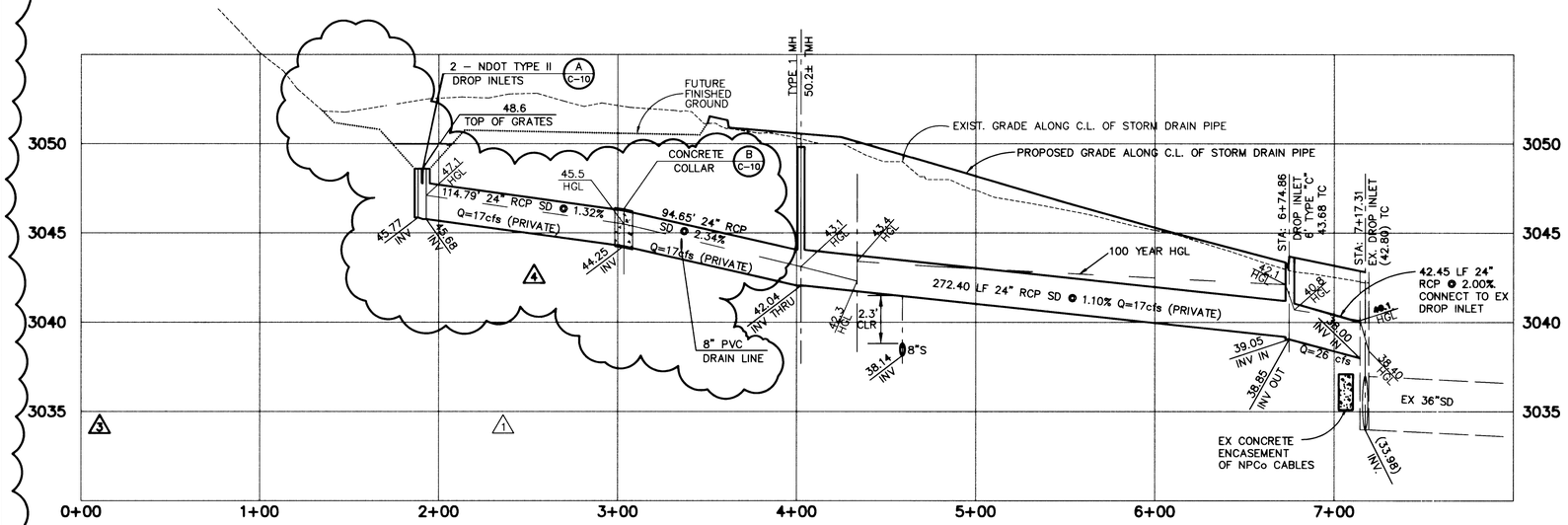

STORM DRAIN PROFILE

SCALE : HORIZ. 1" = 40'
VERT. 1" = 4'

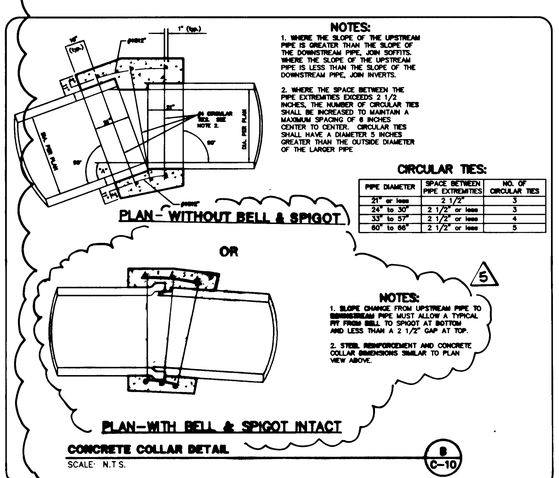

PIPE DIAMETER	SPACE BETWEEN PIPE EXTREMITIES	NO. OF CIRCULAR TIES
21" or less	2 1/2"	3
24" to 30"	2 1/2" or less	3
33" to 57"	2 1/2" or less	4
60" to 66"	2 1/2" or less	5

CONCRETE COLLAR DETAIL (B / C-10)

SCALE: N.T.S.

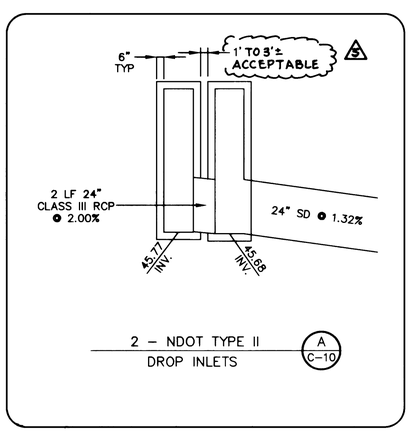

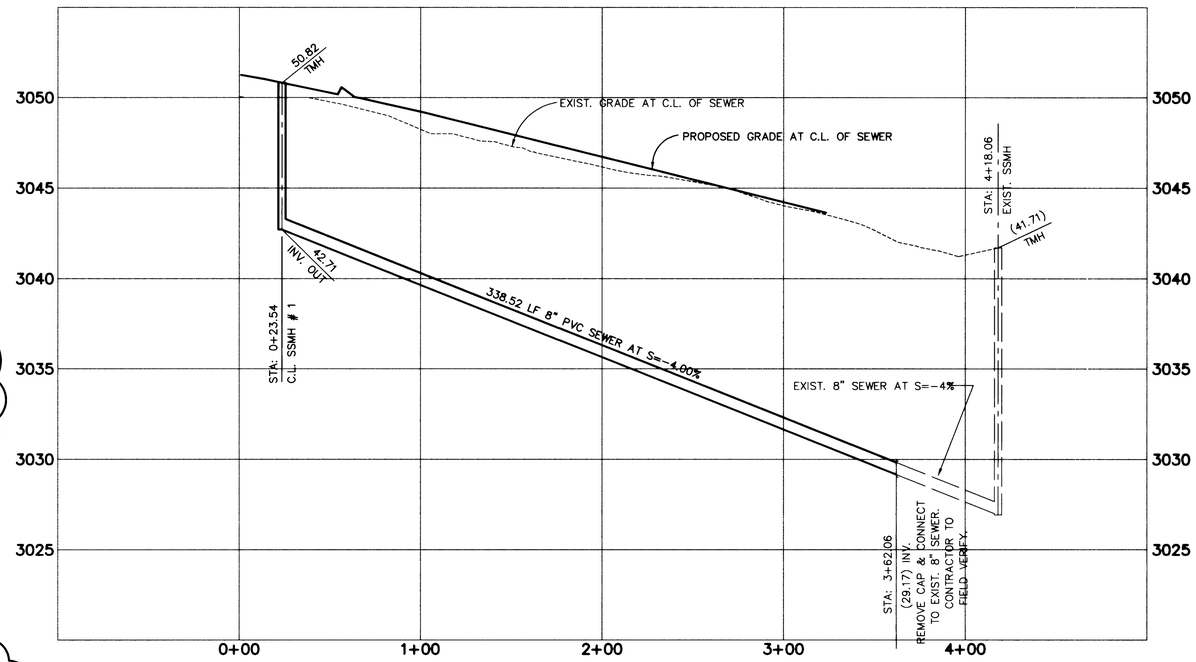

SEWER PROFILE

SCALE : HORIZ. 1" = 40'
VERT. 1" = 4'

REV.	DATE	DESCRIPTION	DATE	AGEN. APP.	DATE	GCW APP.
5	6/29/01	MODIFY COLLAR (INLET DET'S.)	6/29/01	WB	6/29/01	JSH
4	04/20/00	REVISE SD PROFILE AND ADD DETAILS B AND C	6/19/00	CJ	6/19/00	JSH
3	8-18-99	REVISE SD AND DELETE DETAILS	9/13/99	CJ	9/13/99	JSH
2	12-5-98	REVISE SD TO COLLAR NPCo.	12/7/98	CJ	12/7/98	JSH
1		ENCASED CABLES	7/17/98	CJ	7/17/98	JSH

RECOMMENDED
BERT A. HUGHES
P.E. NO. 10259

STATE OF NEVADA PROFESSIONAL ENGINEER BERT A. HUGHES No. 10259

G.C. WALLACE, INC.
Engineering Architecture
1555 SOUTH RAINBOW BLVD. LAS VEGAS, NEVADA 89102 (702) 363-1200
SUMMERLIN DIVISION: (702) 363-0991

SUMMERLIN
VILLAGE 11/12 UNIT 2A
THE ARBORS SPORTS PARK PHASE I
PARKING LOT, POOL, POOL HOUSE & BALLFIELDS
DETAILS

SHEET **C-10**
SHT 10 OF 12

JOB NO. 398.178

24854 (P) 33301

650.49-1
THIS IS A REPLOT