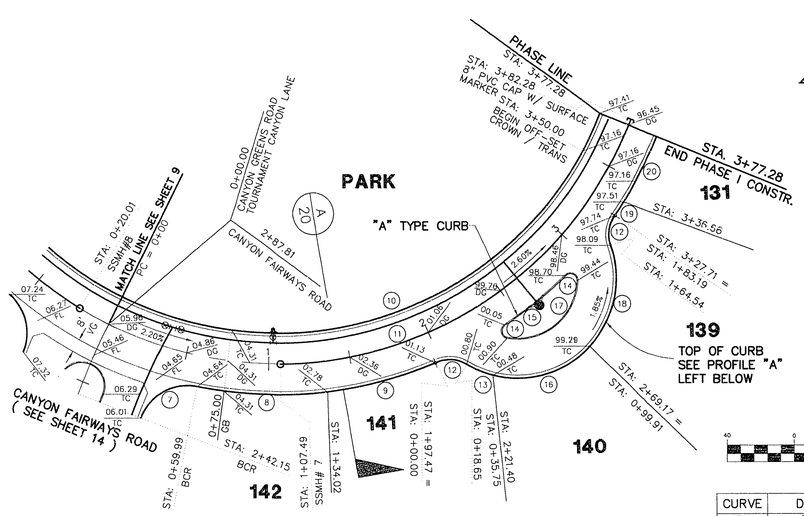

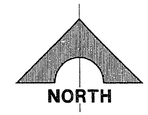

GRAPHIC SCALE

40 0 20 40 80 160

(IN FEET)
1 inch = 40 ft.

CURVE	DELTA	RADIUS	LENGTH	TANGENT
1	90°51'47"	20.00'	31.72'	20.30'
2	81°40'24"	20.00'	28.51'	17.29'
3	78°49'32"	20.00'	27.52'	16.44'
4	77°58'59"	44.50'	60.57'	36.02'
5	93°32'07"	44.50'	72.65'	47.33'
6	87°18'25"	44.50'	67.81'	42.46'
7	80°22'06"	30.00'	42.08'	25.34'
8	18°26'31"	248.50'	79.99'	40.34'
9	15°48'18"	248.50'	68.55'	34.49'
10	93°59'09"	211.50'	346.94'	226.75'
11	93°59'09"	230.00'	377.28'	246.58'
12	53°26'09"	20.00'	18.65'	10.07'
13	16°19'55"	60.00'	17.10'	8.61'
14	137°19'16"	4.00'	9.59'	10.24'
15	10°49'26"	248.50'	46.94'	23.54'
16	61°15'46"	60.00'	64.15'	35.53'
17	98°10'54"	36.00'	60.43'	40.11'
18	61°43'20"	60.00'	64.64'	35.85'
19	02°13'46"	248.50'	9.67'	4.84'
20	10°07'11"	248.50'	43.89'	22.00'

TOURNAMENT CANYON LANE

SCALE: HORIZ. 1" = 40'
VERT. 1" = 4'

PRIVATE DRIVE, C.L.V. SEWER EASEMENT, AND PUBLIC UTILITY EASEMENT

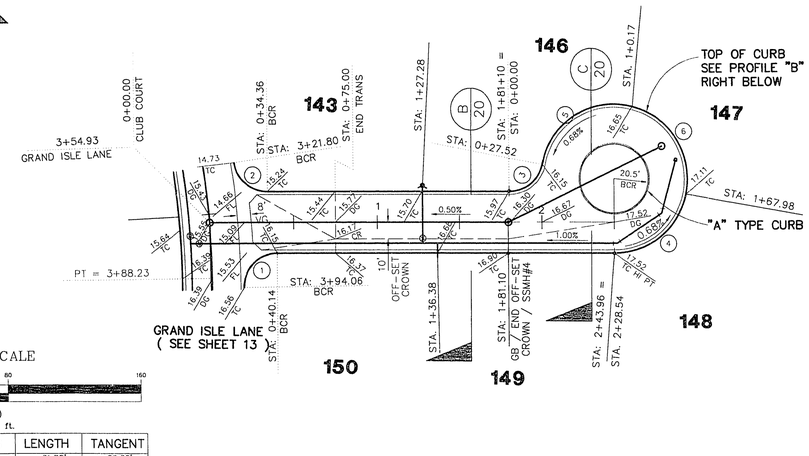

CLUB COURT

SCALE: HORIZ. 1" = 40'
VERT. 1" = 4'

PRIVATE DRIVE, C.L.V. SEWER EASEMENT, AND PUBLIC UTILITY EASEMENT

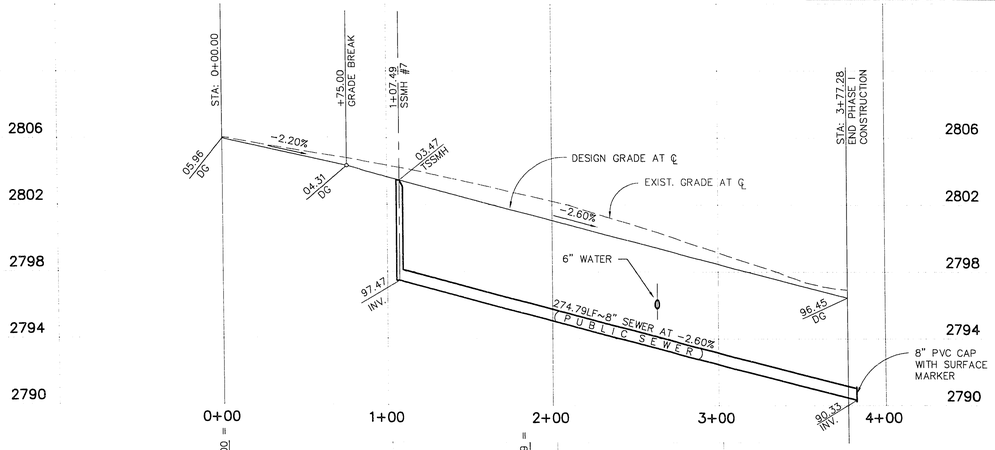

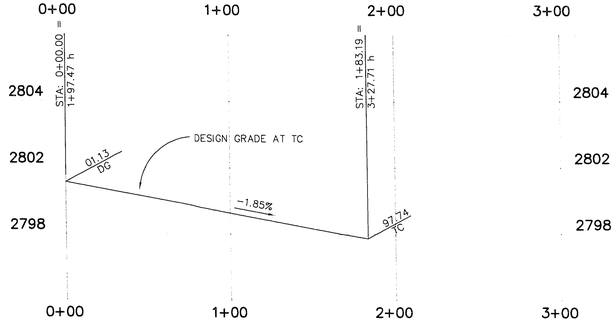

PROFILE "A"

SCALE: HORIZ. 1" = 40'
VERT. 1" = 4'

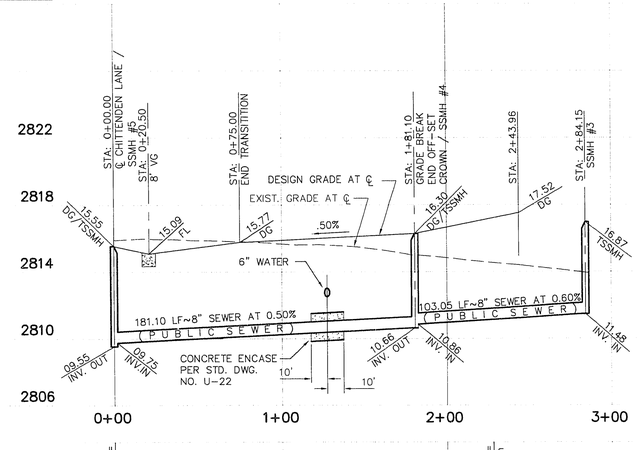

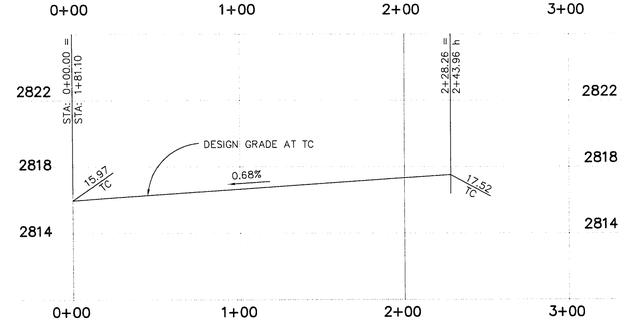

PROFILE "B"

SCALE: HORIZ. 1" = 40'
VERT. 1" = 4'

JOB NO. 62003.713

RAES V3-FDCC 03/29/96

G.C. WALLACE, INC.
Engineering/Architecture 1555 SOUTH RAINBOW BLVD./LAS VEGAS, NEVADA 89102

SUMMERLIN
VILLAGE 3 CUSTOM LOTS - PHASE 1
TOURNAMENT CANYON LANE / CLUB COURT
PLAN & PROFILE
STA 0+00.00 TO 3+77.28 & STA. 0+00.00 TO 2+43.96

SHEET
16
SHT 16 OF 23

RECOMMENDED FOR APPROVAL
CHRISTOPHER R. DERICKSON
PROFESSIONAL ENGINEER
STATE OF NEVADA

REV.	DATE	DESCRIPTION	DATE	APPROVAL

11-29-130

107Y-4454-1