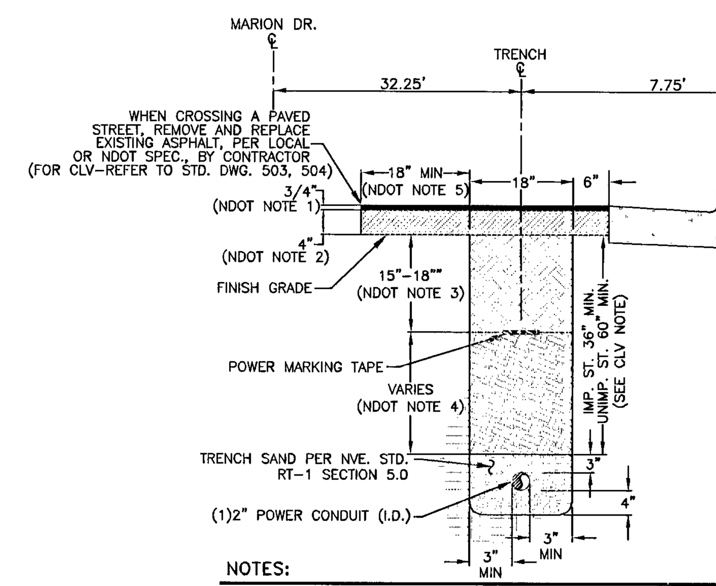

NOTES:

NDOT REQUIREMENTS (APPLICABLE WITHIN NDOT RIGHT-OF-WAY ONLY):
1. 3/4 INCH OPEN-GRADE.
2. 4 INCH MINIMUM DENSE-GRADE OR MATCH EXISTING, WHICHEVER IS GREATER.
3. BASE AGGREGATE (AS PER NDOT SPECIFICATIONS; SECTION 704). A MINIMUM OF 16 INCHES TO BE LAID IN MAXIMUM 8 INCH LOOSE LIFTS. 95% COMPACTION REQUIRED.
4. BACKFILL WITH SELECT MATERIAL TO BOTTOM OF BASE AGGREGATE (AS PER NDOT SPECIFICATIONS; SECTION 207). 90% COMPACTION REQUIRED.
5. LIMITS OF PAVING TO BE DETERMINED BY THE INSPECTOR.

CLV REQUIREMENTS (APPLICABLE WITHIN CITY OF LAS VEGAS LIMITS ONLY):
IMPROVED AREA (IMP. ST.): (LOCATION OF TRENCH)
AREA WILL BE CONSIDERED IMPROVED IF IT MEETS ONE OR MORE OF THE FOLLOWING CRITERIA(S).
- EXISTING PERMANENT PAVEMENT WITH CURB & GUTTER AND/OR ADJACENT PERMANENT SIDEWALK.
- WITHIN AN IMPROVED TRAIL AREA.
- LIMITS OF CONSTRUCTION INSTALLED CONCURRENT WITH A PRIVATE OR PUBLIC PROJECT.

UNIMPROVED AREA (UNIMP. ST.): (LOCATION OF TRENCH)
ANY OTHER SCENARIO THAT FAILS TO MEET THE IMPROVED AREA CRITERIA(S) WILL BE CONSIDERED AN UNIMPROVED AREA.

NVE REQUIREMENTS:
FOR ALL OTHER JURISDICTIONS REFER TO NVE STANDARDS.
BACKFILL REQUIREMENTS NVE. STD. RT-1.
TRENCH DEPTH REQUIREMENTS NVE. STD. RT-5.

TRENCH DETAIL
1-2" CONDUITS
DETAIL "BD"

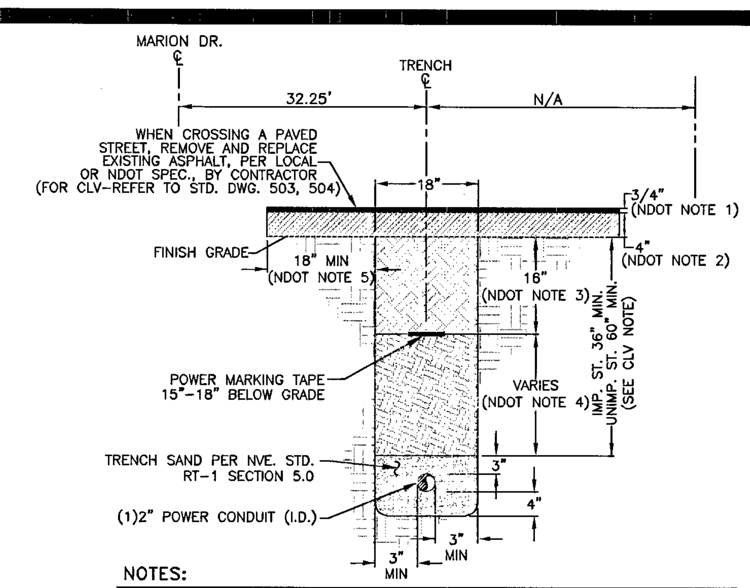

NOTES:

NDOT REQUIREMENTS (APPLICABLE WITHIN NDOT RIGHT-OF-WAY ONLY):
1. 3/4 INCH OPEN-GRADE.
2. 4 INCH MINIMUM DENSE-GRADE OR MATCH EXISTING, WHICHEVER IS GREATER.
3. BASE AGGREGATE (AS PER NDOT SPECIFICATIONS; SECTION 704). A MINIMUM OF 16 INCHES TO BE LAID IN MAXIMUM 8 INCH LOOSE LIFTS. 95% COMPACTION REQUIRED.
4. BACKFILL WITH SELECT MATERIAL TO BOTTOM OF BASE AGGREGATE (AS PER NDOT SPECIFICATIONS; SECTION 207). 90% COMPACTION REQUIRED.
5. LIMITS OF PAVING TO BE DETERMINED BY THE INSPECTOR.

CLV REQUIREMENTS (APPLICABLE WITHIN CITY OF LAS VEGAS LIMITS ONLY):
IMPROVED AREA (IMP. ST.): (LOCATION OF TRENCH)
AREA WILL BE CONSIDERED IMPROVED IF IT MEETS ONE OR MORE OF THE FOLLOWING CRITERIA(S).
- EXISTING PERMANENT PAVEMENT WITH CURB & GUTTER AND/OR ADJACENT PERMANENT SIDEWALK.
- WITHIN AN IMPROVED TRAIL AREA.
- LIMITS OF CONSTRUCTION INSTALLED CONCURRENT WITH A PRIVATE OR PUBLIC PROJECT.

UNIMPROVED AREA (UNIMP. ST.): (LOCATION OF TRENCH)
ANY OTHER SCENARIO THAT FAILS TO MEET THE IMPROVED AREA CRITERIA(S) WILL BE CONSIDERED AN UNIMPROVED AREA.

NPC REQUIREMENTS:
FOR ALL OTHER JURISDICTIONS REFER TO NPC STANDARDS.
BACKFILL REQUIREMENTS NPC. STD. RT-1.
TRENCH DEPTH REQUIREMENTS NPC. STD. RT-5.

TRENCH DETAIL
1-2" CONDUITS
DETAIL "BF"

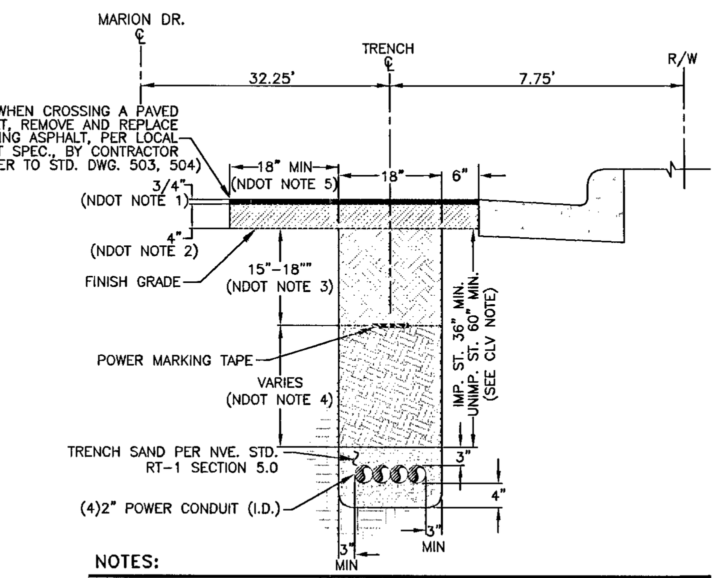

NOTES:

NDOT REQUIREMENTS (APPLICABLE WITHIN NDOT RIGHT-OF-WAY ONLY):
1. 3/4 INCH OPEN-GRADE.
2. 4 INCH MINIMUM DENSE-GRADE OR MATCH EXISTING, WHICHEVER IS GREATER.
3. BASE AGGREGATE (AS PER NDOT SPECIFICATIONS; SECTION 704). A MINIMUM OF 16 INCHES TO BE LAID IN MAXIMUM 8 INCH LOOSE LIFTS. 95% COMPACTION REQUIRED.
4. BACKFILL WITH SELECT MATERIAL TO BOTTOM OF BASE AGGREGATE (AS PER NDOT SPECIFICATIONS; SECTION 207). 90% COMPACTION REQUIRED.
5. LIMITS OF PAVING TO BE DETERMINED BY THE INSPECTOR.

CLV REQUIREMENTS (APPLICABLE WITHIN CITY OF LAS VEGAS LIMITS ONLY):
IMPROVED AREA (IMP. ST.): (LOCATION OF TRENCH)
AREA WILL BE CONSIDERED IMPROVED IF IT MEETS ONE OR MORE OF THE FOLLOWING CRITERIA(S).
- EXISTING PERMANENT PAVEMENT WITH CURB & GUTTER AND/OR ADJACENT PERMANENT SIDEWALK.
- WITHIN AN IMPROVED TRAIL AREA.
- LIMITS OF CONSTRUCTION INSTALLED CONCURRENT WITH A PRIVATE OR PUBLIC PROJECT.

UNIMPROVED AREA (UNIMP. ST.): (LOCATION OF TRENCH)
ANY OTHER SCENARIO THAT FAILS TO MEET THE IMPROVED AREA CRITERIA(S) WILL BE CONSIDERED AN UNIMPROVED AREA.

NVE REQUIREMENTS:
FOR ALL OTHER JURISDICTIONS REFER TO NVE STANDARDS.
BACKFILL REQUIREMENTS NVE. STD. RT-1.
TRENCH DEPTH REQUIREMENTS NVE. STD. RT-5.

TRENCH DETAIL
4-2" CONDUITS
DETAIL "BH"

T,R,S: 2062 32
APN: 140

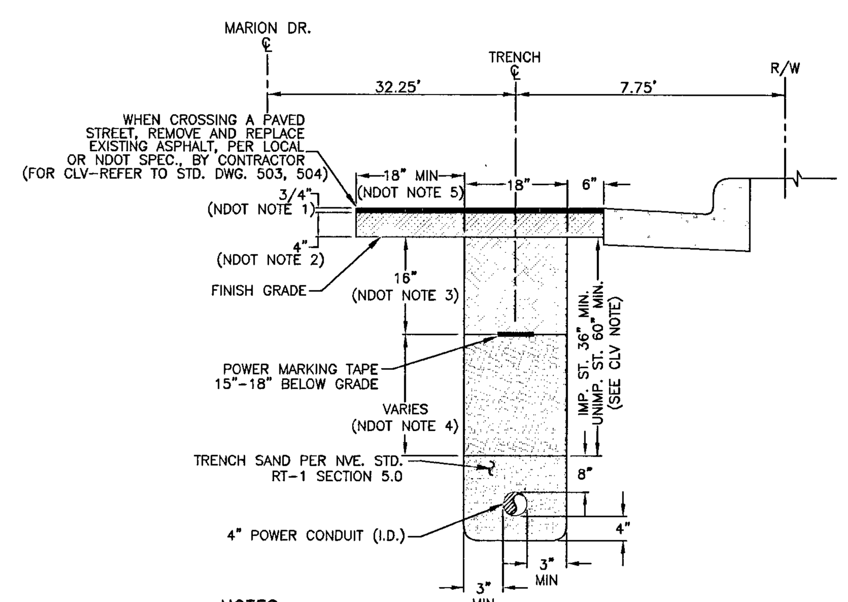

NOTES:

NDOT REQUIREMENTS (APPLICABLE WITHIN NDOT RIGHT-OF-WAY ONLY):
1. 3/4 INCH OPEN-GRADE.
2. 4 INCH MINIMUM DENSE-GRADE OR MATCH EXISTING, WHICHEVER IS GREATER.
3. BASE AGGREGATE (AS PER NDOT SPECIFICATIONS; SECTION 704). A MINIMUM OF 16 INCHES TO BE LAID IN MAXIMUM 8 INCH LOOSE LIFTS. 95% COMPACTION REQUIRED.
4. BACKFILL WITH SELECT MATERIAL TO BOTTOM OF BASE AGGREGATE (AS PER NDOT SPECIFICATIONS; SECTION 207). 90% COMPACTION REQUIRED.
5. LIMITS OF PAVING TO BE DETERMINED BY THE INSPECTOR.

CLV REQUIREMENTS (APPLICABLE WITHIN CITY OF LAS VEGAS LIMITS ONLY):
IMPROVED AREA (IMP. ST.): (LOCATION OF TRENCH)
AREA WILL BE CONSIDERED IMPROVED IF IT MEETS ONE OR MORE OF THE FOLLOWING CRITERIA(S).
- EXISTING PERMANENT PAVEMENT WITH CURB & GUTTER AND/OR ADJACENT PERMANENT SIDEWALK.
- WITHIN AN IMPROVED TRAIL AREA.
- LIMITS OF CONSTRUCTION INSTALLED CONCURRENT WITH A PRIVATE OR PUBLIC PROJECT.

UNIMPROVED AREA (UNIMP. ST.): (LOCATION OF TRENCH)
ANY OTHER SCENARIO THAT FAILS TO MEET THE IMPROVED AREA CRITERIA(S) WILL BE CONSIDERED AN UNIMPROVED AREA.

NVE REQUIREMENTS:
FOR ALL OTHER JURISDICTIONS REFER TO NVE STANDARDS.
BACKFILL REQUIREMENTS NVE. STD. RT-1.
TRENCH DEPTH REQUIREMENTS NVE. STD. RT-5.

TRENCH DETAIL
1-4" CONDUITS
DETAIL "BI"

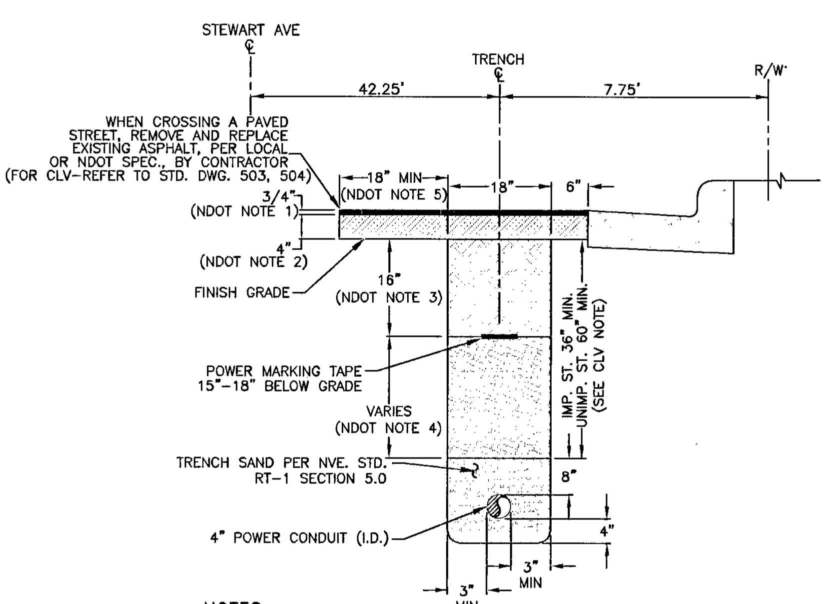

NOTES:

NDOT REQUIREMENTS (APPLICABLE WITHIN NDOT RIGHT-OF-WAY ONLY):
1. 3/4 INCH OPEN-GRADE.
2. 4 INCH MINIMUM DENSE-GRADE OR MATCH EXISTING, WHICHEVER IS GREATER.
3. BASE AGGREGATE (AS PER NDOT SPECIFICATIONS; SECTION 704). A MINIMUM OF 16 INCHES TO BE LAID IN MAXIMUM 8 INCH LOOSE LIFTS. 95% COMPACTION REQUIRED.
4. BACKFILL WITH SELECT MATERIAL TO BOTTOM OF BASE AGGREGATE (AS PER NDOT SPECIFICATIONS; SECTION 207). 90% COMPACTION REQUIRED.
5. LIMITS OF PAVING TO BE DETERMINED BY THE INSPECTOR.

CLV REQUIREMENTS (APPLICABLE WITHIN CITY OF LAS VEGAS LIMITS ONLY):
IMPROVED AREA (IMP. ST.): (LOCATION OF TRENCH)
AREA WILL BE CONSIDERED IMPROVED IF IT MEETS ONE OR MORE OF THE FOLLOWING CRITERIA(S).
- EXISTING PERMANENT PAVEMENT WITH CURB & GUTTER AND/OR ADJACENT PERMANENT SIDEWALK.
- WITHIN AN IMPROVED TRAIL AREA.
- LIMITS OF CONSTRUCTION INSTALLED CONCURRENT WITH A PRIVATE OR PUBLIC PROJECT.

UNIMPROVED AREA (UNIMP. ST.): (LOCATION OF TRENCH)
ANY OTHER SCENARIO THAT FAILS TO MEET THE IMPROVED AREA CRITERIA(S) WILL BE CONSIDERED AN UNIMPROVED AREA.

NVE REQUIREMENTS:
FOR ALL OTHER JURISDICTIONS REFER TO NVE STANDARDS.
BACKFILL REQUIREMENTS NVE. STD. RT-1.
TRENCH DEPTH REQUIREMENTS NVE. STD. RT-5.

TRENCH DETAIL
1-4" CONDUITS
DETAIL "BJ"

!!!! CAUTION !!!!
ENERGIZED CABLES...
CALL BEFORE YOU DIG

MATCH LINE 'R' - SEE SHEET 12

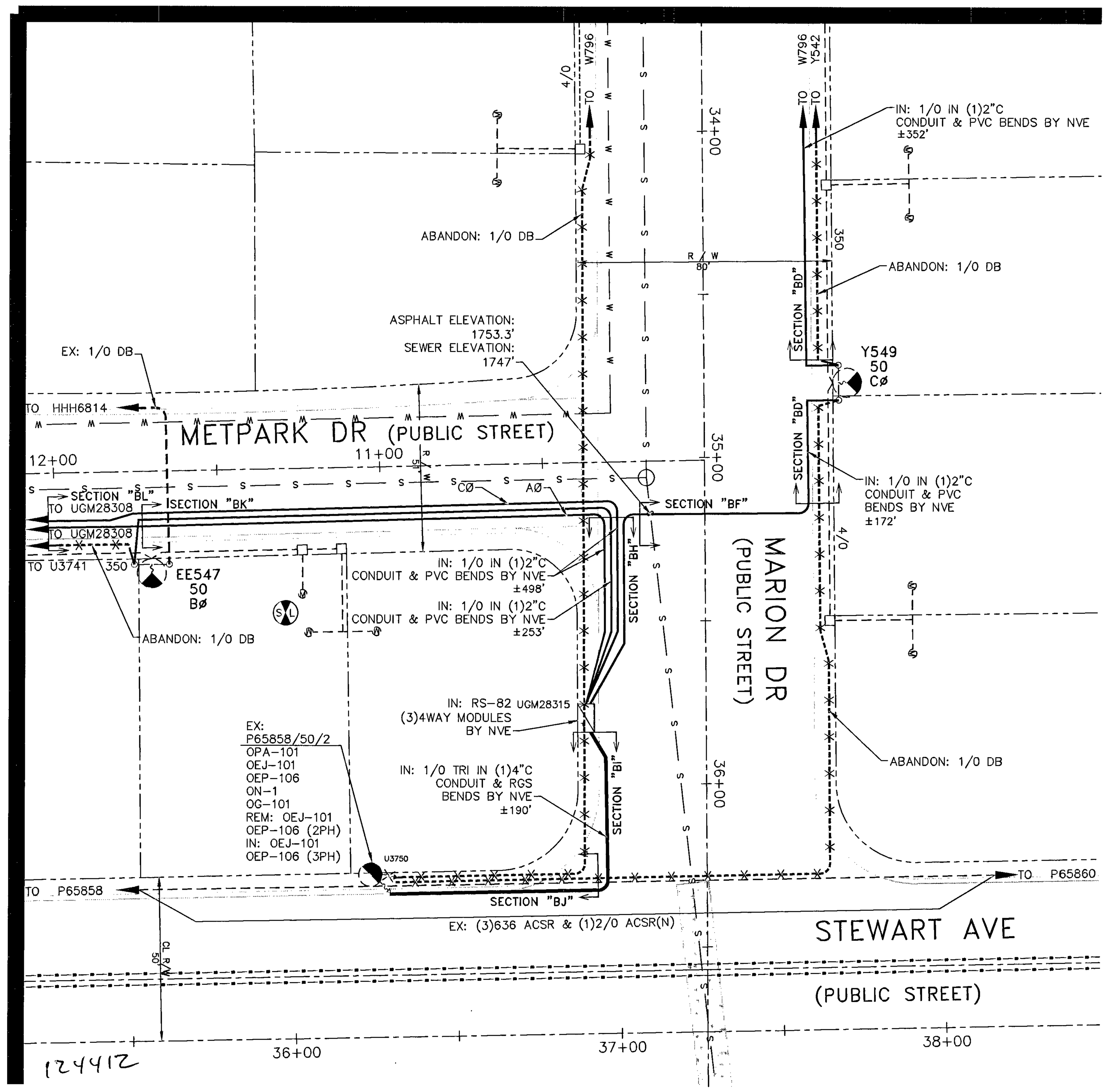

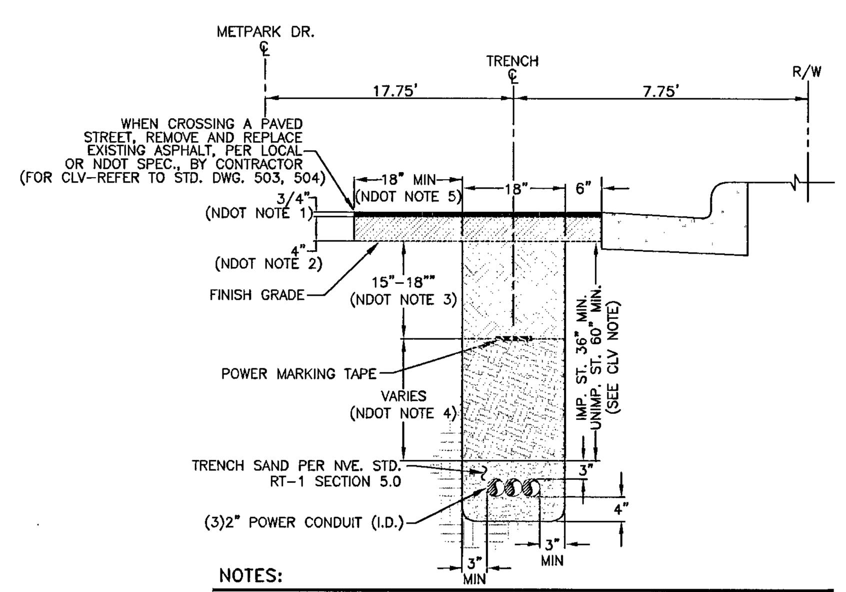

NOTES:

NDOT REQUIREMENTS (APPLICABLE WITHIN NDOT RIGHT-OF-WAY ONLY):
1. 3/4 INCH OPEN-GRADE.
2. 4 INCH MINIMUM DENSE-GRADE OR MATCH EXISTING, WHICHEVER IS GREATER.
3. BASE AGGREGATE (AS PER NDOT SPECIFICATIONS; SECTION 704). A MINIMUM OF 16 INCHES TO BE LAID IN MAXIMUM 8 INCH LOOSE LIFTS. 95% COMPACTION REQUIRED.
4. BACKFILL WITH SELECT MATERIAL TO BOTTOM OF BASE AGGREGATE (AS PER NDOT SPECIFICATIONS; SECTION 207). 90% COMPACTION REQUIRED.
5. LIMITS OF PAVING TO BE DETERMINED BY THE INSPECTOR.

CLV REQUIREMENTS (APPLICABLE WITHIN CITY OF LAS VEGAS LIMITS ONLY):
IMPROVED AREA (IMP. ST.): (LOCATION OF TRENCH)
AREA WILL BE CONSIDERED IMPROVED IF IT MEETS ONE OR MORE OF THE FOLLOWING CRITERIA(S).
- EXISTING PERMANENT PAVEMENT WITH CURB & GUTTER AND/OR ADJACENT PERMANENT SIDEWALK.
- WITHIN AN IMPROVED TRAIL AREA.
- LIMITS OF CONSTRUCTION INSTALLED CONCURRENT WITH A PRIVATE OR PUBLIC PROJECT.

UNIMPROVED AREA (UNIMP. ST.): (LOCATION OF TRENCH)
ANY OTHER SCENARIO THAT FAILS TO MEET THE IMPROVED AREA CRITERIA(S) WILL BE CONSIDERED AN UNIMPROVED AREA.

NVE REQUIREMENTS:
FOR ALL OTHER JURISDICTIONS REFER TO NVE STANDARDS.
BACKFILL REQUIREMENTS NVE. STD. RT-1.
TRENCH DEPTH REQUIREMENTS NVE. STD. RT-5.

TRENCH DETAIL
3-2" CONDUITS
DETAIL "BK"

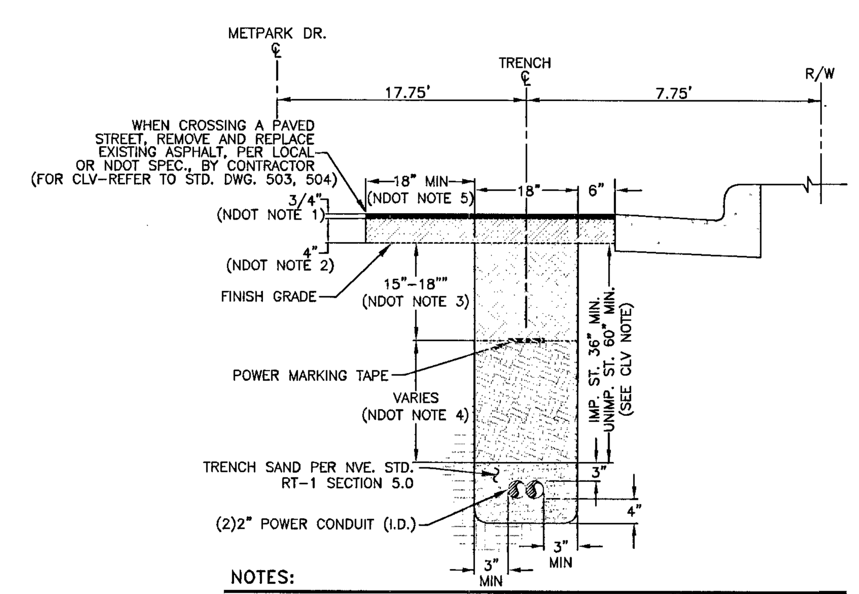

NOTES:

NDOT REQUIREMENTS (APPLICABLE WITHIN NDOT RIGHT-OF-WAY ONLY):
1. 3/4 INCH OPEN-GRADE.
2. 4 INCH MINIMUM DENSE-GRADE OR MATCH EXISTING, WHICHEVER IS GREATER.
3. BASE AGGREGATE (AS PER NDOT SPECIFICATIONS; SECTION 704). A MINIMUM OF 16 INCHES TO BE LAID IN MAXIMUM 8 INCH LOOSE LIFTS. 95% COMPACTION REQUIRED.
4. BACKFILL WITH SELECT MATERIAL TO BOTTOM OF BASE AGGREGATE (AS PER NDOT SPECIFICATIONS; SECTION 207). 90% COMPACTION REQUIRED.
5. LIMITS OF PAVING TO BE DETERMINED BY THE INSPECTOR.

CLV REQUIREMENTS (APPLICABLE WITHIN CITY OF LAS VEGAS LIMITS ONLY):
IMPROVED AREA (IMP. ST.): (LOCATION OF TRENCH)
AREA WILL BE CONSIDERED IMPROVED IF IT MEETS ONE OR MORE OF THE FOLLOWING CRITERIA(S).
- EXISTING PERMANENT PAVEMENT WITH CURB & GUTTER AND/OR ADJACENT PERMANENT SIDEWALK.
- WITHIN AN IMPROVED TRAIL AREA.
- LIMITS OF CONSTRUCTION INSTALLED CONCURRENT WITH A PRIVATE OR PUBLIC PROJECT.

UNIMPROVED AREA (UNIMP. ST.): (LOCATION OF TRENCH)
ANY OTHER SCENARIO THAT FAILS TO MEET THE IMPROVED AREA CRITERIA(S) WILL BE CONSIDERED AN UNIMPROVED AREA.

NVE REQUIREMENTS:
FOR ALL OTHER JURISDICTIONS REFER TO NVE STANDARDS.
BACKFILL REQUIREMENTS NVE. STD. RT-1.
TRENCH DEPTH REQUIREMENTS NVE. STD. RT-5.

TRENCH DETAIL
2-2" CONDUITS
DETAIL "BL"

MAINTENANCE PROJECTS REQUIRE THE USE OF SCHEDULE 40 FOR ALL 2", 3", & 4" CONDUIT. D.B. 60 IS REQUIRED FOR ALL 6"CONDUIT. IF COILABLE CONDUIT IS USED, IT MUST BE H.D.P.E. WITHOUT RE-GROUND MATERIALS.

PURPOSE OF PROJECT:
REPLACE EXISTING BAD/FAULTED DIRECT BURY 1/0 CABLE WITH CONDUITED 1/0 CABLE

NOTE: ALL ABOVE GROUND UTILITY APPURTENANCES SHALL CONFORM TO THE REQUIREMENTS OF TITLE 19.12.040

NOTE: ALL TRENCHING AND AC PATCHING WORKS SHALL CONFORM TO USD CCA STD. DWG 500 SERIES. REPLACEMENT OF SIDEWALK, CURB, GUTTER, CROSS GUTTER, AND OTHER WORKS SHALL CONFORM TO THE USD CCA STANDARD DRAWINGS.

H# 38603 Duo# 1071 5264-PWR

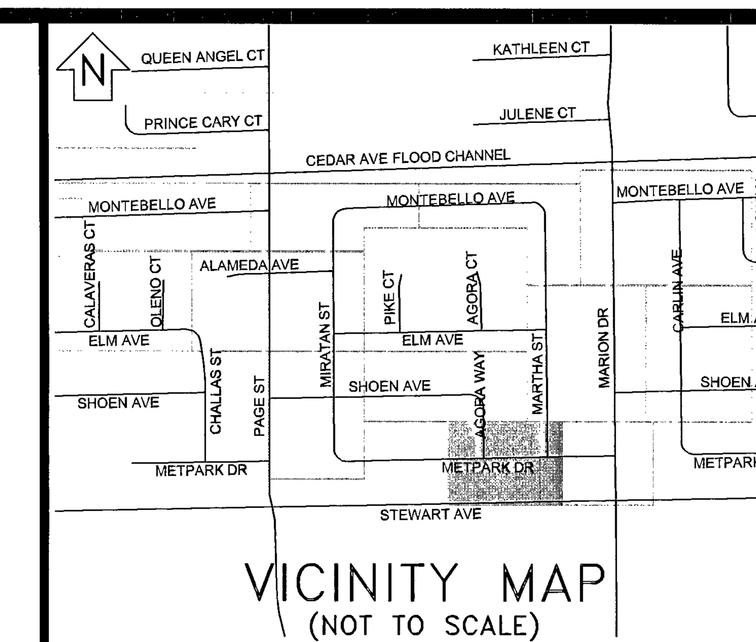

VICINITY MAP
(NOT TO SCALE)

EVERY EFFORT HAS BEEN MADE TO IDENTIFY ALL NVE FACILITIES. THE CUSTOMER SHALL CONFIRM THE EXISTENCE AND LOCATION OF THESE FACILITIES.

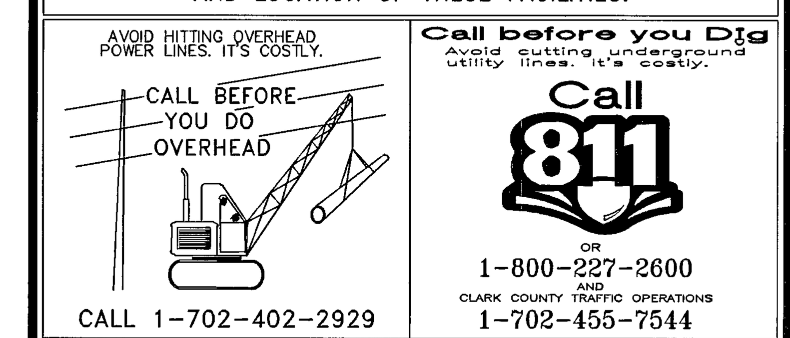

REVISIONS

NO.	DESCRIPTION	DATE	G.A.
△			
△			
△			
△			
△			
△			
△			
△			
△			
△			

TYPE OF EASEMENT:
- AERIAL ☐
- STANDARD ☐
- R/W-31 ☐
- UNDERGROUND ■
- AS BUILT UNDERGROUND ☐
- R.O.E./R/W-5-COM ☐
- 3rd PARTY ☐
- UNDERGROUND BY EXHIBIT ☐
- (N-DOT) PERMIT ☐
- (BLM) PERMIT ☐
- RAILROAD-UPRR-PERMIT ☐
- SO. NEVADA WATER PERMIT ☐
- NOT REQUIRED ☐
- Misc. Info. ☐

JPA NOTES:
EMBARQ CONTACT:
PHONE NUMBER:
DATE OF CONTACT:
TO SET NEW POLES
TO STAKE NEW POLES
TO PROVIDE ____ POLES
FT. CLASS
FT. CLASS
FT. CLASS
TO DIG POLE HOLES
TO REMOVE EX. POLES
JPA#: N/A

EXHIBIT 'A'

NVE INFORMATION:
COORDINATOR: ROBERT BATES
PHONE: 402-6745
DESIGNER: THOMAS FOWLER
DCA: N/A
INSPECTION SCHEDULING: 402-3008
STAND BY: 402-4117,402-4116,402-4118
DISTRICT: LAS VEGAS NORTH

CUSTOMER INFORMATION:
APPLICANT NVE
ENGINEER: NVE
CONTACT: NVE
APPROVAL DATE:

GOVERNMENT INFORMATION:
AGENCY: CITY OF LAS VEGAS
APPROVAL DATE:

FOR EACH SERVICE POINT (POINT OF DELIVERY), ENERGY FOR EACH TENANT SPACE WILL BE MEASURED THROUGH ONE WATTHOUR METER. ENERGY FOR ALL NON-TENANT SPACE WILL BE MEASURED THROUGH ONE WATTHOUR METER. CONTACT NVE METER OPERATIONS FOR MULTIPLE RATE CLASS INSTALLATIONS

NVEnergy

STEWART CABLE
REPLACEMENT PHASE A
BONANZA - NELLIS -
STEWART - LAMB

PROJ. ID: M31342	SCALE: 1" = 30'
SHEET #: 25 OF 28	DATE: 07/19/2010

Sharing of this drawing and the information contained herein shall be only to individuals/parties who have entered into an agreement with Applicant for the completion of work associated with this specific project. Use for purposes other than this specific project requires the written consent of NV Energy.