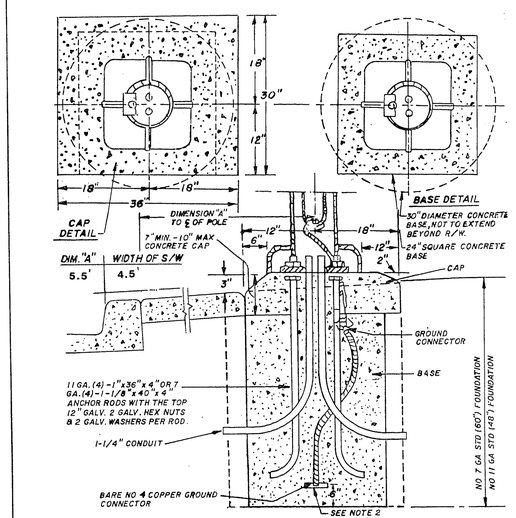

NOTE 1

TOP OF SLOPE IS DOWN AND AWAY FROM THE STANDARD FOR DRAINAGE.

NOTE 2

MADE ELECTRODE SHALL BE IN ACCORDANCE WITH ARTICLE 250-83 OF THE NATIONAL ELECTRICAL CODE & MUST BE COPPER OR COPPER PLATED

TYPICAL STREET LIGHT DETAIL

DRAWING NO. 319

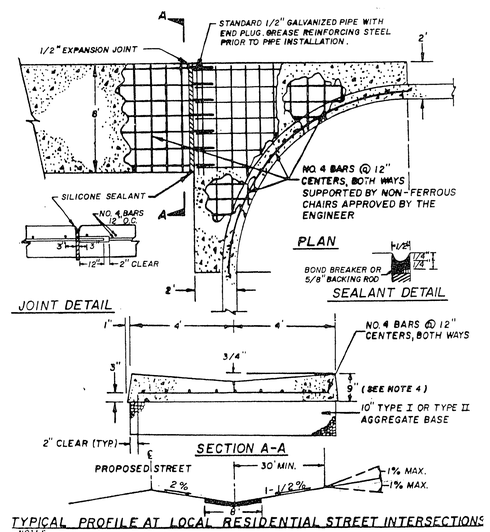

TYPICAL PROFILE AT LOCAL RESIDENTIAL STREET INTERSECTIONS

NOTES.

1. ALL CONCRETE SHALL BE CLASS B.
2. FINISHED ASPHALT CONCRETE SURFACE TO BE FLUSH WITH GROSS GUTTER LIP.
3. CONSTRUCTION OF GROSS GUTTER IS NOT ALLOWED ACROSS MAJOR COLLECTOR OR ARTERIAL STREETS.
4. ADJACENT SPANDREL SHALL BE 9" THICK P.C.C.

TYPICAL VALLEY GUTTER DETAIL

DRAWING NO. 228

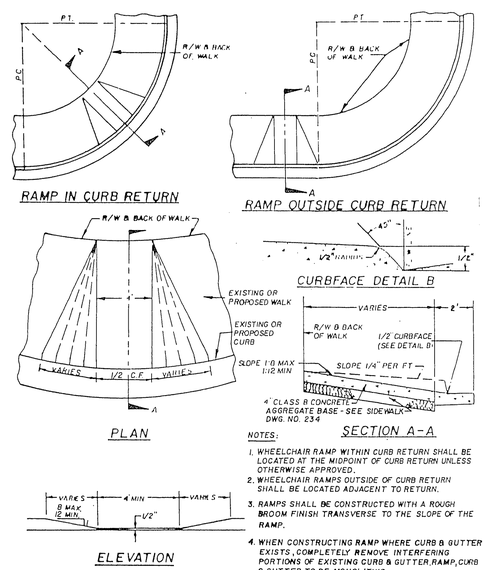

NOTES:

1. WHEELCHAIR RAMP WITHIN CURB RETURN SHALL BE LOCATED AT THE MIDPOINT OF CURB RETURN UNLESS OTHERWISE APPROVED.
2. WHEELCHAIR RAMPS OUTSIDE OF CURB RETURN SHALL BE LOCATED ADJACENT TO RETURN.
3. RAMPS SHALL BE CONSTRUCTED WITH A ROUGH BROOM FINISH TRANSVERSE TO THE SLOPE OF THE RAMP.
4. WHEN CONSTRUCTING RAMP WHERE CURB & GUTTER EXISTS, COMPLETELY REMOVE INTERFERING PORTIONS OF EXISTING CURB & GUTTER, RAMP, CURB & GUTTER TO BE MONOLITHIC.

TYPICAL WHEELCHAIR RAMP DETAIL

DRAWING NO. 235

NOTES:

1. NO HYDRANT SHALL BE LOCATED WITHIN 15' OF ANY DRIVEWAY, 6' OF POWER POLE, LIGHT STANDARD, OR ANY OTHER OBSTRUCTION.
2. IF HYDRANT IS TO BE INSTALLED IN AN EXISTING SIDEWALK, A FULL PANEL OF THE SIDEWALK SHALL BE REMOVED AND REPLACED AFTER INSTALLATION OF THE HYDRANT.
3. WHEN R/W AND FIELD CONDITIONS PERMIT THE FIRE HYDRANT SHALL BE PLACED BEHIND THE SIDEWALK.

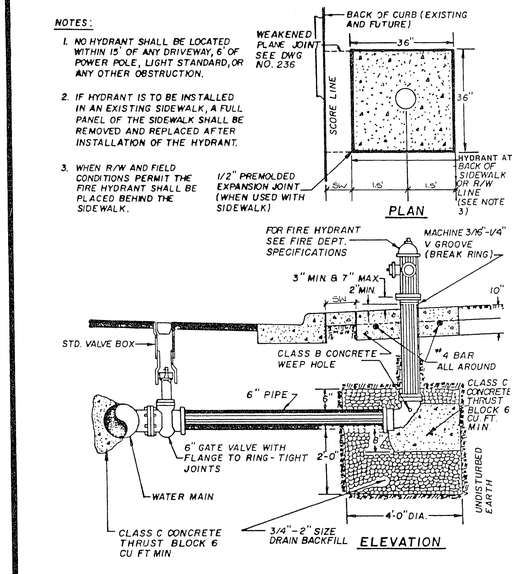

TYPICAL FIRE HYDRANT DETAIL

DRAWING NO. 516

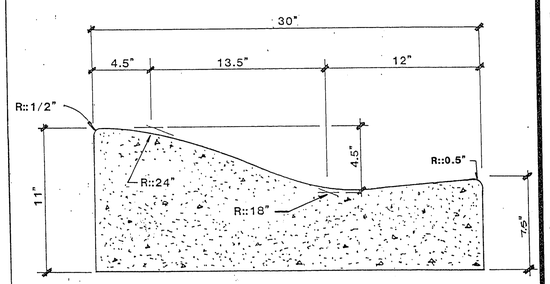

TYPICAL "ROLL" TYPE CURB & GUTTER DETAIL

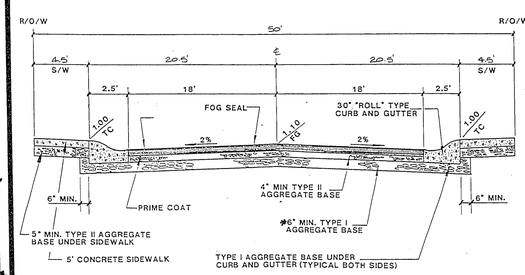

*1. NATIVE MATERIAL TO BE PROCESSED IN ACCORDANCE WITH CLV "STATEMENT OF POLICY FOR USE OF NATIVE MATERIAL IN LIEU OF IMPORTED TYPE I BASE FOR DEDICATED STREETS" DATED JULY 25, 1984.

2. 6" MINIMUM TYPE I OR TYPE II GRAVEL BASE UNDER CURB AND GUTTER.

3. A.C. PAVEMENT TO BE 1/2" (MIN) ABOVE LIP OF GUTTER AFTER COMPACTION.

TYPICAL 50' STREET SECTION W/30" "ROLL" TYPE CURB & GUTTER DETAIL

REV	DATE	BY	REVISION
1	12-8-87	TJAL	REV'D ATTEST LIGHT DETAIL PER E.O.V
2	12-11-87	TJAL	REV'D 2ND SPILLBOX DETAIL.

ESI ENGINEERS & SURVEYORS INC.
TEL 516 GUNNISON RD. WAN. N.Y. 11793 (516) 221-4115

REGISTERED PROFESSIONAL ENGINEER PAUL E. VALENTINE CIVIL STATE OF NEW YORK

SUBMITTED BY:

Call before you Dig.
1-800-227-2600
UNDERGROUND SERVICE (USA)

TITLE: DETAIL SHEET

PROJECT: SOUTH SHORES RAMPART UNIT NO.3

WO NO.	5333
BY	LMW
DATE	8-89
SCALE	

SHEET 2 OF 9 SHEETS

1074-4065-3