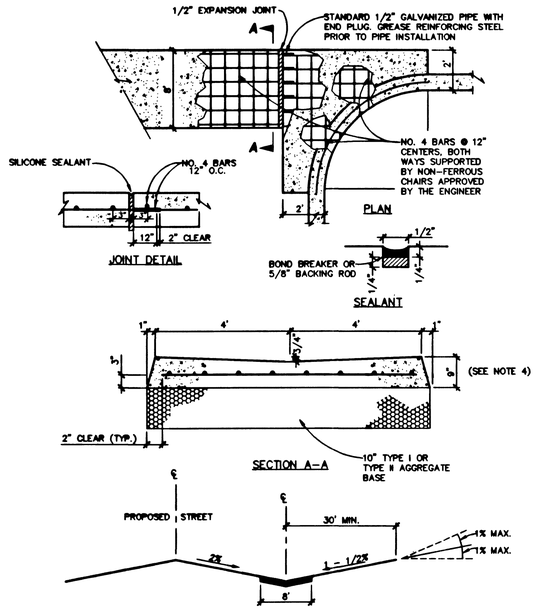

TYPICAL PROFILE AT LOCAL RESIDENTIAL STREET INTERSECTION

NOTES

1. ALL CONCRETE SHALL BE CLASS B.
2. FINISHED ASPHALT CONCRETE SURFACE TO BE FLUSH WITH CROSS GUTTER LIP.
3. CONSTRUCTION OF CROSS GUTTER IS NOT ALLOWED ACROSS MAJOR COLLECTOR OR ARTERIAL STREETS.
4. ADJACENT SPANDREL SHALL BE 9" THICK P.C.C.

8' CROSS GUTTER

STD DWG # 228 SCALE: NONE

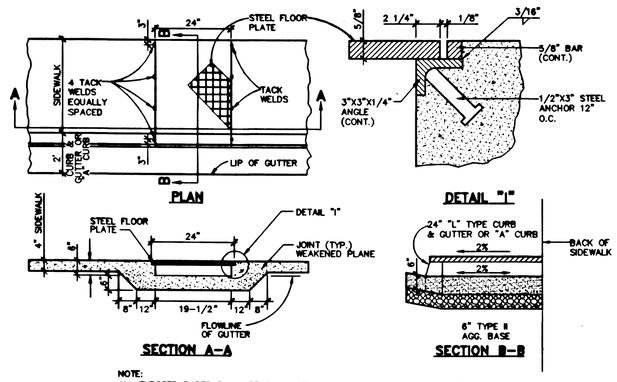

NOTE:
ALL EXPOSED PARTS SHALL BE GALVANIZED AND ALL GALVANIZING DAMAGED BY FABRICATION OR INSTALLATION SHALL RECEIVE TWO COATS OF ALUMINUM PAINT (GALVONOX OR EQUAL).

2' SIDEWALK DRAIN DETAIL

STD DWG # 236 SCALE: NONE

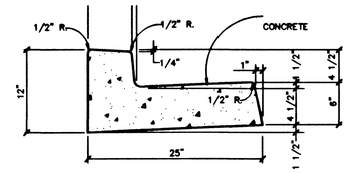

"L" TYPE CURB & GUTTER DETAIL

STD. DWG. #216 SCALE: NONE

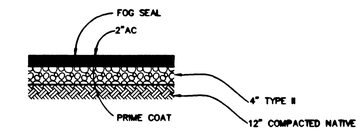

PAVEMENT SECTION

SCALE: NONE

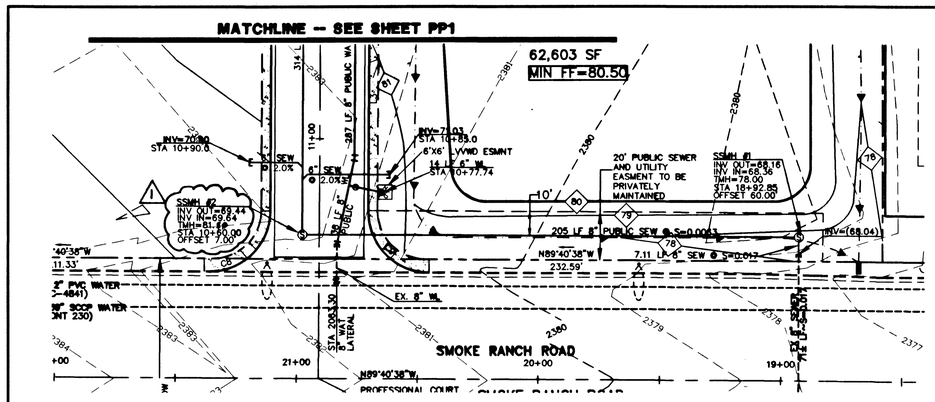

SANITARY SEWER (PUBLIC)

SCALE: HORIZ. 1"=30'
VERT. 1"=3'

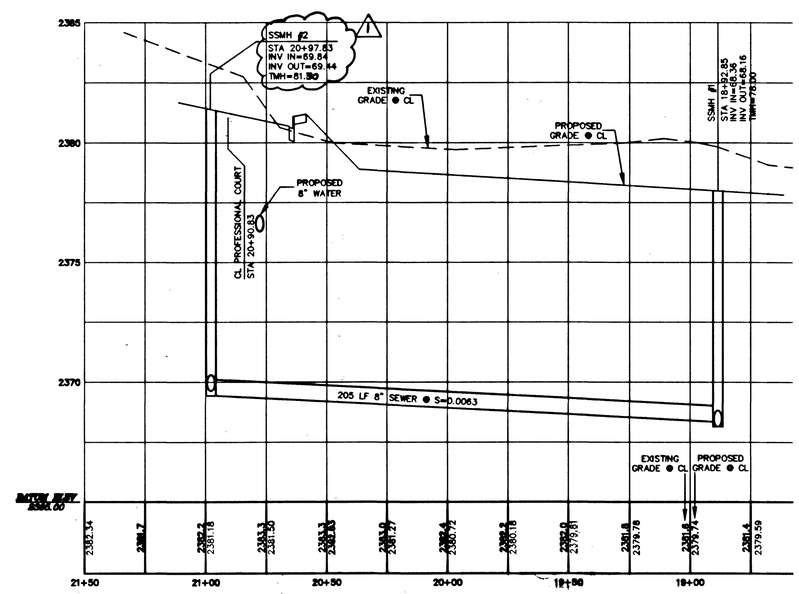

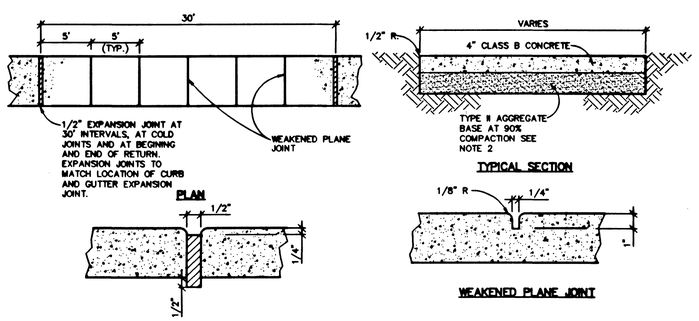

NOTE:

1. ON ALL CURB RETURNS A 1/2" EXPANSION JOINT SHALL BE CONSTRUCTED BETWEEN THE BACK OF CURB AND THE SIDEWALK FOR THE ENTIRE LENGTH OF THE RETURN.
2. THE TYPE II AGGREGATE BASE THICKNESS IS SHOWN ON THE TYPICAL SECTION DRAWINGS 202-207.
3. LONGITUDINAL WEAKENED PLAN JOINT REQUIRED AT MIDPOINT OF SIDEWALK 10' OR WIDER. PER STD. DWG. #234

SIDEWALK DETAIL

STD. DWG. #234 SCALE: NONE

LEGEND

- PROPERTY LINE/RIGHT OF WAY
- LOT LINE
- PRIVATE STREET EASEMENT
- STREET CENTER LINE
- EXISTING CURB
- PROPOSED CURB
- EXISTING EDGE OF A.C. PAVEMENT
- PROPOSED SEWER LINE
- PROPOSED WATER LINE
- PROPOSED SEWER CLEAN OUT
- EXISTING SEWER CLEAN OUT
- PROPOSED SEWER MANHOLE
- EXISTING SEWER MANHOLE
- PROPOSED FIRE HYDRANT
- EXISTING FIRE HYDRANT
- PROPOSED GATE VALVE
- EXISTING GATE VALVE
- EXISTING WATER LINE
- EXISTING SEWER LINE
- 6" SEWER LATERAL W/ WYE
- EXISTING STREET LIGHT
- PROPOSED 100 W HPS STREET LIGHT
- PROPOSED ON-SITE STREET LIGHT
- CONSTRUCTION NOTE
- WATER OR SEWER PLUG

LINE TABLE		
LINE	LENGTH	BEARING
L1	306.70	N00°20'29"E
L2	149.09	N00°20'29"E
L3	98.59	N00°20'29"E

CURVE TABLE				
CURVE	LENGTH	RADIUS	DELTA	TANGENT
C1	192.75	41.00	269°21'48"	41.46
C2	21.19	29.50	41°08'51"	11.07
C3	25.43	29.50	49°23'47"	13.57
C4	192.47	370.50	29°45'49"	98.46
C5	184.38	329.50	28°35'00"	83.94
C6	22.78	14.50	90°01'54"	14.51
C7	22.77	14.50	89°58'06"	14.49
C8	39.26	25.00	89°58'06"	24.99
C9	39.27	25.00	90°00'19"	25.00

N
SCALE: 1"=30'

GRAPHIC SCALE
30 0 15 30 60 120
(IN FEET)
1 inch = 30 ft.

REV	DATE	BY	REVISION
1	7/23/03	KS	REVISE ONSITE GRADING & DIR BARS

RDS/INSIGHT, LLC
3068 E. SUNSET, STE 7
LV, NV 89120
(702) 436-3133

WRIGHT CIVIL ENGINEERS, INC
7310 SMOKE RANCH ROAD, SUITE P
LAS VEGAS, NEVADA 89128
TEL (702) 233-9400 FAX (702) 233-1164
CIVIL STRUCTURAL LAND SURVEYING

SHEET: DETAIL SHEET & SEWER PROFILE

TITLE: SMOKE RANCH CORPORATE CENTER

DRAWN BY: 9.07.01
DESIGNED BY: JSM 01/18/02
CHECKED BY: SFC 03/11/02
SCALE: 1"=30'
PROJECT NO: CN21101101

STEPHEN F. CREWSERA CIVIL No. 13609 NEVADA 03-08-02

SHEET P1
11 OF 12 SHEETS
DRAWING NO. 107-V 3579

41410 43204