THIS AREA INTENTIONALLY LEFT BLANK

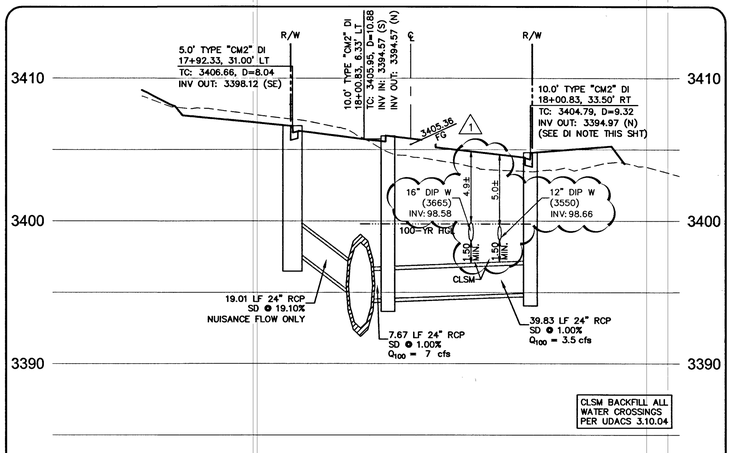

24" STORM DRAIN LINE SHEET: 36 (5)
SUNCREEK RD. @ SKY VISTA
@ STA: 18+00.83
HORZ. 1" = 20
VERT. 1" = 5

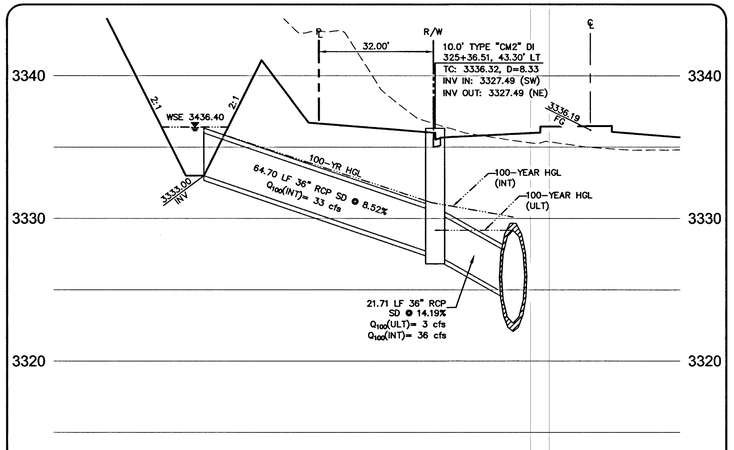

36" STORM DRAIN LINE SHEET: 27 (2)
SKY VISTA DRIVE
@ STA: 325+36.39
HORZ. 1" = 20
VERT. 1" = 5

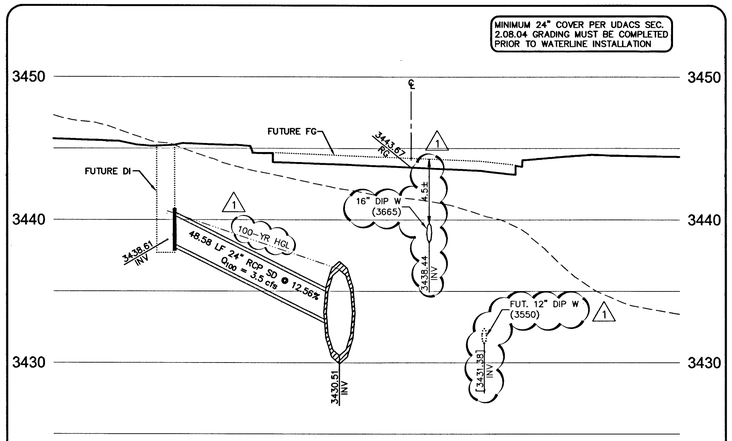

24" STORM DRAIN LINE SHEET: 37 (7)
SUNCREEK RD. @ CROSSBRIDGE
@ STA: 10+36.54
HORZ. 1" = 20
VERT. 1" = 5

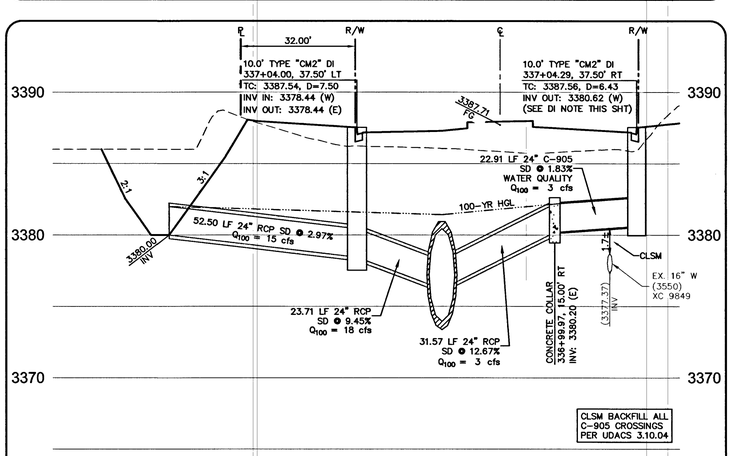

24" STORM DRAIN LINE SHEET: 29 (4)
SKY VISTA DRIVE
@ STA: 336+97.08
HORZ. 1" = 20
VERT. 1" = 5

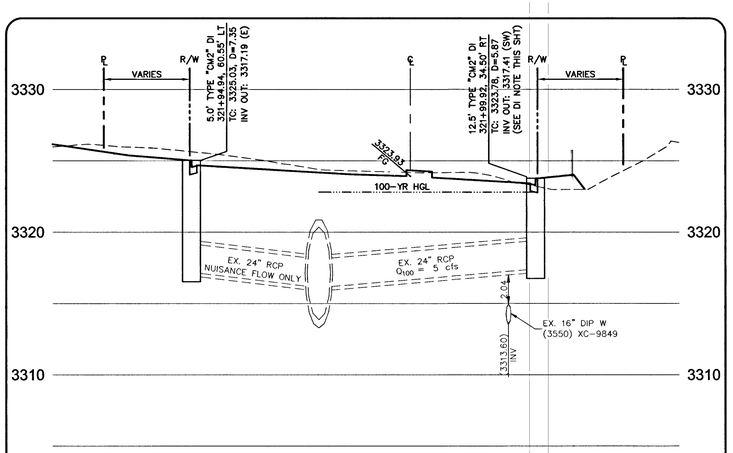

EX. 24" STORM DRAIN LINE SHEET: 26 (1)
SKY VISTA DR. @ DESERT MOON
@ STA: 321+94.32
HORZ. 1" = 20
VERT. 1" = 5

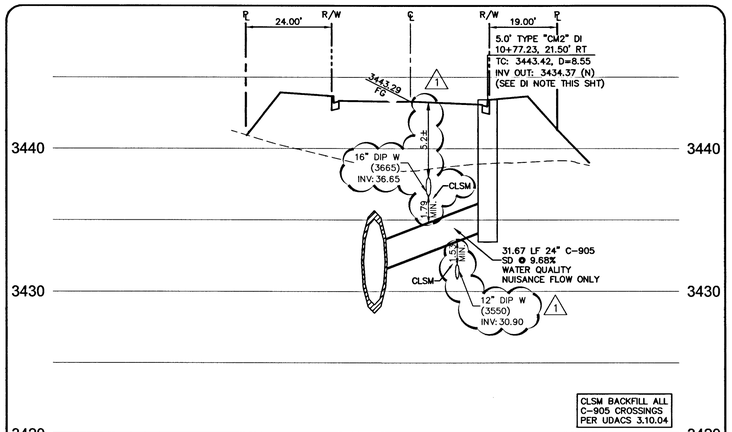

24" STORM DRAIN LINE SHEET: 37 (6)
SUNCREEK RD. @ CROSSBRIDGE
@ STA: 10+78.73
HORZ. 1" = 20
VERT. 1" = 5

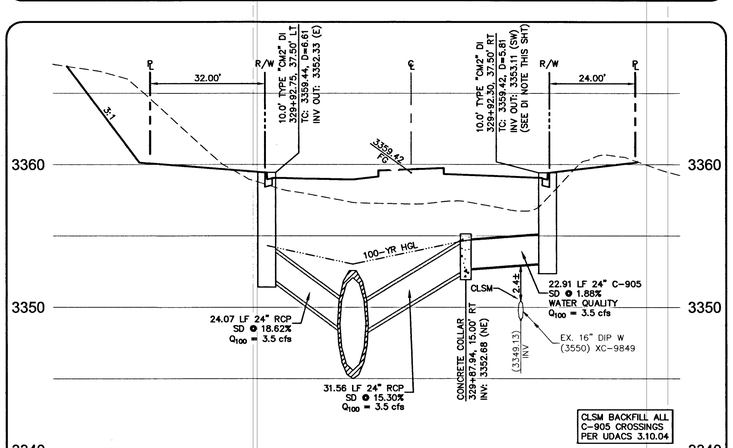

24" STORM DRAIN LINE SHEET: 28 (3)
SKY VISTA DRIVE
@ STA: 329+85.06
HORZ. 1" = 20
VERT. 1" = 5

DROP INLET NOTE

WHERE 10 FEET PARALLEL SEPARATION IS NOT PRACTICABLE:

CAST-IN-PLACE MONOLITHIC POUR WITH WATERSTOP BETWEEN SLAB AND WALLS. BASE, WALLS AND TOP TO BE CONSTRUCTED WITH WATERSTOPS, CENTER BULB, OR FLAT STRIP (VINYLEX, GREENSTREAK PLASTIC PRODUCTS OR APPROVED EQUAL).

APPROVED FOR CONSTRUCTION 1ST APPD. 03/24/15 (1)
LAS VEGAS VALLEY WATER DISTRICT ENGINEERING SERVICES MANAGER
PROJECT NO. #123259 DATE: 7/27/15

ENGINEER - STATE OF NEVADA
DONALD W. JOHNSON
No. 13768
PROFESSIONAL ENGINEER
DATE: 07/24/2015

REV	DATE	DESCRIPTION	AGEN APP	DATE	GCW APP	DATE
1	07/24/15	DOWNSIZED 81ø4 24" WATERMAINS ALONG SKY VISTA & SUNCREEK. REVISED 48" SD LAT. SDMH #16. CURVE, TABLE AND STREET SECTIONS	SB	8/4/15		

PROJECT NO. 62024-221
DESIGN: GCW
DRAWN: GCW
CHECK: JLJ
PLOT DATE: 07-24-15
PLOT TIME: 16:30:25

G.C. WALLACE COMPANIES
ENGINEERS | PLANNERS | SURVEYORS
1555 S. RAINBOW BLVD · LAS VEGAS, NV 89146
T: 702.804.2000 · F: 702.804.2299 · GCWALLACE.COM
LAS VEGAS

F:\Projects\600\62024-221\DWG\Production\V24-221_36-LATI.dwg
Paul Bremond

THE HOWARD HUGHES COMPANY, LLC

VILLAGE 23A/24 - SKY VISTA IMPROVEMENT PLANS
DESERT MOON DR TO ALTA DR INCLUDING SUNCREEK RD

LATERAL PROFILES 1

DRAWING 38
38 OF 54 SHTS

SID NO. 812 PROJECT 5 AND 12
SID NO. 809 PROJECT 13 AND 810 PROJECT 8

H#: 57159 CLV#: 107V6423