STORMWATER RUNOFF MANAGEMENT

(REQUIRED FOR ALL SITES GREATER THAN 1 ACRE (43,560 SQ.FT.))

1. THE OWNER, SITE DEVELOPER, CONTRACTOR AND/OR THEIR AUTHORIZED AGENTS SHALL EACH DAY REMOVE ALL SEDIMENT ,MUD, CONSTRUCTION DEBRIS, OR OTHER POTENTIAL POLLUTANTS THAT MAY HAVE BEEN DISCHARGED TO, OR ACCUMULATE IN, THE PUBLIC RIGHTS OF WAYS OF CLARK COUNTY AS A RESULT OF CONSTRUCTION ACTIVITIES ASSOCIATED WITH THIS SITE DEVELOPMENT OR CONSTRUCTION PROJECT. SUCH MATERIALS SHALL BE PREVENTED FROM ENTERING THE STORM SEWER SYSTEM.
2. ADDITIONAL CONSTRUCTION SITE DISCHARGE BEST MANAGEMENT PRACTICES MAY BE REQUIRED OF THE OWNER AND HIS OR HER AGENTS DUE TO UNFORESEEN EROSION PROBLEMS OR IF THE SUBMITTED PLAN DOES NOT MEET THE PERFORMANCE STANDARDS SPECIFIED IN TITLE 24.40 AND THE LAS VEGAS VALLEY CONSTRUCTION SITE BEST MANAGEMENT PRACTICES MANUAL.
3. TEMPORARY OR PERMANENT STABILIZATION PRACTICES WILL BE INSTALLED ON DISTURBED AREAS AS SOON AS PRACTICABLE AND NO LATER THAN 14 DAYS AFTER THE CONSTRUCTION ACTIVITY IN THAT PORTION OF THE SITE HAS TEMPORARILY OR PERMANENTLY CEASED. SOME EXCEPTIONS MAY APPLY; REFER TO NEVADA STORMWATER GENERAL PERMIT FOR CONSTRUCTION ACTIVITY NVR100000, SECTION III.A.5.
4. AT A MINIMUM, THE CONTRACTOR OR HIS AGENT SHALL INSPECT ALL DISTURBED AREAS, AREAS USED FOR STORAGE OF MATERIALS AND EQUIPMENT THAT ARE EXPOSED TO PRECIPITATION, VEHICLE ENTRANCE AND EXIT LOCATIONS AND ALL BMPS WEEKLY, AND WITHIN 24 HOURS AFTER ANY ACTUAL RAIN EVENT OF 0.5 INCHES OR MORE. THE CONTRACTOR OR HIS AGENT SHALL UPDATE OR MODIFY THE STORMWATER POLLUTION PREVENTION PLAN AS NECESSARY. SOME EXCEPTIONS TO WEEKLY INSPECTIONS MAY APPLY, SUCH AS SUSPENSION OF LAND DISTURBANCE ACTIVITIES. REFER TO NEVADA STORMWATER GENERAL PERMIT FOR CONSTRUCTION ACTIVITY NVR100000, SECTION III.A.12.
5. ACCUMULATED SEDIMENT IN BMPS SHALL BE REMOVED WITHIN SEVEN DAYS AFTER A STORMWATER RUNOFF EVENT OR PRIOR TO THE NEXT ANTICIPATED STORM EVENT, WHICHEVER IS EARLIER. SEDIMENT MUST BE REMOVED WHEN BMP DESIGN CAPACITY HAS BEEN REDUCED BY 50 PERCENT OR MORE.

LEGAL DESCRIPTION

ALL OF GOVERNMENT LOTS 1, 2, 3, 4, 5, 6, 7, 8, 9, 10, 11, 12, 13, 14, 15 AND 16 OF SECTION 12, TOWNSHIP 19 SOUTH, RANGE 59 EAST, M.D.M., CITY OF LAS VEGAS, CLARK COUNTY NEVADA.

BENCHMARK

USDA BRASS CAP ON AN IRON PIPE, 140' SOUTHWEST OF TELEPHONE POLE #26994T, SOUTHWEST CORNER OF THE U.S. 95/KYLE CANYON TURNOFF.

ELEVATION = 2817.62 FEET, 858.813 METERS
N.A.V.D. 88
PER THE CLARK COUNTY VERTICAL CONTROL LAST REVISED 2003

BASIS OF BEARINGS

SOUTH 00°22'12" WEST, BEING THE BEARING OF THE WEST LINE OF THE NORTHWEST QUARTER (NW1/4) OF SECTION 6, TOWNSHIP 19 SOUTH, RANGE 60 EAST, M.D.M., CITY OF LAS VEGAS, CLARK COUNTY, NEVADA, AS SHOWN BY MAP THEREOF IN FILE 151, PAGE 14 OF SURVEYS IN THE CLARK COUNTY RECORDER'S OFFICE, NEVADA.

2.2 CITY OF LAS VEGAS SEWER NOTES

1. ALL CONSTRUCTION AND MATERIALS SHALL BE IN ACCORDANCE WITH THE LATEST EDITION OF THE DESIGN AND CONSTRUCTION STANDARDS FOR WASTEWATER COLLECTION SYSTEMS AND THE UNIFORM STANDARD SPECIFICATIONS FOR PUBLIC WORKS' CONSTRUCTION OFF-SITE IMPROVEMENTS, CLARK COUNTY AREA, NEVADA, AS AMENDED. IT WILL BE THE RESPONSIBILITY OF THE CONTRACTOR TO BE AWARE OF THE CONTENTS OF THE ABOVE SPECIFICATIONS.
2. IT SHALL BE THE CONTRACTOR'S RESPONSIBILITY TO PERFORM CONSTRUCTION AS PER PLANS. ANY ADDITIONS, DELETIONS, OR CHANGES SHALL FIRST MEET WITH THE APPROVAL OF THE CITY ENGINEER.
3. CHISEL "S" OR "G" IN CURBS WHERE SEWER OR GAS LATERALS PASS UNDER THE CURB.
4. POLYVINYL (PVC) SEWER PIPE SHALL MEET ASTM D-3034 SDR 35 SPECIFICATIONS, INSTALLED WITH SAND BEDDING AND BACKFILL OF TYPE II AGGREGATE BASE.
5. ALL MANHOLES PAVED IN STREETS EIGHTY (80') FOOT R/W AND LARGER SHALL HAVE CONCRETE COLLARS. STREETS LESS THAN EIGHTY (80') FOOT R/W WILL REQUIRE RETROFIT IF PAVING DOES NOT CONFORM TO CITY STANDARDS AT THE MANHOLE.
6. TEE SADDLES SHALL BE USED TO CONNECT SEWER LATERALS TO EXISTING MAIN LINES UP TO TWELVE INCH (12") DIAMETER. CONNECTIONS TO FIFTEEN INCH (15") OR LARGER MAINS SHALL REQUIRE SPECIAL PROCEDURES. IN LINE "Y" 'S SHALL BE USED ON LINES TWELVE INCHES (12") OR ABOVE.
7. WATER MAINS SHALL BE PROTECTED IN ACCORDANCE WITH LVVWD STANDARDS WHENEVER A SEWER MAIN CROSSES OVER A WATER MAIN OR THE SEWER IS LESS THAN EIGHTEEN INCH (18") UNDER A WATER MAIN.
8. ALL CONTRACTORS INSTALLING SEWER MAINS THAT WILL BE UNDER THE JURISDICTION OF THE CITY OF LAS VEGAS MUST BE STATE OF NEVADA CLASS "A" CONTRACTORS.
9. THE CITY OF LAS VEGAS WILL NOT ACCEPT ANY SEWER MAINS WHICH HAVE A VERTICAL DEFLECTION OF MORE THAN ONE TENTH (0.1) OF A FOOT FROM THE APPROVED CONSTRUCTION PLANS AT ANY LOCATION. SEWER MAINS FOUND TO EXCEED THIS TOLERANCE WILL HAVE TO BE REPAIRED OR REMOVED OR REPLACED TO THE SATISFACTION OF THE CITY ENGINEER PRIOR TO ACCEPTANCE BY THE CITY OF LAS VEGAS.
10. INSTALLATION OF CURVED SEWER REQUIRES THE USE OF C-900 PIPE WHICH ALLOWS FOR PIPE DEFLECTION AT THE JOINTS.

LAS VEGAS VALLEY WATER DISTRICT (LVVWD) STANDARD NOTES

LVVWD PROJECT # 125227 (REVISED 01/09/2017)

1. NO WORK SHALL BEGIN UNTIL THE WATER PLANS HAVE BEEN APPROVED FOR CONSTRUCTION BY THE LVVWD. FOLLOWING WATER PLAN APPROVAL, NOTICE SHALL BE GIVEN TO THE LVVWD COMMUNICATION SUPPORT CENTER (258-7171) TWO (2) WORKING DAYS PRIOR TO THE START OF CONSTRUCTION. FOR FUTURE INSPECTIONS, NOTICE MUST BE GIVEN BY 2:00 P.M. THE BUSINESS DAY PRIOR TO THE REQUESTED LVVWD INSPECTION. WHEN REQUESTING INSPECTIONS, PLEASE REFER TO THE PROJECT # IDENTIFIED ABOVE.
2. ALL WORK SHALL CONFORM TO LVVWD STANDARD PLATES, DRAWINGS, AND SPECIFICATIONS, AND TO THE 2010 EDITION OF THE UNIFORM DESIGN AND CONSTRUCTION STANDARDS FOR POTABLE WATER SYSTEMS (UDACS). THE LATEST EDITION OF UDACS SHALL SUPERSEDE ANY CONFLICTS CONTAINED IN THE APPROVED DRAWINGS AND/OR SPECIFICATIONS.
3. ALL WORK, EXCEPT AS MODIFIED BY THESE PLANS OR BY NOTE 2 ABOVE, SHALL BE DONE IN ACCORDANCE WITH THE MOST RECENT DRAFT OR EDITION OF THE UNIFORM STANDARD SPECIFICATIONS FOR PUBLIC WORKS CONSTRUCTION OFFSITE IMPROVEMENT, CLARK COUNTY AREA.
4. A SINGLE PIPE MATERIAL SHALL BE USED THROUGHOUT THE PROJECT UNLESS OTHERWISE APPROVED BY THE LVVWD.
5. ALL SERVICE LATERALS TWO (2) INCHES IN DIAMETER AND SMALLER SHALL BE TYPE K COPPER TUBING WITH LVVWD APPROVED SERVICE SADDLES.
6. ALL WATER METER BOXES SHALL BE LOCATED OUTSIDE OF DRIVEWAY AREAS.
7. ALL VALVES SHALL BE LOCATED OUTSIDE OF DRIVEWAYS, VALLEY AND CURB GUTTERS.
8. ALL WATER AND STORM DRAIN OR SANITARY SEWER CROSSINGS SHALL CONFORM TO SECTION 2.22 OF THE 2010 EDITION OF THE UDACS.
9. ALL WATER FACILITIES SHALL BE FILLED, DISINFECTED, PRESSURE TESTED, FLUSHED, FILLED, AND AN ACCEPTABLE WATER SAMPLE OBTAINED, PRIOR TO CONNECTION TO THE LVVWD DISTRIBUTION SYSTEM.
10. THE CONTRACTOR MUST OBTAIN ALL METERS TWO (2) INCHES AND SMALLER FROM LVVWD CENTRAL STORES. TELEPHONE 258-3152 OR 258-3802, TWO (2) WORKING DAYS PRIOR TO METER PICKUP.
11. ANY INTERRUPTION OF SERVICE MUST BE PERFORMED IN ACCORDANCE WITH UDACS SECTION 3.14.01, AND APPROVED BY THE LVVWD INSPECTION DIVISION PRIOR TO SHUTDOWN. PROPER WRITTEN NOTIFICATION MUST BE GIVEN TO ALL AFFECTED CUSTOMERS.
12. ALL WATER FACILITY CONSTRUCTION MATERIALS USED MUST BE AS LISTED ON THE LVVWD PRE-APPROVED MATERIALS AND MANUFACTURER'S LISTING FOR NEW FACILITIES. LATEST REVISION, OR SPECIFICALLY APPROVED ON THESE PLANS.
13. TELEPHONE "CALL BEFORE YOU DIG" AT "811" OR 1-800-227-2600.
14. THE INSTALLATION OF LAS VEGAS VALLEY WATER DISTRICT (LVVWD) MUNICIPAL WATER FACILITIES WITHIN ALL STREETS IS ASSUMED TO BE IN COMPLIANCE WITH THE UNIFORM STANDARDS, INCLUDING THE PLACEMENT OF ASPHALT PAVING STREET SURFACES. ANY REPAIR WORK DONE BY THE LVVWD TO THE MUNICIPAL WATER FACILITIES WILL INCLUDE THE PLACEMENT OF AN APPROPRIATELY SIZED ASPHALT REPAIR PATCH ON THE STREET SURFACE.

    ANY DECORATIVE PAVING SURFACE WITHIN THE STREET IS THE RESPONSIBILITY OF THE OWNER'S ASSOCIATION, OR THE INDIVIDUAL PROPERTY OWNERS IF NO OWNER'S ASSOCIATION IS IN EXISTENCE, OR THE AGENCY HAVING JURISDICTION. DECORATIVE SURFACE MATERIALS PLACED WITHIN THE TEN FOOT EASEMENT ABUTTING A PUBLIC OR PRIVATE STREET, IF DISTURBED BY THE LVVWD DURING THE REPAIR OR OPERATION OF ITS FACILITIES, WILL BE REPLACED BY LVVWD WITH AN APPROPRIATELY SIZED PLAIN FINISH CONCRETE PATCH. THE LVVWD WILL NOT RESTORE, AND WILL NOT BE RESPONSIBLE FOR THE RESTORATION OF, ANY DECORATIVE PAVING SURFACE WITHIN THE STREET. THE LVVWD WILL NOT ATTEMPT TO MATCH COLOR OR FINISH OF ANY ADJACENT MATERIALS.

15. **NO LEAD COMPLIANCE NOTE:**
TO COMPLY WITH THE FEDERAL SAFE DRINKING WATER ACT, ALL WATER WORKS BRASS PRODUCTS PROPOSED TO BE RELOCATED, OR INSTALLED AS NEW MUST BE INSTALLED WITH THE LEAD FREE APPROVED PRODUCT. THE OLD LEADED PRODUCT MAY NOT BE USED.

GRADING NOTES

1. INDICATED GRADES OTHER THAN T.C., F.G. & GUTTER F.L. ARE ROUGH GRADES.
2. THE ROUGH GRADING PLANS SHALL BE ON THE JOB SITE AT ALL TIMES. THE ROUGH GRADING SHALL BE FINISHED IN CONFORMANCE WITH THE LINES AND GRADES SHOWN ON THE PLANS. THE GRADING QUANTITIES ARE BASED ON THE ELEVATION AND DETAILS SHOWN ON THE PLANS. ANY DEVIATIONS FROM THE PLANS WILL RESULT IN QUANTITY CHANGES.
3. CARE SHALL BE EXERCISED IN GRADING CORNER LOTS.
4. ROUGH PAD ELEVATIONS SHALL BE GRADED TO WITHIN 0.1' OF THE PAD ELEVATIONS SHOWN ON THE PLANS. WHEN GRADING IS COMPLETE PER THE PLANS, THE CONTRACTOR SHALL NOTIFY THE ENGINEER SO THAT THE LOTS CAN BE INSPECTED. AT THAT TIME THE ENGINEER SHALL ALSO DECIDE IF ANY ADDITIONAL DITCHES OR BERMS ARE REQUIRED. THE CONTRACTOR IS REQUESTED NOT TO REMOVE ANY OF HIS ROUGH GRADING EQUIPMENT UNTIL HE RECEIVES GRADING APPROVAL FROM THE ENGINEER.
5. SOILS REPORT PREPARED BY GEOTEK, INC., PROJECT NO. 13245-LV, DATED DECEMBER 5, 2016.
6. EARTHWORK QUANTITIES (RAW):
   -CUT = 30,066 CUBIC YARDS.
   -FILL = 43,578 CUBIC YARDS

   A) THE ABOVE QUANTITIES DO NOT REFLECT LOSSES DUE TO SUBSIDENCE OR SHRINKAGE.
   B) THE ABOVE QUANTITIES DO REFLECT USING NATIVE MATERIAL IN LIEU OF TYPE I GRAVEL BASE MATERIAL FOR STREET SECTIONS.
   C) THE ABOVE QUANTITIES DO NOT REFLECT ANY EARTHWORK WHICH MAY BE REQUIRED BY THE ENGINEER TO CONSTRUCT ADDITIONAL PROTECTIVE DITCHES OR BERMS NOT SHOWN ON THESE DRAWINGS.

CITY OF LAS VEGAS FIRE AND RESCUE GENERAL NOTES

1. ALL WORK SHALL BE DONE IN STRICT ACCORDANCE WITH THE LAS VEGAS FIRE AND RESCUE ADOPTED FIRE CODE ORDINANCE # 6325, FOR HYDRANT SPECIFICATIONS, AND HYDRANT INSTALLATION SPECIFICATIONS.
2. ONLY FIRE HYDRANTS THAT ARE ON THE **L**AS **V**EGAS **V**ALLEY **W**ATER **D**ISTRICT'S - **APPROVED PRODUCTS LIST** ARE ALLOWED TO BE INSTALLED.
3. A PERMIT IS REQUIRED FROM LAS VEGAS FIRE AND RESCUE FOR ALL INSTALLATION OF ON-SITE WATER LINES AND FIRE HYDRANTS. THE PERMIT AND CONTRACTORS MATERIAL TEST CERTIFICATE FOR UNDERGROUND PIPING FORM SHALL BE OBTAINED FROM THE FIRE PROTECTION ENGINEER BEFORE COMMENCEMENT OF WORK [IFC 105.7.12]
4. ON ANT RESIDENTIAL OR COMMERCIAL INSTALLATIONS, FIRE HYDRANTS SHALL BE INSTALLED AND FIRE APPARATUS ACCESS ROADS SHALL BE MAINTAINED BEFORE COMMENCEMENT OF ANY COMBUSTIBLE CONSTRUCTION. ALL FIRE HYDRANTS SHALL BE IN GOOD WORKING ORDER AND SHALL BE CAPABLE OF DELIVERING THE REQUIRED FIRE FLOW. [IFC 3310, 3312]
5. TO IDENTIFY THE FIRE HYDRANT LOCATIONS, THE CONTRACTOR SHALL PLACE A BLUE REFLECTIVE MARKER AT THE CENTER LINE OF THE STREET ADJACENT TO THE FIRE HYDRANTS. [IFC 507.5.7.3]
6. ALL UNDERGROUND INSPECTIONS, PRESSURE AND FLUSH VERIFICATIONS OF ALL FIRE HYDRANTS AND FIRE LINES, SHALL BE CONDUCTED BEFORE COVERING THE LINES. CENTER LOADING IS ACCEPTABLE FOR THE HYDRO TESTS WITH PRIOR FIRE PREVENTION APPROVAL. [IFC 106.3]
7. ALL ON-SITE UNDERGROUND WATER MAINS AND MATERIALS SHALL BE U.L. LISTED, A.W.W.A APPROVED AND SHALL BE RATED FOR THE APPROPRIATE WORKING PRESSURE. [IFC 507.2.1, NFPA 24]
8. PAINTING OF CURBS, FIRE HYDRANTS, PADS, PROTECTION OF FIRE HYDRANTS FROM PHYSICAL DAMAGE, AND ALL OTHER WORK NECESSARY PER PLANS SHALL BE COMPLETED BEFORE APPROVAL BY LAS VEGAS FIRE AND RESCUE, FIRE PREVENTION DIVISION. [IFC 507]
9. PRIVATE HYDRANTS SHALL BE PANTED RED. [IFC 507.5.7.1]
10. PRIOR TO THE FINAL OCCUPANCY, A FIRE FLOW TEST SHALL BE WITNESSED BY LAS VEGAS FIRE AND RESCUE, FIRE PREVENTION DIVISION TO VERIFY AVAILABILITY OF THE REQUIRED FIRE FLOW. [IFC 507]
11. FIRE HYDRANT SPACING SHALL BE AS FOLLOWS: [IFC C102]
    - RESIDENTIAL- 500 FT UNSPRINKLERED; 600 FT SPRINKLERED.
    - COMMERCIAL- 300 FT UNSPRINKLERED; 400 FT SPRINKLERED.
12. WHERE NEW WATER MAINS ARE EXTENDED ALONG STREETS OR NEW STREETS ARE INSTALLED WHERE FIRE HYDRANTS ARE NOT NEEDED FOR PROTECTION OF THE STRUCTURES, FIRE HYDRANTS SHALL BE INSTALLED AT MAXIMUM OF 1,000 FOOT SPACING, TO PROVIDE FOR TRANSPORTATION HAZARDS. WHERE STREETS ARE PROVIDED WITH MEDIAN DIVIDERS OR HAVE FOUR (4) OR MORE TRAFFIC LANES AND HAVE A TRAFFIC COUNT OF MORE THAN 30,000 PER DAY, HYDRANTS ARE REQUIRED ON EACH SIDE OF THE STREET SPACED AT 500 FT ON AN ALTERNATING BASIS. [IFC C102.8]
13. NO FIRE HYDRANTS SHALL BE LOCATED WITHIN THE RADIUS OF A CUL-DE-SAC OR WITHIN 20 FEET OF THE PERIMETER OF THE RADIUS OF THE CUL-DE-SAC.
14. NO FIRE HYDRANTS SHALL BE LOCATED WITHIN 6 FT OF ANY CURB RETURN, DRIVEWAY, POWER POLE, STREETLIGHT OR ANY OTHER OBSTRUCTION. [IFC C102.12]
15. A MAXIMUM DISTANCE FROM A FIRE HYDRANT TO A ONE-TWO FAMILY DWELLING SHALL NOT EXCEED 300 FT, AS MEASURED BY AN APPROVED ROUTE. [IFC C102.4]
16. THE MAXIMUM DISTANCE FROM A FIRE HYDRANT TO A FIRE DEPARTMENT CONNECTION (FDC) SHALL NOT EXCEED 100 FT, AS MEASURED BY AN APPROVED ROUTE. [IFC C102.7]
17. THE MAXIMUM DISTANCE FROM A HYDRANT TO THE END OF A DEAD-END STREET SHALL NOT EXCEED 200 FT. [IFC C102.6]
18. TWO (2) SOURCES OF SUPPLY ARE REQUIRED WHENEVER THERE ARE 4 OR MORE FIRE HYDRANTS/SPRINKLER LEAD-INS ARE INSTALLED ON A SINGLE SYSTEM. SECTIONAL CONTROL VALVES SHALL BE INSTALLED SO THAT NO MORE THAN 2 FIRE HYDRANTS CAN BE OUT OF SERVICE DUE TO A BREAK IN A WATER MAIN. [IFC C104]
19. ALL FIRE APPARATUS ACCESS ROADS SHALL BE PAVED TO PROVIDE ALL-WEATHER DRIVING CAPABILITIES, AND SHALL BE DESIGNED AND MAINTAINED TO SUPPORT THE IMPOSED LOADS OF THE FIRE APPARATUS. [IFC 503.2.3]
20. THE GRADIENT FOR THE FIRE APPARATUS ACCESS ROADS SHALL NOT EXCEED 12%. ANGLES OF APPROACH AND ANGLES OF DEPARTURE SHALL NOT EXCEED 6% FOR 25 FEET PRIOR TO OR AFTER THE GRADE CHANGE. ADJACENT TO THE STRUCTURES GRADIENT SHALL NOT EXCEED 6%. [IFC 503.2.7, 503.2.8]
21. THE TURNING RADIUS OF THE FIRE APPARATUS ACCESS ROADS SHALL BE NO LESS THAN 52 FEET OUTSIDE AND 28 FEET INSIDE TURNING RADIUS. [IFC 503.2.4]
22. VERTICAL CLEARANCE OF ALL FIRE APPARATUS ACCESS ROADS SHALL NOT BE LESS THAN 13 FT 6 INS. [IFC 503.2.1]
23. FIRE DEPARTMENT ACCESS ROADS SHALL HAVE A MINIMUM UNOBSTRUCTED WIDTH OF NOT LESS THAN 40 FT FLOW LINE TO FLOW LINE WITH PARALLEL PARKING PERMITTED ON BOTH SIDES. NOT LESS THAN 32 FT WIDE, FLOW LINE TO FLOW LINE, WHERE PARKING IS PERMITTED ONLY ON ONE SIDE OF THE FIRE APPARATUS ACCESS ROAD. NOT LESS THAN 24 FT WIDE, FLOW LINE TO FLOW LINE, WHERE NO PARKING IS PERMITTED ON EITHER SIDE. FIRE LANES THROUGH PARKING LOTS SHALL BE NOT LESS THAN 24 FT. [IFC 503.2.1.1]
24. A FIRE APPARATUS ACCESS ROAD SHALL BE REQUIRED WHEN ANY PORTION OF AN EXTERIOR WALL OF THE FIRST STORY IS LOCATED MORE THAN 150 FT FROM A FIRE DEPARTMENT VEHICLE ACCESS. THE DISTANCE COULD BE INCREASED TO 250 FT IF THE BUILDING IS SPRINKLERED. [IFC 503.1.1]
25. APPROVED SECONDARY FIRE APPARATUS ACCESS SHALL BE PROVIDED FOR 100 OR MORE DWELLING UNITS, ROAD(S) WITH DEAD-ENDS OR WITH A SINGLE POINT OF ACCESS IN EXCESS OF 600 FT. COMMERCIAL AND INDUSTRIAL DEVELOPMENTS WHERE BUILDINGS EXCEED 2 STORIES OR 30 FEET IN HEIGHT, OR EXCEEDING 62,000 SQUARE FEET IN AREA. [IFC 503.1.2]
26. ALL DEAD-END FIRE APPARATUS ROADS AND/OR FIRE LANES, PUBLIC OR PRIVATE, IN EXCESS OF 150 FT IN LENGTH SHALL BE PROVIDED WITH AN APPROVED TURN AROUND HAVING A MINIMUM DIAMETER OF 81 FT. [IFC 503.2.5]
27. ALL FIRE APPARATUS ACCESS ROADS SHALL BE MARKED BY PLACING APPROVED SIGNS AT THE START OF THE DESIGNATED FIRE LANE, ONE SIGN AT THE END OF THE FIRE LANE AND WITH SIGNS AT INTERVALS OF 100 FEET ALONG THE DESIGNATED FIRE LANES. SIGNS TO BE PLACED ON BOTH SIDES OF AN ACCESS ROADWAY IF NEEDED TO PREVENT PARKING ON EITHER SIDE. SIGNS TO BE INSTALLED NO HIGHER THAN 10 FEET OR LESS THAN 6 FEET FROM THE ROADWAY LEVEL. THE CURB ALONG OR ON THE PAVEMENT OR CEMENT (IF NO CURB IS PROVIDED) SHALL BE PAINTED WITH A RED WEATHER RESISTANT PAINT IN ADDITION TO THE SIGNS. [IFC 503.3]
28. ELECTRICALLY CONTROLLED ACCESS GATES SHALL BE PROVIDED WITH AN APPROVED EMERGENCY VEHICLE DETECTOR/RECEIVER SYSTEM. SAID SYSTEM SHALL BE INSTALLED IN ACCORDANCE WITH THE IFC 503.6 AND IFC APPENDIX M.

2.5 CITY OF LAS VEGAS GRADING NOTES

1. IN THE EVENT THAT ANY UNFORESEEN CONDITIONS NOT COVERED BY THESE NOTES ARE ENCOUNTERED DURING GRADING OPERATIONS, THE OWNER/ENGINEER SHALL BE IMMEDIATELY NOTIFIED FOR DIRECTION.
2. IT SHALL BE THE RESPONSIBILITY OF THE CONTRACTOR TO PERFORM ALL NECESSARY CUTS AND FILLS WITHIN THE LIMITS OF THIS PROJECT AND THE RELATED OFF-SITE WORK, SO AS TO GENERATE THE DESIRED SUBGRADE, FINISH GRADES AND SLOPES SHOWN.
3. CONTRACTOR SHALL TAKE FULL RESPONSIBILITY FOR ALL EXCAVATION. ADEQUATE SHORING SHALL BE DESIGNED AND PROVIDED BY THE CONTRACTOR TO PREVENT UNDERMINING OF ANY ADJACENT FEATURES OR FACILITIES AND/OR CAVING OF THE EXCAVATION.
4. THE CONTRACTOR IS WARNED THAT AN EARTHWORK BALANCE WAS NOT NECESSARILY THE INTENT OF THIS PROJECT. ANY ADDITIONAL MATERIAL REQUIRED OR LEFTOVER MATERIAL FOLLOWING EARTHWORK OPERATIONS BECOMES THE RESPONSIBILITY OF THE CONTRACTOR.
5. THE GRADING CONTRACTOR IS RESPONSIBLE TO COORDINATE WITH THE OWNER TO PROVIDE FOR THE REQUIREMENTS OF THE PROJECT STORM WATER POLLUTION PREVENTION PLAN (SWPPP) AND ASSOCIATED PERMIT.
6. CONTRACTOR SHALL GRADE TO THE LINES AND ELEVATIONS SHOWN ON THE PLANS WITHIN THE FOLLOWING HORIZONTAL AND VERTICAL TOLERANCES AND DEGREES OF COMPACTION, IN THE AREAS INDICATED:

	HORIZONTAL	VERTICAL	COMPACTION
A. PAVEMENT AREA SUBGRADE	0.1'+	+0.0' TO -0.1'	SEE SOILS REPORT
B. ENGINEERED FILL	0.5'+	+0.1' TO -0.1'	SEE SOILS REPORT

COMPACTION TESTING WILL BE PERFORMED BY THE OWNER OR HIS REPRESENTATIVE.

7. ALL CUT AND FILL SLOPES SHALL BE PROTECTED UNTIL EFFECTIVE EROSION CONTROL HAS BEEN ESTABLISHED.
8. THE USE OF POTABLE WATER WITHOUT A SPECIAL PERMIT FOR BUILDING OR CONSTRUCTION PURPOSES INCLUDING CONSOLIDATION OF BACKFILL OR DUST CONTROL IS PROHIBITED. THE CONTRACTOR SHALL OBTAIN ALL NECESSARY PERMITS FOR CONSTRUCTION WATER.
9. THE CONTRACTOR SHALL MAINTAIN THE STREETS, SIDEWALKS AND ALL OTHER PUBLIC RIGHT-OF-WAY IN A CLEAN, SAFE AND USABLE CONDITION. ALL SPILLS OF SOIL, ROCK OR CONSTRUCTION DEBRIS SHALL BE PROMPTLY REMOVED FROM THE PUBLICLY OWNED PROPERTY DURING CONSTRUCTION AND UPON COMPLETION OF THE PROJECT. ALL ADJACENT PROPERTY, PRIVATE OR PUBLIC SHALL BE MAINTAINED IN A CLEAN, SAFE AND USABLE CONDITION.
10. IN THE EVENT THAT ANY TEMPORARY CONSTRUCTION ITEM IS REQUIRED THAT IS NOT SHOWN ON THESE DRAWINGS, THE OWNER AGREES TO PROVIDE AND INSTALL SUCH ITEM AT HIS OWN EXPENSE AND AT THE DIRECTION OF THE CITY ENGINEER. TEMPORARY CONSTRUCTION INCLUDES DITCHES, BERMS, ROAD SIGNS AND BARRICADES, ETC.

2.1 CITY OF LAS VEGAS GENERAL NOTES

1. ALL CONSTRUCTION AND MATERIALS SHALL BE IN ACCORDANCE WITH THE "UNIFORM STANDARD SPECIFICATIONS FOR PUBLIC WORKS CONSTRUCTION OFF-SITE IMPROVEMENTS, CLARK COUNTY AREA NEVADA", LATEST ISSUE; THE "UNIFORM STANDARD DRAWINGS FOR PUBLIC WORKS CONSTRUCTION, CLARK COUNTY AREA NEVADA", LATEST REVISED EDITION; THE "SUMMERLIN IMPROVEMENT STANDARDS" FOR WORK IN THE SUMMERLIN AREA; AND OTHER APPLICABLE APPROVED STANDARDS ISSUED BY THE CONTROLLING AGENCY; THE UNIFORM BUILDING CODE; AND ALL LOCAL CITY CODES AND ORDINANCES APPLICABLE, EXCEPT AS NOTED ON THIS SHEET AS "DEVIATIONS FROM STANDARDS".
2. THE EXISTENCE AND LOCATION OF ANY OVERHEAD OR UNDERGROUND UTILITY LINES, PIPES, OR STRUCTURES SHOWN ON THESE PLANS ARE OBTAINED BY A RESEARCH OF THE AVAILABLE RECORDS. EXISTING UTILITIES AS SHOWN FROM CLV PLANS LIBRARY ARE APPROXIMATE AND FOR RECORD PURPOSES. EXISTING UTILITIES ARE LOCATED ON PLANS ONLY FOR THE CONVENIENCE OF THE CONTRACTOR. EXISTING UTILITY SERVICE LATERALS MAY NOT BE SHOWN ON THE PLANS. THE CONTRACTOR SHALL, AT HIS OWN EXPENSE, LOCATE ALL UNDERGROUND AND OVERHEAD INTERFERENCE'S WHICH MAY AFFECT HIS OPERATION DURING CONSTRUCTION AND SHALL TAKE ALL NECESSARY PRECAUTIONS TO AVOID DAMAGE TO SAME. THE CONTRACTOR SHALL USE EXTREME CAUTION WHEN WORKING NEAR OVERHEAD UTILITIES SO AS TO SAFELY PROTECT ALL PERSONNEL AND EQUIPMENT, AND SHALL BE RESPONSIBLE FOR ALL COST AND LIABILITY IN CONNECTION THEREWITH.
3. THE CONTRACTOR SHALL TAKE ALL PRECAUTIONARY MEASURES NECESSARY TO PROTECT EXISTING UTILITY LINES, STRUCTURES AND STREET IMPROVEMENTS WHICH ARE TO REMAIN IN PLACE, FROM DAMAGE, AND ALL SUCH IMPROVEMENTS OR STRUCTURES DAMAGED BY THE CONTRACTOR'S OPERATIONS SHALL BE REPAIRED OR REPLACED SATISFACTORY TO THE CITY ENGINEER AND OWNING UTILITY COMPANY AT THE EXPENSE OF THE CONTRACTOR.
4. ALL CONSTRUCTION SHALL BE AS SHOWN ON THESE PLANS, ANY REVISIONS SHALL HAVE THE PRIOR WRITTEN APPROVAL OF THE CITY ENGINEER.
5. TYPE V CEMENT SHALL BE USED IN ALL OFF-SITE CONCRETE WORK. CONCRETE TO BE 3000 P.S.I. MINIMUM @ 28 DAYS. MIX DESIGNS TO BE APPROVED BY THE CITY, PRIOR TO THE USE ON THE PROJECT.
6. PERMITS ARE REQUIRED FOR ANY WORK IN THE PUBLIC RIGHT-OF-WAY. THE CONTRACTOR SHALL SECURE ALL PERMITS AND INSPECTIONS REQUIRED FOR THIS CONSTRUCTION.
7. EXPANSION JOINTS REQUIRED, MAXIMUM EVERY 300' IN EXTRUDED-TYPE CURB.
8. AC PAVEMENT TO BE ONE-HALF INCH (½") ABOVE LIP OF ALL GUTTERS AFTER COMPACTION, EXCEPT AT SIDEWALK RAMPS AND CROSS GUTTERS.
9. CURB AND GUTTER FOUND TO BE UNACCEPTABLE TO THE CITY OF LAS VEGAS SHALL BE REMOVED AND REPLACED PER STANDARD DRAWING 216.
10. SIDEWALK RAMPS SHALL BE CONSTRUCTED IN EACH QUADRANT OF AN INTERSECTION PER STANDARD DRAWING 235. EXACT LOCATION OF RAMPS MAY BE ADJUSTED IN THE FIELD BY A CITY INSPECTOR.
11. CONTRACTOR SHALL PROVIDE ALL NECESSARY HORIZONTAL AND VERTICAL TRANSITIONS BETWEEN NEW CONSTRUCTION AND EXISTING SURFACES TO PROVIDE FOR PROPER DRAINAGE AND FOR INGRESS AND EGRESS TO NEW CONSTRUCTION. THE EXTENT OF THE TRANSITIONS TO BE AS SHOWN ON PLANS.
12. ALL GRADING WORK SHALL CONFORM TO THE SOILS REPORT AS PREPARED BY ADD GEO, REPORT #ADD FIELD, ADD FIELD APPROVED BY THE CITY ENGINEER, AND AS SHOWN ON THESE PLANS.
13. EXACT LOCATION OF ALL SAWCUT LINES MAY BE ADJUSTED OR DETERMINED IN THE FIELD BY A CITY OF LAS VEGAS ENGINEER IF LOCATION ON PLANS IS NOT CLEARLY SHOWN, OR EXISTING PAVEMENT CONDITION REQUIRES RELOCATIONS.
14. THE CONTRACTOR SHALL TAKE ALL PRECAUTIONS NECESSARY TO PROTECT EXISTING PERMANENT SURVEY MONUMENTS. ANY MONUMENTS DISTURBED SHALL BE REPLACED AND ADJUSTED PER AVAILABLE RECORDS IN ACCORDANCE WITH N.R.S. STATUTE NO. 625.380 & CITY OF LAS VEGAS TITLE 18, APPENDIX D.
15. UTILITY COMPANY METER BOXES, MANHOLE LIDS, VALVE COVERS, ETC., SHALL BE LOCATED OUT OF DRIVEWAYS, DRIVEWAY APRONS, FLOWLINES, AND CROSS GUTTERS UNLESS WRITTEN APPROVAL IS GRANTED BY THE UTILITY COMPANY AND THE CITY ENGINEER.

WALL NOTES:

16. ALL WALLS, NEW OR EXISTING, ARE ONLY SHOWN ON CIVIL PLANS FOR THE PURPOSE OF REVIEWING GRADING RELATIONSHIPS; FLOOD CONTROL AND SIGHT DISTANCE AT INTERSECTIONS. NEW WALLS REQUIRE A SEPARATE PERMIT AND INSPECTION BY THE BUILDING DEPARTMENT.
17. ASPHALT MIX DESIGN MUST BE SUBMITTED AND APPROVED BY THE CITY ENGINEER PRIOR TO THE PLACEMENT OF ASPHALT WITHIN CITY RIGHT OF WAY.
18. CONTRACTOR SHALL ADJUST ALL NEW AND EXISTING INLETS, VALVE BOXES, MANHOLE RIMS, AND SEWER CLEAN OUTS, ETC. TO FINISH GRADE AS APPLICABLE WHETHER OR NOT THEY ARE SHOWN ON THE PLANS.
19. MATERIALS, HANDLING AND PLACEMENT OF PORTLAND CEMENT CONCRETE SHALL BE IN ACCORDANCE WITH APPLICABLE SECTIONS OF NDOT OR THE CLARK COUNTY AREA SPECIFICATIONS (AS APPLICABLE) AND THE PLANS AND DETAILS SHOWN HEREON.
20. WHEN INSTALLING UNDERGROUND FACILITIES THAT REQUIRE UNDERGROUND LOCATING DEVICES SUCH AS MARKER BALLS, LOCATING RIBBON, ETC, THE CONTRACTOR SHALL PROVIDE WRITTEN DOCUMENTATION TO OFFSITE INSPECTION AND TESTING CERTIFYING THAT ALL DEVICES HAVE BEEN PLACED AND VERIFIED TO BE IN GOOD WORKING CONDITION PRIOR TO THE CONSTRUCTION OF ANY ROAD BASE.
21. SANITARY SEWER AND STORM DRAIN FINAL LOCATION MAP(S) SHALL BE PROVIDED TO THE CITY AND APPROVED PRIOR TO ACCEPTANCE OF FACILITY VIDEO INSPECTION. THE MAP(S) SHALL INCLUDE THE HORIZONTAL AND VERTICAL (INVERT) LOCATION OF PUBLIC SEWER MANHOLES, STORM DRAIN MANHOLES AND TRANSITION STRUCTURES, STORM DRAIN LATERALS AT THE CONNECTION TO THE STORM DRAIN MAIN AND AT THE CONNECTION TO A DROP INLET, THE CONNECTION OF SEWER SERVICE LATERALS TO THE SEWER MAIN AND WHERE THE SEWER SERVICE LATERALS EXIT THE PUBLIC RIGHT-OF-WAY, AND STORM DRAIN MAIN ALIGNMENT, INCLUDING DEFLECTION POINTS. THE LOCATION SHALL BE DESCRIBED BY COORDINATES WHICH SHALL BE BASED ON THE OFFICIAL HORIZONTAL AND VERTICAL CONTROL NETWORKS OF THE CITY OF LAS VEGAS. FINAL LOCATION MAPS MUST BE SEALED AND CERTIFIED BE A NEVADA PROFESSIONAL LAND SURVEYOR TO HAVE POSITIONAL CERTAINTIES OF ±0.09 METERS (±0.3 FEET) HORIZONTALLY AND VERTICALLY. A SEPARATE ELECTRONIC COMMA DELIMITED FILE FOR THE SANITARY SEWER AND STORM DRAIN COORDINATES SHALL ALSO ACCOMPANY THE SANITARY SEWER AND STORM DRAIN FINAL LOCATION MAP(S).
22. CCTV VIDEO INSPECTION IS REQUIRED FOR ALL SEWER AND STORM DRAINS. THE CCTV VIDEO INSPECTIONS NEED TO BE PERFORMED PER THE DESIGN AND CONSTRUCTION STANDARDS FOR WASTEWATER COLLECTION SYSTEMS LATEST ADDITION.
23. A SEPARATE BORING PERMIT IS REQUIRED FOR ALL BORING ACTIVITIES.

UTILITY LOCATION NOTE TO CONTRACTOR

EXISTING UTILITY LOCATIONS SHOWN HEREIN ARE APPROXIMATE ONLY. IT SHALL BE THE CONTRACTOR'S RESPONSIBILITY TO DETERMINE THE EXACT VERTICAL AND HORIZONTAL LOCATION OF ALL EXISTING UNDERGROUND UTILITIES PRIOR TO COMMENCING CONSTRUCTION. NO REPRESENTATION IS MADE THAT ALL EXISTING UTILITIES ARE SHOWN HEREON. THE ENGINEER ASSUMES NO RESPONSIBILITY FOR UTILITIES NOT SHOWN OR UTILITIES NOT SHOWN IN THEIR PROPER LOCATIONS. CALL BEFORE YOU DIG: 1 (800) 227-2600

DEVIATIONS FROM STANDARDS

NONE

2.3 CITY OF LAS VEGAS TRAFFIC NOTES

1. ALL CONSTRUCTION SIGNING, BARRICADING, AND TRAFFIC DELINEATION SHALL CONFORM TO THE "MANUAL ON UNIFORM TRAFFIC CONTROL DEVICES", LATEST EDITION.
2. THE STREET SIGN CONTRACTOR SHALL OBTAIN STREET NAMES AND BLOCK NUMBERING FROM THE PLANNING DEPARTMENT PRIOR TO CONSTRUCTION.
3. BEFORE ANY WORK IS STARTED IN THE RIGHT-OF-WAY, THE CONTRACTOR SHALL INSTALL ALL ADVANCE WARNING SIGNS FOR THE CONSTRUCTION ZONE. THE CONTRACTOR SHALL INSTALL TEMPORARY STOP SIGNS AT ALL NEW STREET ENCROACHMENTS INTO EXISTING CITY STREETS WHERE WARRANTED IMMEDIATELY AFTER FIRST GRADING WORK IS ACCOMPLISHED, AND SHALL MAINTAIN SAID SIGNS UNTIL PERMANENT SIGNS ARE INSTALLED.
4. WHEN A DESIGNATED "SAFE ROUTE TO SCHOOL" IS ENCROACHED UPON BY A CONSTRUCTION WORK ZONE AND PUBLIC WORKS STAFF IDENTIFIES A NEED FOR STUDENTS TO BE ASSISTED IN THE SAFE CROSSING THROUGH THAT WORK ZONE, THE CONTRACTOR SHALL BE REQUIRED TO PROVIDE A QUALIFIED "CROSSING GUARD". THE GUARD SHALL BE PRESENT FOR THE FULL DURATION OF TIME THAT CHILDREN ARE LIKELY TO BE PRESENT.
5. IF THE IMPROVEMENTS NECESSITATE THE OBLITERATION, TEMPORARY OBSTRUCTION, TEMPORARY REMOVAL OR RELOCATION OF ANY EXISTING TRAFFIC PAVEMENT MARKING, SUCH PAVEMENT MARKING SHALL BE RESTORED OR REPLACED WITH LIKE MATERIALS TO THE SATISFACTION OF THE CITY TRAFFIC ENGINEER.
6. THE CONTRACTOR SHALL BE RESPONSIBLE FOR PROVIDING AND INSTALLING ALL PERMANENT SIGNS SHOWN ON THE PLANS. ALL NEW TRAFFIC SIGNS SHALL BE FABRICATED WITH DIAMOND GRADE VIP CLASS 6 REFLECTIVE SHEETING OR APPROVED EQUAL. ALL NEW TRAFFIC SIGNS, EXCEPT STREET NAME AND SCHOOL SPEED LIMIT SIGNS, SHALL HAVE 3M SERIES 1160 OR APPROVED EQUIVALENT ANTI-GRAFFITI PROTECTIVE OVERLAY FILM; SCHOOL ZONE SIGNS SHALL HAVE 3M SERIES 1150 ANTI-GRAFFITI PROTECTIVE OVERLAY FILM. STREET NAME SIGNS SHALL CONFORM IN THEIR ENTIRETY TO CURRENT CITY STANDARDS. ALL OTHER SIGNS SHALL BE STANDARD SIZE UNLESS OTHERWISE SPECIFIED ON THE PLANS. ALL SIGN POSTS SHALL BE INSTALLED IN ACCORDANCE WITH THE CURRENT CITY STANDARDS.
7. WHEN A PROPOSED STREET LIGHT STANDARD IS LOCATED WITHIN FIVE (5') FEET OF ANY PROPOSED SIGN SHOWN ON THE PLANS TO BE MOUNTED ON A SIGNPOST, THE SIGN SHALL BE MOUNTED ON THE STREET LIGHT STANDARD AND THE SIGNPOST SHALL BE ELIMINATED.
8. ALL PERMANENT TRAFFIC CONTROL DEVICES CALLED FOR HEREON SHALL BE IN PLACE AND IN FINAL POSITION PRIOR TO ALLOWING ANY PUBLIC TRAFFIC ONTO THE PORTIONS OF THE ROAD(S) BEING IMPROVED HERE UNDER, REGARDLESS OF THE STATUS OF COMPLETION OF PAVING OR OTHER OFF-SITE IMPROVEMENTS CALLED FOR BY THESE PLANS.
9. STREET SIGNS AND STOPS SIGNS SHALL BE INSTALLED PER CITY STANDARD SPECIFICATIONS FOR PLACEMENT OF STREET NAME SIGNS.
10. THE CONTRACTOR SHALL PROVIDE ALL NECESSARY TRAFFIC CONTROL DEVICES AND FLAGGERS TO INSURE THE SAFETY OF THE PUBLIC IN OR AROUND THE WORK AREA. THE CONTRACTOR SHALL HAVE A CERTIFIED ATSSA TRAFFIC CONTROL TECHNICIAN OR IMSA WORK ZONE SAFETY SPECIALIST SET UP, MAINTAIN AND/OR REMOVE ALL TRAFFIC CONTROL DEVICES IN THE CITY OF LAS VEGAS RIGHT OF WAY.
11. WORK IN PUBLIC STREETS, ONCE BEGUN, SHALL BE EXPEDITED TO COMPLETION SO AS TO PROVIDE MINIMUM INCONVENIENCE TO ADJACENT PROPERTY OWNERS AND TO THE TRAVELING PUBLIC.
12. THE CONTRACTOR SHALL BE RESPONSIBLE FOR NOTIFYING CITIZENS AREA TRANSIT (C.A.T.) IF THE CONSTRUCTION INTERRUPTS OR RELOCATES A BUS STOP OR HAS AN ADVERSE EFFECT ON BUS SERVICE ON THAT STREET TO ARRANGE FOR TEMPORARY RELOCATION OF STOP.
13. GUARDS SHALL BE OBTAINED BY CONTACTING THE METROPOLITAN POLICE DEPARTMENT SPECIAL EVENTS UNIT (PHONE # 828-3442) WHO WILL PROVIDE OFFICERS PROPERLY TRAINED IN TRAFFIC CONTROL. FEES FOR THE USE OF THESE OFFICERS SHALL BE SET BY METRO AND WILL BE PAID BY THE CONTRACTOR. THE CONTRACTOR IS RESPONSIBLE FOR ALL ARRANGEMENTS WITH METRO.
14. ANY WORK WITHIN 300' OF A SIGNALIZED INTERSECTION WILL BE NIGHT WORK, UNLESS OTHERWISE DIRECTED BY THE CITY OF LAS VEGAS TRAFFIC ENGINEER.
15. THE CONTRACTOR SHALL CONTACT THE TRAFFIC ENGINEERING DIVISION (TRANSPORTATION SECTION) THROUGH THE PROJECT'S OFFSITE INSPECTOR PRIOR TO INITIATING PAVING TO RECEIVE DIRECTION FOR ANY PERMANENT OR TEMPORARY MODIFICATIONS TO THE APPROVED DRAWINGS REGARDING FINAL PAVEMENT TRANSITIONS, MARKINGS AND SIGNING THAT ARE REQUIRED TO MATCH ADJACENT ROADWAY SEGMENTS. THE CONTRACTOR SHALL PROVIDE A DRAWING FOR APPROVAL BY THE TRAFFIC ENGINEERING DIVISION DEPICTING ANY ADJUSTMENTS TO THE FINAL PAVEMENT MARKINGS AND SIGNAGE, WHICH MAY INCLUDE OMITTING, ADDING OR MODIFYING PAVEMENT MARKINGS AND TRAFFIC CONTROL SIGNS SUCH THAT ADEQUATE TRANSITIONS AND LANE TERMINATIONS BETWEEN ADJACENT ROADWAY SEGMENTS ARE CONSTRUCTED.

2.4 CITY OF LAS VEGAS STREETLIGHT NOTES

1. ALL STREET LIGHTING INSTALLATIONS SHALL BE IN ACCORDANCE WITH THE STREET LIGHTING PLANS, THE "UNIFORM STANDARD SPECIFICATIONS FOR PUBLIC WORKS CONSTRUCTION OFF-SITE IMPROVEMENTS, CLARK COUNTY AREA, NEVADA", LATEST REVISION, AND THE "UNIFORM STANDARD DRAWINGS FOR PUBLIC WORKS CONSTRUCTION OFF-SITE IMPROVEMENTS, CLARK COUNTY AREA, NEVADA", LATEST REVISION, AND ANY ADOPTED SPECIAL AREA STANDARDS.
2. NO DEVIATION OF STREET LIGHT, PULL BOX, CONDUITS (ETC.) LOCATIONS SHALL BE PERMITTED WITHOUT WRITTEN APPROVAL OF TRAFFIC ENGINEERING AND THE CITY ENGINEER.
3. ALL EXISTING STREET LIGHTING SHALL REMAIN OPERATIONAL DURING CONSTRUCTION.
4. ALL STREET LIGHTING CONDUITS STUB SHALL HAVE AT LEAST ONE GREEN #8 THW WIRE INSTALLED, AS TRACER WIRE. WHEN "EMPTY" CONDUIT IS COMPLETELY INSTALLED FROM PB TO PB, IT SHALL HAVE MINIMUM OF 2 #4 AND 1 #8 THW WIRE WITH THE ENDS TAPED OR "SAFE OFF" PRIOR TO FINAL INSPECTION.
5. ANY STRUCTURE SUCH AS BLOCK WALLS, CHAIN LINK FENCES, RETAINING WALLS, ETC., SHALL LEAVE A MINIMUM CLEARANCE IN ACCORDANCE WITH THE USD NO. 320A.
6. AS-BUILT DRAWINGS SHALL BE SUPPLIED TO THE TEFO PRIOR TO ANY PRE-FINAL INSPECTION. THE ASBUILT DRAWING NEEDS TO BE STAMPED AS-BUILT AND SIGNED BY THE PREPARER.
7. SERVICE POINT SHALL BE COORDINATED WITH NV ENERGY COMPANY, AND WHEREVER POSSIBLE, BE LOCATED NEAR THE CENTER OF THE CIRCUIT. SERVICE POINTS SHALL BE SHOWN ON THE CIVIL PLANS.
8. IT SHALL BE ASSUMED THAT IN THE ABSENCE OF AN EXISTING, WORKABLE CIRCUIT TO ATTACH TO, ALL INSTALLATIONS SHALL REQUIRE A NEW SERVICE FOR OPERATION OF THE CIRCUIT.
9. WHEREVER THERE IS AN OVERHEAD UTILITY THAT MAY CONFLICT WITH THE INSTALLATION OF STREET LIGHTING CIRCUITS AND/OR POLES, THESE CONFLICTS MUST BE RESOLVED BETWEEN THE DEVELOPER AND THE UTILITIES INVOLVED, AT NO EXPENSE TO THE CITY OF LAS VEGAS, BEFORE STREETLIGHT BASES ARE INSTALLED.
10. THE CONTRACTOR SHALL FURNISH COMPLETE SERVICE TO TRANSFORMERS AND CONTROL SYSTEMS IF REQUIRED ON PLANS.
11. THE DEVELOPER/OWNER WILL BE REQUIRED TO SUPPLY POWER TO ALL NEW PUBLIC STREET LIGHTS INSTALLED UNDER THIS DESIGN PRIOR TO BOND RELEASE OR PROJECT COMPLETION. THE DEVELOPER/OWNER WILL BE RESPONSIBLE FOR ALL ITEMS ASSOCIATED WITH THE INSTALLATION, CONSTRUCTION, ENERGIZING, MAINTENANCE AND OPERATIONAL COST OF SAID STREET LIGHTS PRIOR TO PROJECT COMPLETION. REFER TO THE PLAN FOR ANY NEW SERVICE REQUIREMENTS. THE TRANSFER OF OWNERSHIP FROM THE DEVELOPER/OWNER TO THE CITY OF LAS VEGAS FOR ALL NEW PUBLIC STREET LIGHT/S AND/OR SERVICE/S INSTALLED UNDER THIS PLAN DESIGN WILL BE IN CONJUNCTION WITH THIS PROJECT COMPLETION. COORDINATE ALL MAINTENANCE AND OPERATIONAL TRANSFERS WITH THE CITY OF LAS VEGAS TRAFFIC ENGINEERING DEPARTMENT (TEFO) AT (702) 229-6331.

APPROVED FOR CONSTRUCTION
LAS VEGAS VALLEY WATER DISTRICT ENGINEERING SERVICES
PROJECT NO. 125227 FIRST APPROVED DATE: 11/14/17
LVVWD APPROVED FIRE FLOW 2,875 GPM AT 20 PSI RESIDUAL

FAST
Call before you UnderGround
1-702-432-5300
FREEWAY & ARTERIAL SYSTEM OF TRANSPORTATION (F.A.S.T)

AVOID HITTING UNDERGROUND TRAFFIC SIGNAL SYSTEMS AND STREET LIGHT SYSTEM CONDUITS. IT'S COSTLY.
Call before you do UnderGround
1-702-455-6000
CLARK COUNTY TRAFFIC OPERATIONS
AND
1-702-432-5300
FREEWAY AND ARTERIAL SYSTEM OF TRANSPORTATION

Call before you Dig
AVOID CUTTING UNDERGROUND UTILITY LINES. IT'S COSTLY.
Call 811
OR
1-800-227-2600
AND
CLARK COUNTY TRAFFIC OPERATIONS
1-702-455-6000

SLATER HANIFAN GROUP
CONSULTING ENGINEERS & PLANNERS
5740 S. ARVILLE STREET #216, LAS VEGAS, NV 89118
PHONE (702) 284-5300 FAX (702) 284-5399

NO.	DESCRIPTION	DATE	BY	APP. DATE	APP.

CITY OF LAS VEGAS

ETHOS THREE ARCHITECTURE
SKYE CANYON SOMERSET ACADEMY
GENERAL NOTES

S12 T19S R59E

DATE: 11/01/17
DRAFTER: DNP
DESIGNER: BCC
CHECKED: STS
PROJECT NO. ETA1601-000

PROFESSIONAL ENGINEER - STATE OF NEVADA
JERRY J. SLATER
Exp. 06/30/2018
CIVIL
No. 14167

C-2
SHEET 2 OF 15

HANSEN NO. 68370
DWG NO. 715-196

PROJ#:125227 AGR:116208 QS:126-12-SW

i:\eta1601-000 skye canyon academy\dwg\improv\eta1601-030cvr.dwg 11/2/2017 8:47 AM Dominic Panglinan

ABBREVIATIONS

AC	ASPHALTIC CONCRETE OR ACRE	FUT	FUTURE	QTY	QUANTITY
AGG	AGGREGATE BASE	GRD	GRADE OR GROUND	R	RADIUS
APN	ASSESSORS PARCEL NUMBER	GB	GRADE BREAK OR GRADE CHANGE	RCA	REINFORCED CONCRETE ARCH
APPROX OR ~	APPROXIMATE	GV	GATE VALVE	RCB	REINFORCED CONCRETE BOX
AVE	AVENUE	HDPE	HIGH DENSITY POLYETHYLENE	RCP	REINFORCED CONCRETE PIPE
@	AT	HOA	HOME OWNERS ASSOCIATION	RD	ROAD
BC	BEGIN CURVE OR BACK OF CURB	HORZ	HORIZONTAL	ROWY ESMT	ROADWAY EASEMENT
BCR	BEGINNING OF CURB RETURN	HP	HIGH POINT	REQD	REQUIRED
BHW	BOTTOM OF HEADWALL	HWL	HIGH WATER LEVEL	REV	REVISION
BLDG	BUILDING	HDWL OR HW	HEADWALL	RG	ROUGH GRADE
BLVD	BOULEVARD	HYD	HYDRAULIC OR HYDRANT	RT OR R	RIGHT
BM	BENCHMARK	ID	INSIDE DIAMETER	R/W, ROW	RIGHT OF WAY
BVC	BEGIN VERTICAL CURVE	IN	INCH	S	SLOPE
BWV	BACK WATER VALVE	INT	INTERSECTION	SCH	SCHEDULE
CC	CLARK COUNTY	INV	INVERT ELEVATION	SD	STORM DRAIN
CCAUSD	CLARK COUNTY AREA UNIFORM STANDARD DRAWINGS	IP	IRON PIPE	SDDI	STORM DRAIN DROP INLET
CCPW	CLARK COUNTY PUBLIC WORKS	IRRG	IRRIGATION	SDMH	STORM DRAIN MANHOLE
CCRFCD	CLARK COUNTY REGIONAL FLOOD DISTRICT	LF	LINEAR FEET	SEC	SECTION
CCWRD	CLARK COUNTY WATER RECLAMATION DISTRICT	LP	LOW POINT	SF	SQUARE FEET
CE	COMMON ELEMENT	LT OR L	LEFT	SHT	SHEET
CL,C/L,C	CENTERLINE	LVVWD	LAS VEGAS VALLEY WATER DISTRICT	SNWA	SOUTHERN NEVADA WATER AUTHORITY
CLR	CLEAR OR CLEARANCE	LWL	LOW WATER LEVEL	SPECS	SPECIFICATIONS
CLSM	CONTROLLED LOW STRENGTH MATERIAL	MAX	MAXIMUM	ST	STREET
CML&C	CEMENT MORTAR LINED AND COATED	MECH	MECHANICAL	SSMH	SANITARY SEWER MANHOLE
CMU	CONCRETE MASONRY UNIT	MH	MANHOLE	STA	STATION
CONC	CONCRETE	MIN	MINIMUM	STD	STANDARD
CT	COURT	MISC	MISCELLANEOUS	STL	STEEL OR STREET LIGHT
CY OR CU YD	CUBIC YARD	MUE	MUNICIPAL UTILITY EASEMENT	SW	SIDEWALK
DCWCS	DESIGN AND CONSTRUCTION FOR WASTEWATER COLLECTION SYSTEMS	NDOT	NEVADA DEPARTMENT OF TRANSPORTATION	SWG	SOUTHWEST GAS
		NPC	NEVADA POWER COMPANY	SWR OR SS	SANITARY SEWER
DET	DETAIL	NTS	NOT TO SCALE	SY	SQUARE YARD
DI	DUCTILE IRON OR DRAIN INLET	NUE	NONEXCLUSIVE UTILITY EASEMENT	TAN	TANGENT
DIA, ø	DIAMETER	OC	ON CENTER	TC	TOP OF CURB
DIP	DUCTILE IRON PIPE	OD	OUTSIDE DIAMETER OR OVERALL DIMENSION	TCD	TRAFFIC CONTROL DEVICE
DR	DRIVE	OFF	OFFSET	TF	TOP OF FLOOR OR TOP OF FOOTING
DWG(S)	DRAWING	ORIG	ORIGINAL	TG	TOP OF GRATE
DWY	DRIVEWAY	PAE	PUBLIC OR PEDESTRIAN ACCESS EASEMENT	THRU	THROUGH
EA	EACH	PB	PULL BOX	THW	TOP OF HEADWALL
ECR	END CURB RETURN	PC	POINT OF CURVE	TP	TOP OF PIPE
EG	EXISTING GROUND	PCC	POINT OF COMPOUND CURVE	TW	TOP OF WALL
EL	ELEVATION	PDE	PUBLIC DRAINAGE EASEMENT	TRW	TOP OF RETAINING WALL
ESMT	EASEMENT	℄ OR PL	PROPERTY LINE	TSW	TOP OF SCREEN WALL
EP	EDGE OF PAVEMENT	POB	POINT OF BEGINNING	TYP	TYPICAL
EVC	END VERTICAL CURVE	POC	POINT OF CURVATURE	UDACS	UNIFORM DESIGN AND CONSTRUCTION STANDARDS
EX OR EXIST	EXISTING	POE	POINT OF ENDING		
FC	FACE OF CURB	PRC	POINT OF REVERSE CURVATURE	VC	VERTICAL CURVE
FF	FINISHED FLOOR	PRELIM	PRELIMINARY	VERT	VERTICAL
FG	FINISHED GRADE	PROP	PROPOSED	VG	VALLEY GUTTER
FGH	FINISHED GRADE, HIGH SIDE	PRV	PRESSURE REDUCING VALVE	WI	WROUGHT IRON
FGL	FINISHED GRADE, LOW SIDE	PUE	PUBLIC UTILITY EASEMENT	WL	WATER LINE
FH	FIRE HYDRANT	PT	POINT OF TANGENT OR POINT	WPZ	WATER PRESSURE ZONE
FL	FLOWLINE	PVC	POLYVINYL CHLORIDE	WT	WEIGHT
FT	FEET OR FOOT	PVI	POINT OF VERTICAL INTERSECTION	WTR	WATER LINE

SPECIAL NOTE

IN THE EVENT THAT ANY TEMPORARY CONSTRUCTION ITEM IS REQUIRED WHICH IS NOT SHOWN ON THESE DRAWINGS, THE OWNER AGREES TO PROVIDE AND INSTALL SUCH ITEM AT HIS OWN EXPENSE AND AT THE DIRECTION OF THE CLARK COUNTY DEPT. OF PUBLIC WORKS. TEMPORARY CONSTRUCTION ITEMS INCLUDE: PAVEMENT TRANSITIONS, PROTECTIVE DITCHES AND BERMS, ROAD SIGNS AND BARRICADES, ETC.

NOTICE TO CONTRACTOR

-QUANTITIES SHOWN ARE ESTIMATES ONLY AND ARE INTENDED TO ILLUSTRATE SCOPE OF WORK. THE CONTRACTOR SHALL BE RESPONSIBLE FOR VERIFYING THE EXACT QUANTITIES INVOLVED.

-EXISTING UTILITY LOCATIONS SHOWN HEREIN ARE APPROXIMATE ONLY. IT SHALL BE THE CONTRACTOR'S RESPONSIBILITY TO DETERMINE THE EXACT VERTICAL AND HORIZONTAL LOCATION OF ALL EXISTING UNDERGROUND UTILITIES PRIOR TO COMMENCING CONSTRUCTION. NO REPRESENTATION IS MADE THAT ALL EXISTING UTILITIES ARE SHOWN HEREON. THE ENGINEER ASSUMES NO RESPONSIBILITY FOR UTILITIES NOT SHOWN OR UTILITIES NOT SHOWN IN THEIR PROPER LOCATIONS. CALL BEFORE YOU DIG: (800) 227-2600

LEGEND

EXISTING	PROPOSED	DESCRIPTION
(1900)	1900	5' CONTOUR
		1' CONTOUR
		STRIPING
		SEWER MANHOLE
		CURB AND GUTTER
EX 8" PVC SS	8" PVC SS	SANITARY SEWER PIPE AND FLOW ARROW
EX 8" PVC WTR	8" PVC WTR	WATER PIPE
		WATER GATE VALVE
		FIRE HYDRANT
		WATER BLOW-OFF
		WATER LATERAL W/ METER
		SANITARY SEWER LATERAL
		STREETLIGHT
		EDGE OF PAVEMENT
		TRAFFIC SIGN
PAD= XXX.X FF = XXX.X	PAD= XXX.X FF = XXX.X	PAD ELEVATION FINISHED FLOOR ELEVATION
(00.00) TC	00.00 TC	ELEVATION
		RETAINING WALL
		STORM DRAIN W/ MANHOLE

	EXISTING GAS GATE VALVE		PROPOSED SCARP AREA
MH	EXISTING UNKNOWN MANHOLE		DRIVEWAY
GAS GAS	EXISTING GAS, SIZE PER PLAN		PROPOSED RIP RAP
	EXISTING POWER POLE		SIGHT VISIBILITY ZONE PER STD DWG NO. 201.2
XXXX	EXISTING TRAFFIC SIGNAL		HANDICAP RAMP
	EXISTING WALL		
	WATER PIPE FITTING		
POC	WATER POINT OF CONNECTION		
POC	SEWER POINT OF CONNECTION		
	DAYLIGHT LINE		
	STREET CENTERLINE		
	RIGHT-OF-WAY		
	MATCHLINE		
	BOUNDARY LINE		
	PHASE LINE		
	PROPERTY LINE		
	FLOWLINE		
	SAWCUT		
	CUT/FILL TRANSITION LINE		
	SIDEWALK		
	EX STRIPING TO BE OBLITERATED		
	GRADE BREAK LINE		
	REFLECTIVE RAISED PAVEMENT MARKERS		
BWV	BACK WATER VALVE		
	WROUGHT IRON FENCE		
	PONY WALL		
	DECORATIVE PERIMETER WALL		
	DECORATIVE PERIMETER RETAINING WALL		
	PROPOSED CURB AND GUTTER WITH RIGHT-OF-WAY AT BACK OF CURB		
	EXISTING CURB AND GUTTER WITH RIGHT-OF-WAY AT BACK OF CURB		
	FUTURE CURB AND GUTTER WITH RIGHT-OF-WAY AT BACK OF CURB		

QUANTITIES

			PRIVATE	PUBLIC
DRAINAGE				
1.	48" TYPE I STORM DRAIN MANHOLE	EA	–	2
2.	48" TYPE II STORM DRAIN MANHOLE	EA	–	4
3.	12" NDS SQUARE DRAIN (OR APPROVED EQUAL) PER DETAILS ON SHEET D-3	EA	–	3
4.	JENSON PRECAST DRAIN INLET PER DETAILS ON SHEET D-3	EA	–	2
5.	12" PVC STORM DRAIN	EA	–	199
6.	18" PVC STORM DRAIN	LF	–	504
7.	24" PVC STORM DRAIN	LF	–	21
8.	36" RCP CLASS IV STORM DRAIN	LF	–	531
9.	RIPRAP D50=8", THK=16"	SF	–	1660
10.	SIDEWALK UNDER DRAIN PER CCAUSD #236	EA	–	1
11.	60" TYPE III STORM DRAIN MANHOLE	EA	–	1
12.	6" WIDE ZURN SIDEWALK TRENCH DRAIN	EA	–	1
13.	2-FT WIDE CONCRETE FLUME	LF	–	12
SEWER SYSTEM				
1.	6" PVC SEWER PIPE (PRIVATE)	LF	321	–
2.	8" PVC SEWER PIPE (PRIVATE)	LF	2	–
3.	SEWER CLEANOUT, SIZE PER PLAN, PER DSCWCS DWG NO. SD-26 (PRIVATE)	EA	4	–
4.	GREASE INTERCEPTOR, PER PLUMBING PLANS	EA	1	–
5.	6" X 6" WYE SEWER CONNECTION PER SD-22 & SD-23 (PRIVATE)	EA	1	–
6.				
7.				
WATER SYSTEM				
1.	FIRE HYDRANT ASSEMBLY W/6" GATE VALVE PER UDACS PLATE NO. 40	EA	4	–
2.	3" PVC WATER PIPE (CLASS 150)	LF	87	–
3.	6" PVC WATER PIPE (CLASS 150)	LF	104	–
4.	8" PVC WATER PIPE (CLASS 150)	LF	1265	86
5.	10" PVC WATER PIPE (CLASS 150)	LF	–	–
6.	6" GATE VALVE WITH VALVE BOX PER UDACS PLATE NO. 30 & 39	EA	4	–
7.	8" GATE VALVE WITH VALVE BOX PER UDACS PLATE NO. 30 & 39	EA	5	–
8.	8" 45 DEGREE BEND PER UDACS PLATE NO. 31	EA	6	–
9.	3" CAP AND 2" BLOW-OFF ASSEMBLY W/CAP PER UDACS PLATE NO. 36	EA	1	–
10.	6" CAP AND 2" BLOW-OFF ASSEMBLY W/CAP PER UDACS PLATE NO. 36	EA	2	–
11.	8" RPDA PER UDACS PLATE NO. 56	EA	–	2
12.	3" X 3" TEE PER UDACS PLATE NO. 31	EA	1	–
13.	8" X 8" TEE PER UDACS PLATE NO. 31	EA	1	–
14.	8" X 6" TEE PER UDACS PLATE NO. 31	EA	5	–
15.	10" X 6" TEE PER UDACS PLATE NO. 31	EA	–	–
16.	8" X 8" TAPPING TEE AND SLEEVE WITH 8" TAPPING VALVE	EA	–	–
17.	10" X 6" REDUCER PER UDACS PLATE NO. 30	EA	–	–
18.	8" X 6" REDUCER PER UDACS PLATE NO. 30	EA	1	–
19.	2" 90 DEGREE BEND PER UDACS PLATE NO. 31	EA	2	–
20.	3" 90 DEGREE BEND PER UDACS PLATE NO. 31	EA	4	–
21.	6" 90 DEGREE BEND PER UDACS PLATE NO. 31	EA	2	–
22.	8" 90 DEGREE BEND PER UDACS PLATE NO. 31	EA	5	–
23.	8" 22.5 DEGREE BEND PER UDACS PLATE NO. 31	EA	–	–
24.	8" 5 DEGREE BEND PER UDACS PLATE NO. 31	EA	–	–
25.	1" COPPER SERVICE W/ 1" RPPA PER UDACS PLATE NO. 4 & 8	EA	1	–
26.	2" COPPER SERVICE W/ 2" METER & 2" RPPA PER UDACS PLATE NO. 3 & 8	EA	–	2
STREET IMPROVEMENTS				
1.	2" A.C. PAVEMENT W/ 4" TYPE II OVER 6" TYPE I AGGREGATE BASE	SY	125,393	–
2.	TYPE "L" CURB & GUTTER PER CCAUSD DWG NO. 216	LF	581	–
3.	TYPE "A" CURB PER DETAIL C ON SHEET D-2	LF	4,289	–
4.	"DEPRESSED" CURB PER DETAIL D ON SHEET D-2	LF	261	–
5.	CUSTOM 6" CURB	LF	413	–
6.	CUSTOM 12" CURB	LF	1052	–
7.	CONCRETE SIDEWALK W/4" TYPE II AGGREGATE BASE	SF	8,760	–
8.	CONCRETE VALLEY GUTTER	SF	490	–
TRAFFIC SIGNALS				
1.	36" X 30" STOP SIGN WITH POST (R4-4)	EA	1	–
2.	9" STREET NAME SIGN (D-3, BROWN W/ WHITE LETTERS)	EA	2	–
3.	BLUE COLORED REFLECTIVE RAISED PAVEMENT MARKER	EA	4	–
4.	12" X 18" RESERVED PARKING SIGN WITH POST (R7-8)	EA	3	–
5.	FIRE & RESCUE SIGNAGE PER CLV ORDINANCE #6325	EA	4	–
6.				
7.				
8.				
DRY UTILITIES				
1.	100W H.P.S. LUMINAIRE STREET LIGHT W/DECORATIVE POLE	EA	–	–
2.	1-1/4" PVC STREET LIGHT CONDUIT WITH (2) #4 AND (1) #8 CONDUCTORS	LF	–	–
3.	NO. 3-1/2 PULL BOX W/METAL COVER	EA	–	–
4.	150 AMP SERVICE PEDESTAL (IRR)	EA	–	–
5.	200 AMP SERVICE PEDESTAL (STLT)	EA	–	–
6.				

APPROVED FOR CONSTRUCTION
LAS VEGAS VALLEY WATER DISTRICT ENGINEERING SERVICES
PROJECT No. 125227 FIRST APPROVED DATE: 11/14/17
LVVWD APPROVED FIRE FLOW 2,875 GPM AT 20 PSI RESIDUAL

FAST
Call before you UnderGround
1-702-432-5300
FREEWAY & ARTERIAL SYSTEM OF TRANSPORTATION (F.A.S.T)

AVOID HITTING UNDERGROUND TRAFFIC SIGNAL SYSTEMS AND STREET LIGHT SYSTEM CONDUITS. IT'S COSTLY.
Call before you do UnderGround
1-702-455-6000
CLARK COUNTY TRAFFIC OPERATIONS
AND
1-702-432-5300
FREEWAY AND ARTERIAL SYSTEM OF TRANSPORTATION

Call before you Dig
AVOID CUTTING UNDERGROUND UTILITY LINES. IT'S COSTLY.
Call 811
OR
1-800-227-2600
AND
CLARK COUNTY TRAFFIC OPERATIONS
1-702-455-6000

SLATER HANIFAN GROUP
CONSULTING ENGINEERS & PLANNERS
5740 S. ARVILLE STREET #216, LAS VEGAS, NV 89118
PHONE (702) 284-5300 FAX (702) 284-5399

NO.	DESCRIPTION	DATE	BY	APP. DATE	APP.

CITY OF LAS VEGAS

ETHOS THREE ARCHITECTURE

SKYE CANYON SOMERSET ACADEMY
GENERAL NOTES AND QUANTITIES

S12 T19S R59E

DATE: 11/01/17
DRAFTER: DNP
DESIGNER: BCC
CHECKED: STS

PROJECT NO.
ETA1601-000

PROFESSIONAL ENGINEER - STATE OF NEVADA
JERRY SLATER
Exp. 06/30/2018
CIVIL
No. 14167

C-3
SHEET 3 OF 15

HANSEN NO. 68370
DWG NO. 715-196

PROJ#:125227 AGR:116208 QS:126-12-SW

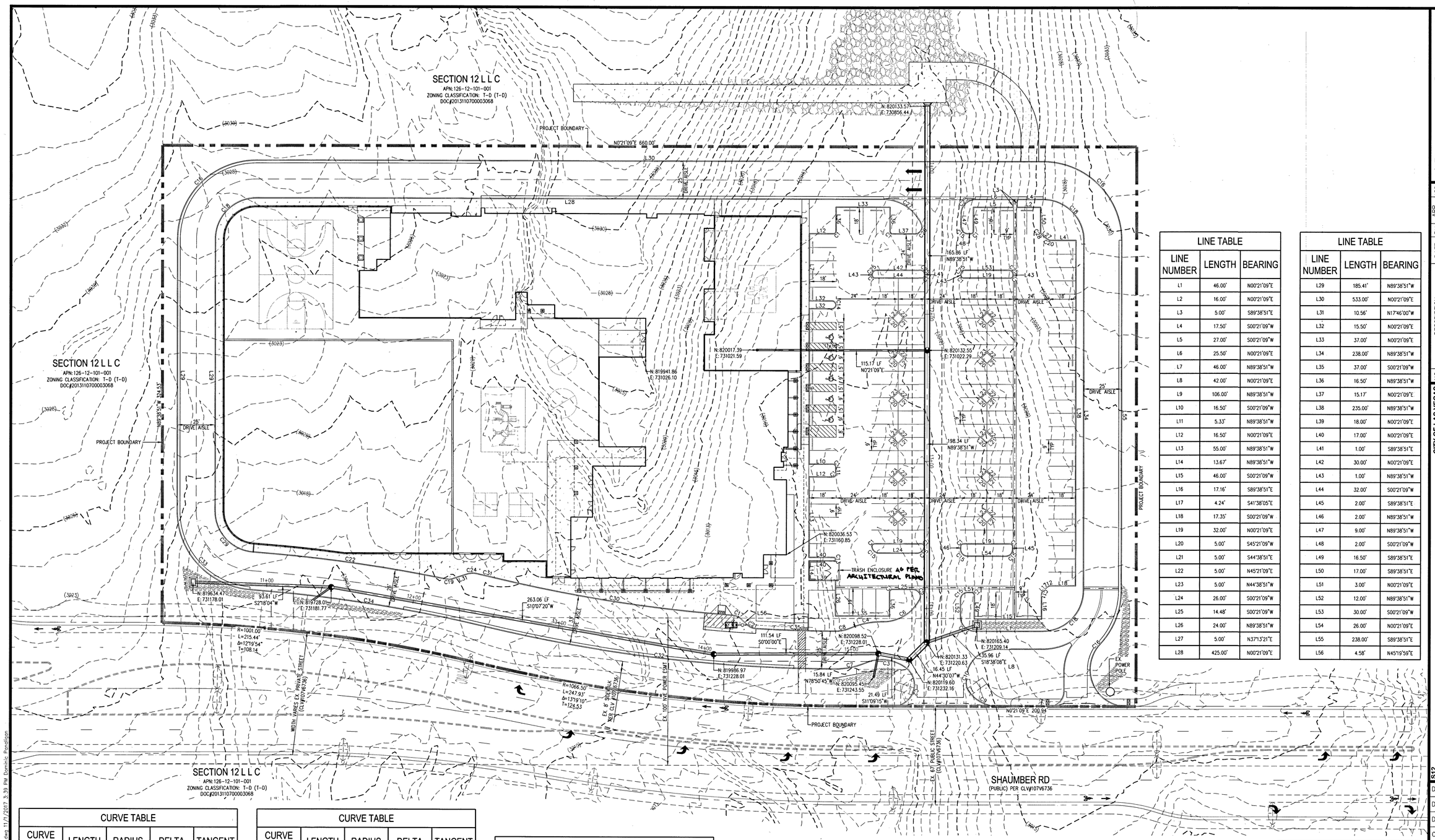

LINE TABLE		
LINE NUMBER	LENGTH	BEARING
L1	46.00'	N00°21'09"E
L2	16.00'	N00°21'09"E
L3	5.00'	S89°38'51"E
L4	17.50'	S00°21'09"W
L5	27.00'	S00°21'09"W
L6	25.50'	N00°21'09"E
L7	46.00'	N89°38'51"W
L8	42.00'	N00°21'09"E
L9	106.00'	N89°38'51"W
L10	16.50'	S00°21'09"W
L11	5.33'	N89°38'51"W
L12	16.50'	N00°21'09"E
L13	55.00'	N89°38'51"W
L14	13.67'	N89°38'51"W
L15	46.00'	S00°21'09"W
L16	17.16'	S89°38'51"E
L17	4.24'	S41°38'05"E
L18	17.35'	S00°21'09"W
L19	32.00'	N00°21'09"E
L20	5.00'	S45°21'09"W
L21	5.00'	S44°38'51"E
L22	5.00'	N45°21'09"E
L23	5.00'	N44°38'51"W
L24	26.00'	S00°21'09"W
L25	14.48'	S00°21'09"W
L26	24.00'	N89°38'51"W
L27	5.00'	N37°13'21"E
L28	425.00'	N00°21'09"E

LINE TABLE		
LINE NUMBER	LENGTH	BEARING
L29	185.41'	N89°38'51"W
L30	533.00'	N00°21'09"E
L31	10.56'	N17°46'00"W
L32	15.50'	N00°21'09"E
L33	37.00'	N00°21'09"E
L34	238.00'	N89°38'51"W
L35	37.00'	S00°21'09"W
L36	16.50'	N89°38'51"W
L37	15.17'	N00°21'09"E
L38	235.00'	N89°38'51"W
L39	18.00'	N00°21'09"E
L40	17.00'	N00°21'09"E
L41	1.00'	S89°38'51"E
L42	30.00'	N00°21'09"E
L43	1.00'	N89°38'51"W
L44	32.00'	S00°21'09"W
L45	2.00'	S89°38'51"E
L46	2.00'	N89°38'51"W
L47	9.00'	N89°38'51"W
L48	2.00'	S00°21'09"W
L49	16.50'	S89°38'51"E
L50	17.00'	S89°38'51"E
L51	3.00'	N00°21'09"E
L52	12.00'	N89°38'51"W
L53	30.00'	S00°21'09"W
L54	26.00'	N00°21'09"E
L55	238.00'	S89°38'51"E
L56	4.58'	N45°19'59"E

CURVE TABLE				
CURVE NUMBER	LENGTH	RADIUS	DELTA	TANGENT
C1	2.36'	1.50'	90°00'00"	1.50'
C2	36.47'	14.50'	144°05'22"	44.75'
C3	28.30'	27.50'	58°57'29"	15.55'
C4	22.18'	53.50'	23°45'18"	11.25'
C5	9.19'	4.50'	117°03'50"	7.35'
C6	30.55'	27.50'	63°38'36"	17.07'
C7	21.70'	53.50'	23°14'14"	11.00'
C8	11.15'	27.50'	23°14'14"	5.65'
C9	22.72'	24.50'	53°07'48"	12.25'
C10	21.04'	9.50'	126°52'12"	19.00'
C11	2.09'	2.50'	48°00'46"	1.11'

CURVE TABLE				
CURVE NUMBER	LENGTH	RADIUS	DELTA	TANGENT
C12	1.83'	2.50'	41°59'14"	0.96'
C13	3.14'	1.00'	180°00'00"	INFINITY
C14	7.85'	2.50'	180°00'00"	INFINITY
C15	7.07'	4.50'	90°00'00"	4.50'
C16	84.04'	53.50'	90°00'00"	53.50'
C17	7.48'	10.50'	40°50'13"	3.91'
C18	43.20'	27.50'	90°00'00"	27.50'
C19	4.91'	9.50'	29°36'05"	2.51'
C20	1.61'	2.50'	36°52'12"	0.83'
C21	6.93'	9.50'	41°46'44"	3.63'
C22	132.05'	1052.00'	7°11'31"	66.11'

CURVE TABLE				
CURVE NUMBER	LENGTH	RADIUS	DELTA	TANGENT
C23	14.92'	9.50'	90°00'00"	9.50'
C24	5.62'	10.50'	30°38'31"	2.88'
C25	3.93'	2.50'	90°00'00"	2.50'
C26	8.88'	4.50'	113°02'08"	6.80'
C27	32.14'	27.50'	66°57'52"	18.19'
C28	2.32'	2.50'	53°07'48"	1.25'
C29	41.14'	27.50'	85°42'35"	25.51'
C30	161.34'	1007.50'	9°10'32"	80.85'
C31	14.72'	1060.00'	0°47'45"	7.36'

*LINE AND CURB TABLE ARE TO BACK OF CURB

CURVE TABLE				
CURVE NUMBER	LENGTH	RADIUS	DELTA	TANGENT
C32	238.67'	1041.50'	13°07'48"	119.86'
C33	80.03'	53.50'	85°42'35"	49.64'
C34	161.69'	1026.00'	9°01'45"	81.01'
C35	53.39'	1015.50'	3°00'44"	26.70'

SCALE – 1"=30' FEET (0 30 60)

BASIS OF BEARINGS

THE BASIS OF BEARING IS SOUTH 00°22'12" WEST, BEING THE BEARING OF THE WEST LINE OF THE NORTHWEST QUARTER (NW1/4) OF SECTION 6, TOWNSHIP 19 SOUTH, RANGE 60 EAST, M.D.M., CITY OF LAS VEGAS, CLARK COUNTY, NEAVAD, AS SHOWN BY MAP THEREOF IN FILE 151, PAGE 14 OF SURVEYS IN THE CLARK COUNTY RECORDER'S OFFICE, NEVADA.

BENCHMARK

USDA BRASS CAP ON AN IRON PIPE, 140' SOUTHWEST OF TELEPHONE POLE #269941, SOUTHWEST CORNER OF THE U.S. 95/KYLE CANYON TURNOFF.

ELEVATION = 2817.62 FEET, 858.813 METERS
N.A.V.D. 88
PER THE CLARK COUNTY VERTICAL CONTROL LAST REVISED 2003

FAST Call before you UnderGround 1-702-432-5300 FREEWAY & ARTERIAL SYSTEM OF TRANSPORTATION (F.A.S.T.)

AVOID HITTING OVERHEAD POWER LINES. IT'S COSTLY. CALL BEFORE YOU DO OVERHEAD 1-702-227-2929

Call before you Dig AVOID CUTTING UNDERGROUND UTILITY LINES. IT'S COSTLY. Call 811 OR 1-800-227-2600

SLATER HANIFAN GROUP
CONSULTING ENGINEERS & PLANNERS
5740 S. ARVILLE STREET #216, LAS VEGAS, NV 89118
PHONE (702) 284-5300 FAX (702) 284-5399

NO.	DESCRIPTION	DATE	BY	APP. DATE	APP.

CITY OF LAS VEGAS

ETHOS THREE ARCHITECTURE
SKYE CANYON SOMERSET ACADEMY
HORIZONTAL CONTROL PLAN

S12 T19S R59E

DATE: 11/1/17
DRAFTER: DNP
DESIGNER: BCC
CHECKED: STS

PROJECT NO. ETA1601-000

PROFESSIONAL ENGINEER – STATE OF NEVADA – JERRY J. SLATER – Exp. 06/30/2018 – CIVIL – No. 14167

H-1
SHEET 4 OF 15

HANSEN NO. 68370
DWG NO. 715-196

X:\eta1601-000 silver canyon academy\dwg\tenyon\eta1601-000hor.dwg 11/1/2017 3:39 PM Dominic Pandigan

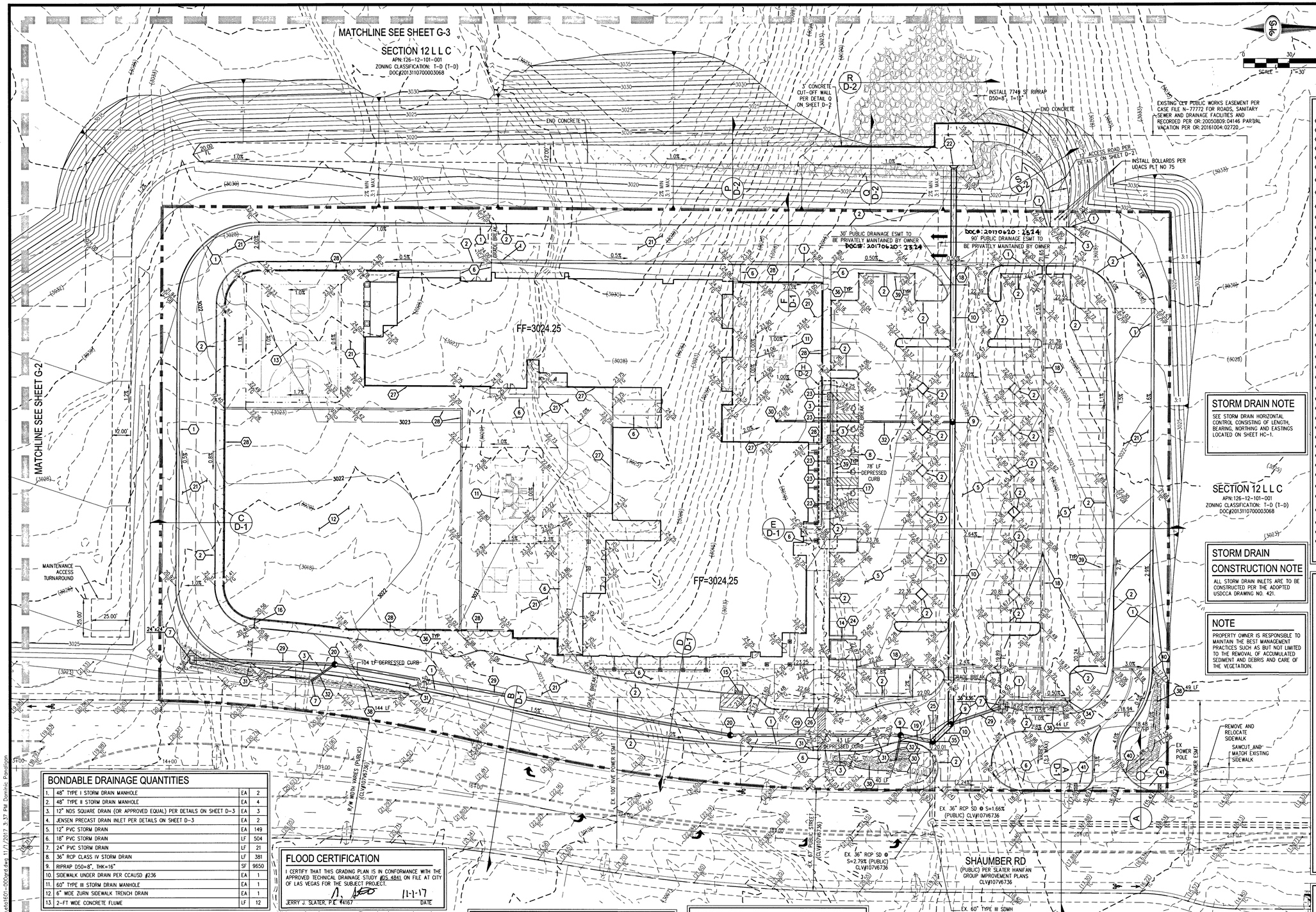

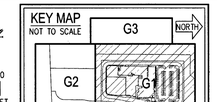

GRADING NOTES

1. "L" TYPE CURB PER CCAUSD DWG NO. 216.
2. "A" CURB PER DETAIL C ON SHEET D-2.
3. "DEPRESSED" CURB PER DETAIL D ON SHEET D-2.
4. CURB OPENING PER DETAIL E ON SHEET D-2.
5. AC PARKING AREA. SEE SOILS REPORT FOR SECTION.
6. 4" THICK CONCRETE SIDEWALK OVER 5" MIN TYPE II AGG. BASE. SEE LANDSCAPE PLAN FOR WIDTH AND FINISH.
7. INSTALL JENSEN PRECAST DRAIN INLET PER DETAILS ON SHEET D7-3 (GRATE SIZE PER PLAN) WITH APRON.
8. HANDICAPPED VAN ACCESSIBLE PARKING STALL IN ACCORDANCE WITH LVMC 19.08.110(2) WITH SIGNAGE PER LVMC 11.52.135.
9. 48" TYPE II STORM DRAIN MANHOLE PER CCAUSD NO. 401 & 405.
10. 36" RCP CLASS III SD, LENGTH PER PLAN.
11. CHILD PLAY AREA. SEE LANDSCAPE PLANS FOR CONSTRUCTION MATERIALS AND HORIZONTAL DIMENSIONS.
12. TURF FIELD. SEE LANDSCAPE PLANS FOR HORIZONTAL DIMENSIONS AND STRIPING DETAILS.
13. BASKETBALL COURT. SEE LANDSCAPE PLANS FOR HORIZONTAL DIMENSIONS AND STRIPING DETAILS.
14. TRASH ENCLOSURE. SEE ARCHITECTURAL PLANS FOR CONSTRUCTION MATERIALS AND DETAILS.
15. SIDEWALK RAMP WITH ARMOR TILE TRUNCATED DOMES OR EQUIVALENT PER CCAUSD NO. 235, CASE II & 235.1.
16. 6" WIDE ZURN TRENCH DRAIN (OR APPROVED EQUAL) PER DETAIL G ON SHEET D-2.
17. INSTALL PRECAST BUMPER BLOCKS PER CCAUSD NO. 238 OR EQUIVALENT (TYPICAL, WHERE SHOWN ON PLANS).
18. 2-FT WIDE VALLEY GUTTER PER DETAIL F ON SHEET D-2.
19. INSTALL 24" PVC STORM DRAIN.
20. 48" TYPE I STORM DRAIN MANHOLE PER CCAUSD NO. 401.
21. AC PAVEMENT. SEE SOILS REPORT FOR SECTION.
22. RCP END SECTION PER NDOT R-2.3.1. SEE SHEET D-3 FOR DETAIL.
23. ARMOR TILE TRUNCATED DOMES OR EQUIVALENT PER CCAUSD NO. 235, CASE II & 235.1.
24. CONCRETE PAD PER DETAIL K ON SHEET D-2.
25. REMOVE END SECTION AND 9 LF EX. 36" RCP SD.
26. CONSTRUCT SIDEWALK RAMPS WITH ARMOR TILE TRUNCATED DOMES PER DETAIL A ON SHEET D-2.
27. 6" WIDE CONCRETE CURB PER DETAIL L ON SHEET D-2.
28. 12" WIDE CONCRETE CURB PER DETAIL I ON SHEET D-2.
29. INSTALL 18" PVC STORM DRAIN.
30. 12" NDS SQUARE DRAIN (OR APPROVED EQUAL) PER DETAILS ON SHEET D-3.
31. TRANSITION CURB PER DETAIL N ON D-2.
32. INSTALL 12" PVC STORM DRAIN.
33. INSTALL SIDEWALK DRAIN PER CCAUSD #236.
34. CURB OPENING PER DETAIL M ON SHEET D-2.
35. 60" TYPE III STORM DRAIN MANHOLE PER CCAUSD NO. 401 & 405.
36. INSTALL PEDESTRIAN GATE PER ARCHITECT PLANS BY OTHERS.
37. INSTALL 2' WIDE CONCRETE FLUME PER DETAIL O ON SHEET D-2.
38. INSTALL TREATMENT SWALE: MIN 9" DEEP, 4:1 SIDE SLOPE, D50=8" (LANDSCAPE ROCK), AND LESS THAN OR EQUAL TO 1% SLOPE.
39. INSTALL WHEEL STOP PER CCAUSD NO. 238.
40. CURB OPENING PER DETAIL T ON SHEET D-2.
41. DIRECTIONAL SIDEWALK RAMP PER DETAIL U ON SHEET D-2

STORM DRAIN NOTE

SEE STORM DRAIN HORIZONTAL CONTROL CONSISTING OF LENGTH, BEARING, NORTHING AND EASTINGS LOCATED ON SHEET HC-1.

STORM DRAIN CONSTRUCTION NOTE

ALL STORM DRAIN INLETS ARE TO BE CONSTRUCTED PER THE ADOPTED USDCCA DRAWING NO. 421.

NOTE

PROPERTY OWNER IS RESPONSIBLE TO MAINTAIN THE BEST MANAGEMENT PRACTICES SUCH AS BUT NOT LIMITED TO THE REMOVAL OF ACCUMULATED SEDIMENT AND DEBRIS AND CARE OF THE VEGETATION.

STORM WATER RUNOFF MANAGEMENT

(REQUIRED FOR ALL SITES GREATER THAN 1 ACRE (43,560 SQ.FT.))

1. THE OWNER, SITE DEVELOPER, CONTRACTOR AND/OR THEIR AUTHORIZED AGENTS SHALL EACH DAY REMOVE ALL SEDIMENT, MUD, CONSTRUCTION DEBRIS, OR OTHER POTENTIAL POLLUTANTS THAT MAY HAVE BEEN DISCHARGED TO, OR ACCUMULATE IN, THE PUBLIC RIGHTS OF WAYS OF CLARK COUNTY AS A RESULT OF CONSTRUCTION ACTIVITIES ASSOCIATED WITH THIS SITE DEVELOPMENT OR CONSTRUCTION PROJECT. SUCH MATERIALS SHALL BE PREVENTED FROM ENTERING THE STORM SEWER SYSTEM.
2. ADDITIONAL CONSTRUCTION SITE DISCHARGE BEST MANAGEMENT PRACTICES MAY BE REQUIRED OF THE OWNER AND HIS OR HER AGENTS DUE TO UNFORESEEN EROSION PROBLEMS OR IF THE SUBMITTED PLAN DOES NOT MEET THE PERFORMANCE STANDARDS SPECIFIED IN TITLE 24.40 AND THE LAS VEGAS VALLEY CONSTRUCTION SITE BEST MANAGEMENT PRACTICES MANUAL.
3. TEMPORARY OR PERMANENT STABILIZATION PRACTICES WILL BE INSTALLED ON DISTURBED AREAS AS SOON AS PRACTICABLE AND NO LATER THAN 14 DAYS AFTER THE CONSTRUCTION ACTIVITY IN THAT PORTION OF THE SITE HAS TEMPORARILY OR PERMANENTLY CEASED. SOME EXCEPTIONS MAY APPLY; REFER TO NEVADA STORMWATER GENERAL PERMIT FOR CONSTRUCTION ACTIVITY NVR100000, SECTION III.A.5.
4. AT A MINIMUM, THE CONTRACTOR OR HIS AGENT SHALL INSPECT ALL DISTURBED AREAS, AREAS USED FOR STORAGE OF MATERIALS AND EQUIPMENT THAT ARE EXPOSED TO PRECIPITATION, VEHICLE ENTRANCE AND EXIT LOCATIONS AND ALL BMPS WEEKLY, AND WITHIN 24 HOURS AFTER ANY ACTUAL RAIN EVENT OF 0.5 INCHES OR MORE. THE CONTRACTOR OR HIS AGENT SHALL UPDATE OR MODIFY THE STORMWATER POLLUTION PREVENTION PLAN AS NECESSARY. SOME EXCEPTIONS TO WEEKLY INSPECTIONS MAY APPLY, SUCH AS SUSPENSION OF LAND DISTURBANCE ACTIVITIES. REFER TO NEVADA STORMWATER GENERAL PERMIT FOR CONSTRUCTION ACTIVITY NVR100000, SECTION III.A.12.
5. ACCUMULATED SEDIMENT IN BMPS SHALL BE REMOVED WITHIN SEVEN DAYS AFTER A STORMWATER RUNOFF EVENT OR PRIOR TO THE NEXT ANTICIPATED STORM EVENT, WHICHEVER IS EARLIER. SEDIMENT MUST BE REMOVED WHEN BMP DESIGN CAPACITY HAS BEEN REDUCED BY 50 PERCENT OR MORE.

FEMA FLOOD ZONE DESIGNATION

THE PROJECT SITE IS LOCATED WITHIN A FEMA DESIGNATED ZONE 'X' (AREA OUTSIDE THE 500 YEAR FLOODPLAIN), ON THE FLOOD INSURANCE RATE MAP (FIRM) PANEL: 32003C1750E, DATED SEPTEMBER 27, 2002.

BONDABLE DRAINAGE QUANTITIES

1.	48" TYPE I STORM DRAIN MANHOLE	EA	2
2.	48" TYPE III STORM DRAIN MANHOLE	EA	4
3.	12" NDS SQUARE DRAIN (OR APPROVED EQUAL) PER DETAILS ON SHEET D-3	EA	3
4.	JENSEN PRECAST DRAIN INLET PER DETAILS ON SHEET D-3	EA	2
5.	12" PVC STORM DRAIN	EA	149
6.	18" PVC STORM DRAIN	LF	504
7.	24" PVC STORM DRAIN	LF	21
8.	36" RCP CLASS IV STORM DRAIN	LF	381
9.	RIPRAP D50=8", THK=16"	SF	9650
10.	SIDEWALK UNDER DRAIN PER CCAUSD #236	EA	1
11.	60" TYPE III STORM DRAIN MANHOLE	EA	1
12.	6" WIDE ZURN SIDEWALK TRENCH DRAIN	EA	1
13.	2-FT WIDE CONCRETE FLUME	LF	12

FLOOD CERTIFICATION

I CERTIFY THAT THIS GRADING PLAN IS IN CONFORMANCE WITH THE APPROVED TECHNICAL DRAINAGE STUDY #DS 4841 ON FILE AT CITY OF LAS VEGAS FOR THE SUBJECT PROJECT.

JERRY J. SLATER, P.E. #14167 — DATE 11-1-17

NOTES

1. THE CONTRACTOR SHALL VERIFY ALL CONDITIONS OF EXISTING STRUCTURES INCLUDING LOCATION, ELEVATION, DIMENSIONS AND REPORT ALL DISCREPANCIES TO THE ENGINEER PRIOR TO CONSTRUCTION.
2. ALL IMPROVEMENTS TO BE PROTECTED FROM EROSION DURING CONSTRUCTION THROUGH THE USE OF A STORM WATER POLLUTION PREVENTION PLAN (SWPPP).
3. MAXIMUM/MINIMUM SLOPES AND MINIMUM STREET SECTIONS NOT TO EXCEED THAT SHOWN ON THE GEOTECH REPORT.
4. SEE SHEET C-2 FOR LEGEND AND DETAIL SHEET D-1 FOR STREET SECTIONS AND DETAILS.
5. ADD 2800 TO PLAN GRADES WITH THE EXCEPTION OF FINISHED FLOORS AND EXISTING AND PROPOSED CONTOURS.
6. ALL PRIVATE STORM DRAINS ARE PUBLIC DRAINAGE EASEMENTS TO BE PRIVATELY MAINTAINED BY HOA.
7. CONTRACTOR TO VERIFY ALL HANDICAP ACCESSIBLE ROUTES AND PARKING STALLS ARE IN CONFORMANCE WITH A.D.A. ACCESSIBILITY GUIDELINES AND DO NOT EXCEED MAXIMUM SLOPES IN ANY DIRECTION PRIOR TO CONSTRUCTION. CONTRACTOR TO NOTIFY ENGINEER OF ANY DISCREPANCIES.
8. CONSTRUCT A.D.A. ROUTE, HAND RAILS, PARKING, SIGNAGE & RAMPS TO COMPLY WITH ICC/ANSI A117.1-2003
9. ALL ON-SITE STORM DRAINS AND THE ASSOCIATED FACILITIES ARE PRIVATELY OWNED AND MAINTAINED.
10. ANY FUTURE DEVELOPMENT WILL REQUIRE A TECHNICAL DRAINAGE STUDY UPDATE.
11. CONCRETE SIDEWALKS SHALL NOT EXCEED 5% IN A LONGITUDINAL DIRECTION OR 2% IN A CROSS SLOPE DIRECTION. ANY CONCRETE SIDEWALK LANDING SHALL NOT EXCEED 2% IN ANY DIRECTION AND SHALL BE A MINIMUM OF 5 FEET BY 5 FEET.

BENCHMARK

USDA BRASS CAP ON AN IRON PIPE, 140' SOUTHWEST OF TELEPHONE POLE #269947, SOUTHWEST CORNER OF THE U.S. 95/KYLE CANYON TURNOFF.

ELEVATION = 2817.62 FEET, 858.813 METERS
N.A.V.D. 88
PER THE CLARK COUNTY VERTICAL CONTROL LAST REVISED 2003

BASIS OF BEARINGS

THE BASIS OF BEARING IS SOUTH 00°22'12" WEST, BEING THE BEARING OF THE WEST LINE OF THE NORTHWEST QUARTER (NW1/4) OF SECTION 6, TOWNSHIP 19 SOUTH, RANGE 60 EAST, M.D.M., CITY OF LAS VEGAS, CLARK COUNTY, NEVADA, AS SHOWN BY MAP THEREOF IN FILE 151, PAGE 14 OF SURVEYS IN THE CLARK COUNTY RECORDER'S OFFICE, NEVADA.

DISCLAIMER NOTE

1. EXISTING UTILITY LOCATIONS SHOWN HEREON ARE APPROXIMATE ONLY. IT SHALL BE THE CONTRACTOR'S RESPONSIBILITY TO DETERMINE THE EXACT VERTICAL AND HORIZONTAL LOCATION OF ALL EXISTING UNDERGROUND UTILITIES PRIOR TO COMMENCING CONSTRUCTION. NO REPRESENTATION IS MADE THAT ALL EXISTING UTILITIES ARE SHOWN HEREON. THE ENGINEER ASSUMES NO RESPONSIBILITY FOR UTILITIES NOT SHOWN IN THEIR PROPER LOCATION.
2. FOR ROADWAY WIDENING AND HALF STREET IMPROVEMENTS THE CONTRACTOR SHALL VERIFY CROSS SLOPES FROM EXISTING PAVEMENT SAWCUT LINE TO PROPOSED EDGE OF PAVEMENT OR PROJECTED LIP OF CURB PRIOR TO SUBGRADE PREPARATION AND CONSTRUCTION OF PROPOSED CURB LINE. IF MINIMUM OR MAXIMUM CROSS SLOPES DO NOT MEET AGENCY STANDARDS THE CONTRACTOR SHALL NOTIFY THE ENGINEER PRIOR TO THE PLACEMENT OF TYPE II AND CURB.

GRADING QUANTITIES

EARTHWORK QUANTITIES (RAW):
-CUT = 30,066 CUBIC YARDS.
-FILL = 43,578 CUBIC YARDS

A. THE ABOVE QUANTITIES DO NOT REFLECT LOSSES DUE TO SUBSIDENCE OR SHRINKAGE.
B. THE ABOVE QUANTITIES DO REFLECT USING NATIVE MATERIAL IN LIEU OF TYPE I GRAVEL BASE MATERIAL FOR STREET SECTIONS.
C. THE ABOVE QUANTITIES DO NOT REFLECT ANY EARTHWORK WHICH MAY BE REQUIRED BY THE ENGINEER TO CONSTRUCT ADDITIONAL PROTECTIVE DITCHES OR BERMS NOT SHOWN ON THESE DRAWINGS.
D. ALL ONSITE GRADING SHALL COMPLY WITH THE CONDITIONS SET FORTH IN THE GEOTECHNICAL REPORT REFERENCED ON SHEET C-2.

FAST Call before you UnderGround 1-702-432-5300 FREEWAY & ARTERIAL SYSTEM OF TRANSPORTATION (F.A.S.T)

AVOID HITTING OVERHEAD POWER LINES. IT'S COSTLY. CALL BEFORE YOU DO OVERHEAD 1-702-227-2929

Call before you Dig AVOID CUTTING UNDERGROUND UTILITY LINES. IT'S COSTLY. Call 811 OR 1-800-227-2600

SLATER HANIFAN GROUP
CONSULTING ENGINEERS & PLANNERS
5740 S. ARVILLE STREET #216, LAS VEGAS, NV 89118
PHONE (702) 284-5300 FAX (702) 284-5399

NO.	DESCRIPTION	DATE	BY	APP DATE	APP

CITY OF LAS VEGAS

ETHOS THREE ARCHITECTURE
SKYE CANYON SOMERSET ACADEMY
GRADING PLAN I

S12 T19S R59E

DATE: 11/01/17
DRAFTER: DNP
DESIGNER: BCC
CHECKED: STS

PROJECT NO. ETA1601-000

PROFESSIONAL ENGINEER - STATE OF NEVADA — JERRY J. SLATER — Exp. 06/30/2018 — CIVIL — No. 14167 — 11-1-17

G-1
SHEET 5 OF 15

HANSEN NO. 68370
DWG NO. 715-196

J:\eta1601-000 skye canyon academy\dwg\improv\eta1601-000grd.dwg 11/1/2017 3:37 PM Dominic Pandigan

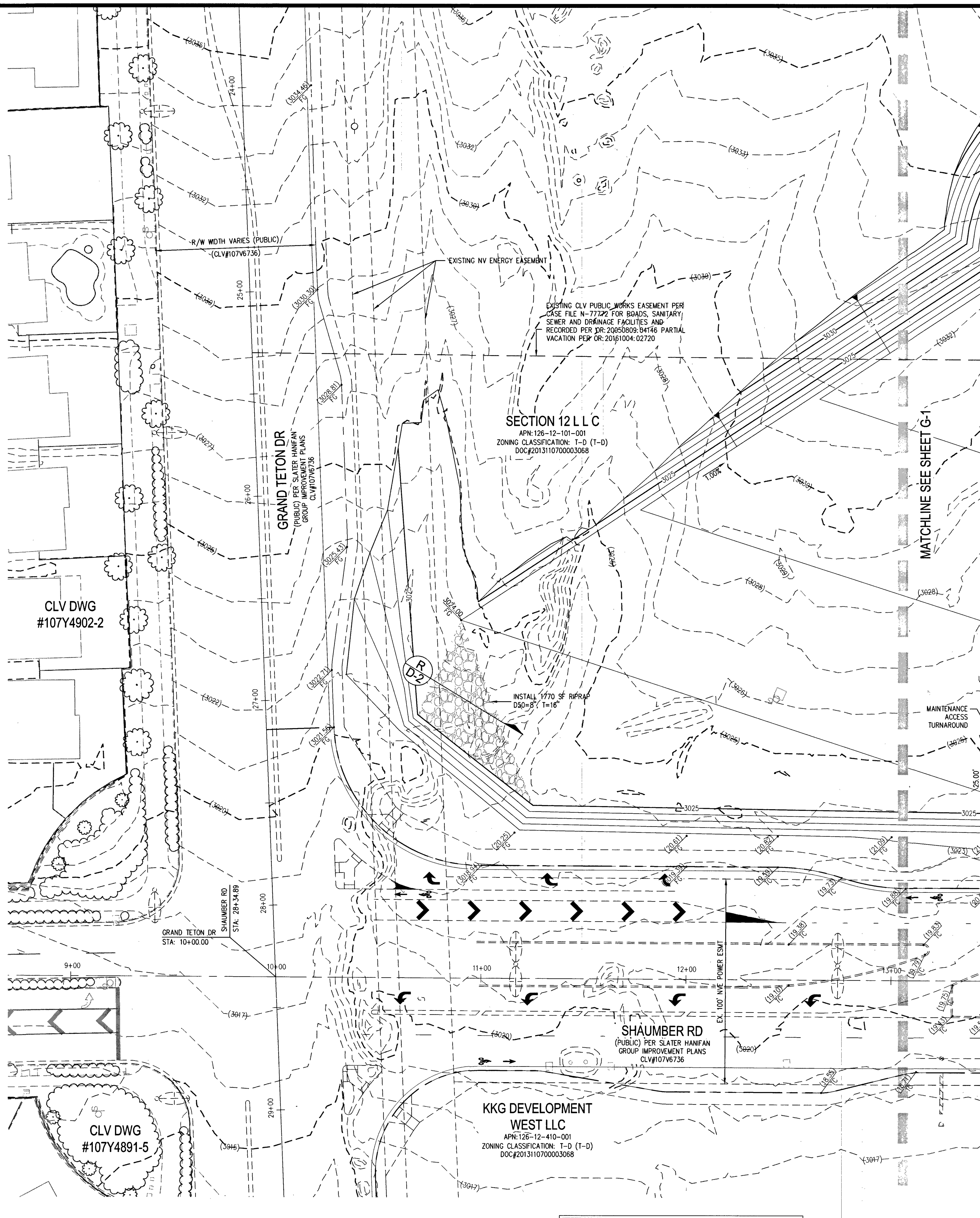

SCALE - 1"=30' FEET (0, 30, 60)

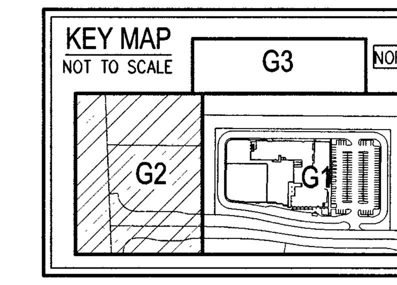

GRADING NOTES

1. "L" TYPE CURB PER CCAUSD DWG NO. 216.
2. "A" CURB PER DETAIL C ON SHEET D-2.
3. "DEPRESSED" CURB PER DETAIL D ON SHEET D-2.
4. CURB OPENING PER DETAIL E ON SHEET D-2.
5. AC PARKING AREA. SEE SOILS REPORT FOR SECTION.
6. 4" THICK CONCRETE SIDEWALK OVER 5" MIN TYPE II AGG. BASE. SEE LANDSCAPE PLAN FOR WIDTH AND FINISH.
7. INSTALL JENSEN PRECAST DRAIN INLET PER DETAILS ON SHEET DT-3 (GRATE SIZE PER PLAN) WITH APRON.
8. HANDICAPPED VAN ACCESSIBLE PARKING STALL IN ACCORDANCE WITH LVMC 19.08.110(2) WITH SIGNAGE PER LVMC 11.52.135.
9. 48" TYPE II STORM DRAIN MANHOLE PER CCAUSD NO. 401 & 405.
10. 36" RCP CLASS III SD, LENGTH PER PLAN.
11. CHILD PLAY AREA. SEE LANDSCAPE PLANS FOR CONSTRUCTION MATERIALS AND HORIZONTAL DIMENSIONS.
12. TURF FIELD. SEE LANDSCAPE PLANS FOR HORIZONTAL DIMENSIONS AND STRIPING DETAILS.
13. BASKETBALL COURT. SEE LANDSCAPE PLANS FOR HORIZONTAL DIMENSIONS AND STRIPING DETAILS.
14. TRASH ENCLOSURE. SEE ARCHITECTURAL PLANS FOR CONSTRUCTION MATERIALS AND DETAILS.
15. SIDEWALK RAMP WITH ARMOR TILE TRUNCATED DOMES OR EQUIVALENT PER CCAUSD NO. 235, CASE II & 235.1.
16. 6" WIDE ZURN TRENCH DRAIN (OR APPROVED EQUAL) PER DETAIL G ON SHEET D-2.
17. INSTALL PRECAST BUMPER BLOCKS PER CCAUSD NO. 238 OR EQUIVALENT (TYPICAL, WHERE SHOWN ON PLANS).
18. 2-FT WIDE VALLEY GUTTER PER DETAIL F ON SHEET D-2.
19. INSTALL 24" PVC STORM DRAIN.
20. 48" TYPE I STORM DRAIN MANHOLE PER CCAUSD NO. 401.
21. AC PAVEMENT. SEE SOILS REPORT FOR SECTION.
22. RCP END SECTION PER NDOT R-2.3.1. SEE SHEET D-3 FOR DETAIL.
23. ARMOR TILE TRUNCATED DOMES OR EQUIVALENT PER CCAUSD NO. 235, CASE II & 235.1.
24. CONCRETE PAD PER DETAIL K ON SHEET D-2.
25. REMOVE END SECTION AND 9 LF EX. 36" RCP SD.
26. CONSTRUCT SIDEWALK RAMPS WITH ARMOR TILE TRUNCATED DOMES PER DETAIL A ON SHEET D-2.
27. 6" WIDE CONCRETE CURB PER DETAIL L ON SHEET D-2.
28. 12" WIDE CONCRETE CURB PER DETAIL I ON SHEET D-2.
29. INSTALL 18" PVC STORM DRAIN.
30. 12" NDS SQUARE DRAIN (OR APPROVED EQUAL) PER DETAILS ON SHEET D-3.
31. TRANSITION CURB PER DETAIL N ON D-2.
32. INSTALL 12" PVC STORM DRAIN.
33. INSTALL SIDEWALK DRAIN PER CCAUSD #236.
34. CURB OPENING PER DETAIL M ON SHEET D-2.
35. 60" TYPE III STORM DRAIN MANHOLE PER CCAUSD NO. 401 & 405.
36. INSTALL PEDESTRIAN GATE PER ARCHITECT PLANS BY OTHERS.
37. INSTALL 2' WIDE CONCRETE FLUME PER DETAIL O ON SHEET D-2.
38. INSTALL TREATMENT SWALE: MIN 9" DEEP, 4:1 SIDE SLOPE, D50=3" (LANDSCAPE ROCK), AND LESS THAN OR EQUAL TO 1% SLOPE.
39. INSTALL WHEEL STOP PER CCAUSD NO. 238.
40. CURB OPENING PER DETAIL T ON SHEET D-2.
41. DIRECTIONAL SIDEWALK RAMP PER DETAIL U ON SHEET D-2.

STORM DRAIN CONSTRUCTION NOTE

ALL STORM DRAIN INLETS ARE TO BE CONSTRUCTED PER THE ADOPTED USDCCA DRAWING NO. 421.

NOTE

PROPERTY OWNER IS RESPONSIBLE TO MAINTAIN THE BEST MANAGEMENT PRACTICES SUCH AS BUT NOT LIMITED TO THE REMOVAL OF ACCUMULATED SEDIMENT AND DEBRIS AND CARE OF THE VEGETATIOIN.

FLOOD CERTIFICATION

I CERTIFY THAT THIS GRADING PLAN IS IN CONFORMANCE WITH THE APPROVED TECHNICAL DRAINAGE STUDY #DS 4841 ON FILE AT CITY OF LAS VEGAS FOR THE SUBJECT PROJECT.

JERRY J. SLATER, P.E. 14167 — 11·1·17 — DATE

STORM WATER RUNOFF MANAGEMENT

(REQUIRED FOR ALL SITES GREATER THAN 1 ACRE (43,560 SQ.FT.))

1. THE OWNER, SITE DEVELOPER, CONTRACTOR AND/OR THEIR AUTHORIZED AGENTS SHALL EACH DAY REMOVE ALL SEDIMENT ,MUD, CONSTRUCTION DEBRIS, OR OTHER POTENTIAL POLLUTANTS THAT MAY HAVE BEEN DISCHARGED TO, OR ACCUMULATE IN, THE PUBLIC RIGHTS OF WAYS OF CLARK COUNTY AS A RESULT OF CONSTRUCTION ACTIVITIES ASSOCIATED WITH THIS SITE DEVELOPMENT OR CONSTRUCTION PROJECT. SUCH MATERIALS SHALL BE PREVENTED FROM ENTERING THE STORM SEWER SYSTEM.
2. ADDITIONAL CONSTRUCTION SITE DISCHARGE BEST MANAGEMENT PRACTICES MAY BE REQUIRED OF THE OWNER AND HIS OR HER AGENTS DUE TO UNFORESEEN EROSION PROBLEMS OR IF THE SUBMITTED PLAN DOES NOT MEET THE PERFORMANCE STANDARDS SPECIFIED IN TITLE 24.40 AND THE LAS VEGAS VALLEY CONSTRUCTION SITE BEST MANAGEMENT PRACTICES MANUAL.
3. TEMPORARY OR PERMANENT STABILIZATION PRACTICES WILL BE INSTALLED ON DISTURBED AREAS AS SOON AS PRACTICABLE AND NO LATER THAN 14 DAYS AFTER THE CONSTRUCTION ACTIVITY IN THAT PORTION OF THE SITE HAS TEMPORARILY OR PERMANENTLY CEASED. SOME EXCEPTIONS MAY APPLY; REFER TO NEVADA STORMWATER GENERAL PERMIT FOR CONSTRUCTION ACTIVITY NVR100000, SECTION III.A.5.
4. AT A MINIMUM, THE CONTRACTOR OR HIS AGENT SHALL INSPECT ALL DISTURBED AREAS, AREAS USED FOR STORAGE OF MATERIALS AND EQUIPMENT THAT ARE EXPOSED TO PRECIPITATION, VEHICLE ENTRANCE AND EXIT LOCATIONS AND ALL BMPS WEEKLY, AND WITHIN 24 HOURS AFTER ANY ACTUAL RAIN EVENT OF 0.5 INCHES OR MORE. THE CONTRACTOR OR HIS AGENT SHALL UPDATE OR MODIFY THE STORMWATER POLLUTION PREVENTION PLAN AS NECESSARY. SOME EXCEPTIONS TO WEEKLY INSPECTIONS MAY APPLY, SUCH AS SUSPENSION OF LAND DISTURBANCE ACTIVITIES. REFER TO NEVADA STORMWATER GENERAL PERMIT FOR CONSTRUCTION ACTIVITY NVR100000, SECTION III.A.12.
5. ACCUMULATED SEDIMENT IN BMPS SHALL BE REMOVED WITHIN SEVEN DAYS AFTER A STORMWATER RUNOFF EVENT OR PRIOR TO THE NEXT ANTICIPATED STORM EVENT, WHICHEVER IS EARLIER. SEDIMENT MUST BE REMOVED WHEN BMP DESIGN CAPACITY HAS BEEN REDUCED BY 50 PERCENT OR MORE.

BONDABLE DRAINAGE QUANTITIES

1.	48" TYPE I STORM DRAIN MANHOLE	EA	2
2.	48" TYPE II STORM DRAIN MANHOLE	EA	4
3.	12" NDS SQUARE DRAIN (OR APPROVED EQUAL) PER DETAILS ON SHEET D-3	EA	2
4.	JENSON PRECAST DRAIN INLET PER DETAILS ON SHEET D-3	EA	2
5.	12" PVC STORM DRAIN	EA	131
6.	18" PVC STORM DRAIN	LF	504
7.	24" PVC STORM DRAIN	LF	21
8.	36" RCP CLASS IV STORM DRAIN	LF	381
9.	RIPRAP D50=8", THK=16"	SF	9650
10.	SIDEWALK UNDER DRAIN PER CCAUSD #236	EA	1
11.	60" TYPE III STORM DRAIN MANHOLE	EA	1
12.	6" WIDE ZURN SIDEWALK TRENCH DRAIN	EA	1
13.	2-FT WIDE CONCRETE FLUME	LF	12

FEMA FLOOD ZONE DESIGNATION

THE PROJECT SITE IS LOCATED WITHIN A FEMA DESIGNATED ZONE 'X' (AREA OUTSIDE THE 500 YEAR FLOODPLAIN), ON THE FLOOD INSURANCE RATE MAP (FIRM) PANEL: 32003C1750E, DATED SEPTEMBER 27, 2002.

NOTES

1. THE CONTRACTOR SHALL VERIFY ALL CONDITIONS OF EXISTING STRUCTURES INCLUDING LOCATION, ELEVATION, DIMENSIONS AND REPORT ALL DISCREPANCIES TO THE ENGINEER PRIOR TO CONSTRUCTION.
2. ALL IMPROVEMENTS TO BE PROTECTED FROM EROSION DURING CONSTRUCTION THROUGH THE USE OF A STORM WATER POLLUTION PREVENTION PLAN (SWPPP).
3. MAXIMUM/MINIMUM SLOPES AND MINIMUM STREET SECTIONS NOT TO EXCEED THAT SHOWN ON THE GEOTECH REPORT.
4. SEE SHEET C-2 FOR LEGEND AND DETAIL SHEET D-1 FOR STREET SECTIONS AND DETAILS.
5. ADD 2800 TO PLAN GRADES WITH THE EXCEPTION OF FINISHED FLOORS AND EXISTING AND PROPOSED CONTOURS.
6. ALL PRIVATE STORM DRAINS ARE PUBLIC DRAINAGE EASEMENTS TO BE PRIVATELY MAINTAINED BY HOA.
7. CONTRACTOR TO VERIFY ALL HANDICAP ACCESSIBLE ROUTES AND PARKING STALLS ARE IN CONFORMANCE WITH A.D.A ACCESSIBILITY GUIDELINES AND DO NOT EXCEED MAXIMUM SLOPES IN ANY DIRECTION PRIOR TO CONSTRUCTION. CONTRACTOR TO NOTIFY ENGINEER OF ANY DISCREPANCIES.
8. CONSTRUCT A.D.A. ROUTE, HAND RAILS, PARKING, SIGNAGE & RAMPS TO COMPLY WITH ICC/ANSI A117.1-2003
9. ALL ON-SITE STORM DRAINS AND THE ASSOCIATED FACILITIES ARE PRIVATELY OWNED AND MAINTAINED.
10. ANY FUTURE DEVELOPMENT WILL REQUIRE A TECHNICAL DRAINAGE STUDY UPDATE.
11. CONCRETE SIDEWALKS SHALL NOT EXCEED 5% IN A LONGITUDINAL DIRECTION OR 2% IN A CROSS SLOPE DIRECTION. ANY CONCRETE SIDEWALK LANDING SHALL NOT EXCEED 2% IN ANY DIRECTION AND SHALL BE A MINIMUM OF 5 FEET BY 5 FEET.

BENCHMARK

USDA BRASS CAP ON AN IRON PIPE, 140' SOUTHWEST OF TELEPHONE POLE #26994T, SOUTHWEST CORNER OF THE U.S. 95/KYLE CANYON TURNOFF.

ELEVATION = 2817.62 FEET, 858.813 METERS
N.A.V.D. 88
PER THE CLARK COUNTY VERTICAL CONTROL LAST REVISED 2003

BASIS OF BEARINGS

THE BASIS OF BEARING IS SOUTH 00°22'12" WEST, BEING THE BEARING OF THE WEST LINE OF THE NORTHWEST QUARTER (NW1/4) OF SECTION 6, TOWNSHIP 19 SOUTH, RANGE 60 EAST, M.D.M., CITY OF LAS VEGAS, CLARK COUNTY, NEAVAD, AS SHOWN BY MAP THEREOF IN FILE 151, PAGE 14 OF SURVEYS IN THE CLARK COUNTY RECORDER'S OFFICE, NEVADA.

DISCLAIMER NOTE

1. EXISTING UTILITY LOCATIONS SHOWN HEREON ARE APPROXIMATE ONLY. IT SHALL BE THE CONTRACTOR'S RESPONSIBILITY TO DETERMINE THE EXACT VERTICAL AND HORIZONTAL LOCATION OF ALL EXISTING UNDERGROUND UTILITIES PRIOR TO COMMENCING CONSTRUCTION. NO REPRESENTATION IS MADE THAT ALL EXISTING UTILITIES ARE SHOWN HEREON. THE ENGINEER ASSUMES NO RESPONSIBILITY FOR UTILITIES NOT SHOWN IN THEIR PROPER LOCATION.
2. FOR ROADWAY WIDENING AND HALF STREET IMPROVEMENTS THE CONTRACTOR SHALL VERIFY CROSS SLOPES FROM EXISTING PAVEMENT SAWCUT LINE TO PROPOSED EDGE OF PAVEMENT OR PROJECTED LIP OF CURB PRIOR TO SUBGRADE PREPARATION AND CONSTRUCTION OF PROPOSED CURB LINE. IF MINIMUM OR MAXIMUM CROSS SLOPES DO NOT MEET AGENCY STANDARDS THE CONTRACTOR SHALL NOTIFY THE ENGINEER PRIOR TO THE PLACEMENT OF TYPE II AND CURB.

GRADING QUANTITIES

EARTHWORK QUANTITIES (RAW):
-CUT = 30,066 CUBIC YARDS.
-FILL = 43,578 CUBIC YARDS

A. THE ABOVE QUANTITIES DO NOT REFLECT LOSSES DUE TO SUBSIDENCE OR SHRINKAGE.
B. THE ABOVE QUANTITIES DO REFLECT USING NATIVE MATERIAL IN LIEU OF TYPE I GRAVEL BASE MATERIAL FOR STREET SECTIONS.
C. THE ABOVE QUANTITIES DO NOT REFLECT ANY EARTHWORK WHICH MAY BE REQUIRED BY THE ENGINEER TO CONSTRUCT ADDITIONAL PROTECTIVE DITCHES OR BERMS NOT SHOWN ON THESE DRAWINGS.
D. ALL ONSITE GRADING SHALL COMPLY WITH THE CONDITIONS SET FORTH IN THE GEOTECHNICAL REPORT REFERENCED ON SHEET C-2.

FAST — Call before you UnderGround 1-702-432-5300 FREEWAY & ARTERIAL SYSTEM OF TRANSPORTATION (F.A.S.T)

AVOID HITTING OVERHEAD POWER LINES. IT'S COSTLY. CALL BEFORE YOU DO OVERHEAD 1-702-227-2929

Call before you Dig. AVOID CUTTING UNDERGROUND UTILITY LINES. IT'S COSTLY. Call 811 OR 1-800-227-2600

SLATER HANIFAN GROUP
CONSULTING ENGINEERS & PLANNERS
5740 S. ARVILLE STREET #216, LAS VEGAS, NV 89118
PHONE (702) 284-5300 FAX (702) 284-5399

NO.	DESCRIPTION	DATE	BY	APP. DATE	APP.

CITY OF LAS VEGAS

ETHOS THREE ARCHITECTURE
SKYE CANYON SOMERSET ACADEMY
GRADING PLAN II

S12 T19S R59E

DATE: 11/01/17
DRAFTER: DNP
DESIGNER: BCC
CHECKED: STS
PROJECT NO. ETA1601-000

JERRY J. SLATER, Exp. 06/30/2018, CIVIL, No. 14167 — PROFESSIONAL ENGINEER — STATE OF NEVADA — 11·1·17

G-2
SHEET 6 OF 15
HANSEN NO. 68370
DWG NO. 715-196

j:\eta1601-000 skye canyon academy\dwg\improv\eta1601-000grd.dwg 11/1/2017 3:37 PM Dominic Panaligan

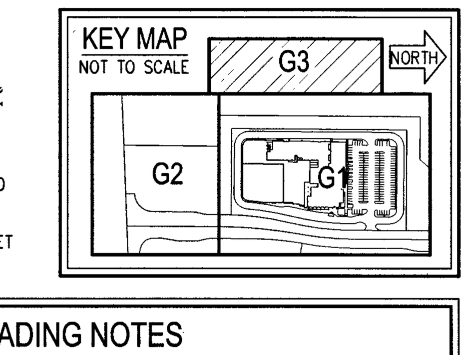

SCALE - 1"=30' FEET

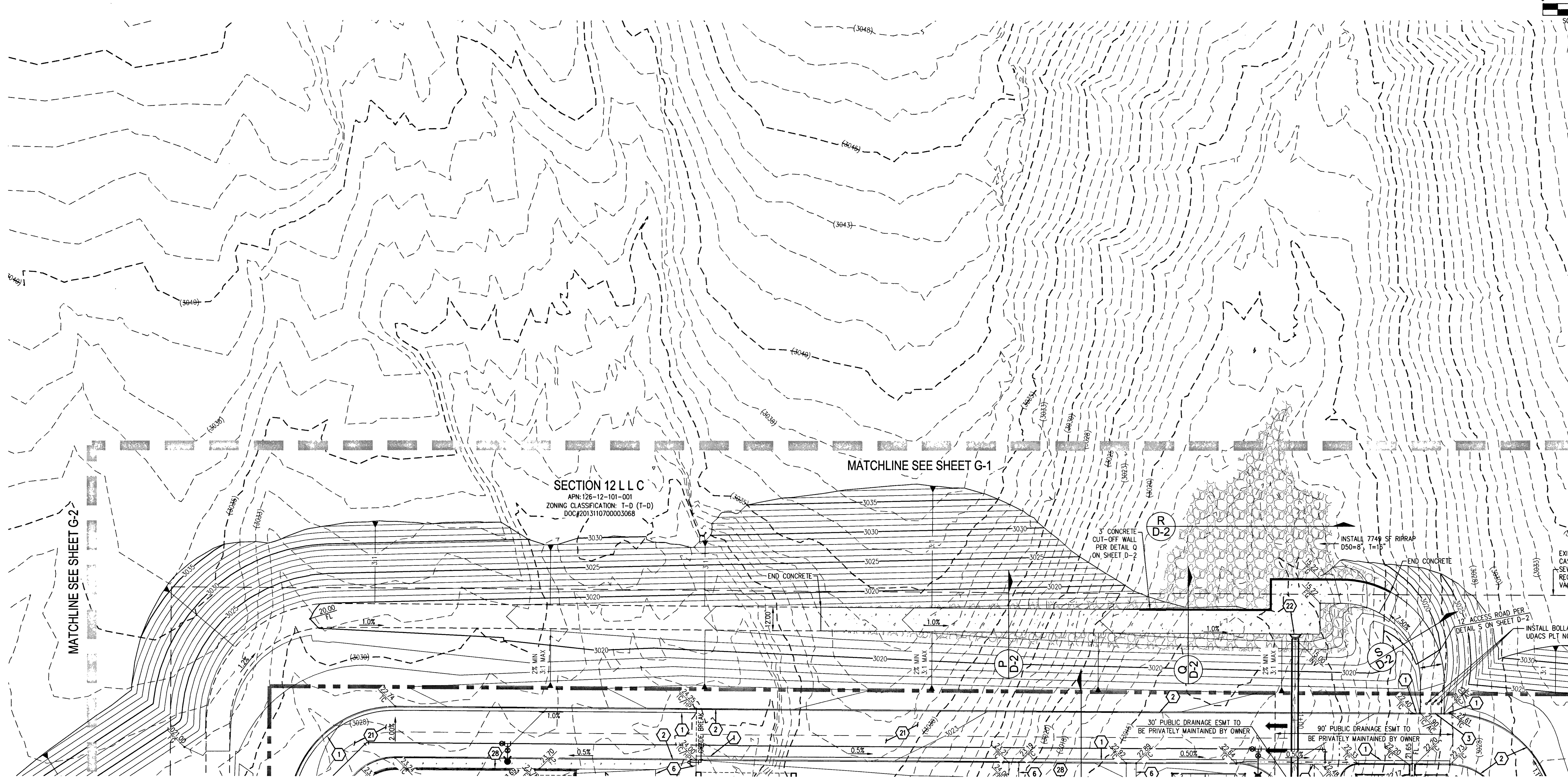

GRADING NOTES

1. "L" TYPE CURB PER CCAUSD DWG NO. 216.
2. "A" CURB PER DETAIL C ON SHEET D-2.
3. "DEPRESSED" CURB PER DETAIL D ON SHEET D-2.
4. CURB OPENING PER DETAIL E ON SHEET D-2.
5. AC PARKING AREA. SEE SOILS REPORT FOR SECTION.
6. 4" THICK CONCRETE SIDEWALK OVER 5" MIN TYPE II AGG. BASE. SEE LANDSCAPE PLAN FOR WIDTH AND FINISH.
7. INSTALL JENSEN PRECAST DRAIN INLET PER DETAILS ON SHEET DT-3 (GRATE SIZE PER PLAN) WITH APRON.
8. HANDICAPPED VAN ACCESSIBLE PARKING STALL IN ACCORDANCE WITH LVMC 19.08.110(2) WITH SIGNAGE PER LVMC 11.52.135.
9. 48" TYPE II STORM DRAIN MANHOLE PER CCAUSD NO. 401 & 405.
10. 36" RCP CLASS III SD, LENGTH PER PLAN.
11. CHILD PLAY AREA. SEE LANDSCAPE PLANS FOR CONSTRUCTION MATERIALS AND HORIZONTAL DIMENSIONS.
12. TURF FIELD. SEE LANDSCAPE PLANS FOR HORIZONTAL DIMENSIONS AND STRIPING DETAILS.
13. BASKETBALL COURT. SEE LANDSCAPE PLANS FOR HORIZONTAL DIMENSIONS AND STRIPING DETAILS.
14. TRASH ENCLOSURE. SEE ARCHITECTURAL PLANS FOR CONSTRUCTION MATERIALS AND DETAILS.
15. SIDEWALK RAMP WITH ARMOR TILE TRUNCATED DOMES OR EQUIVALENT PER CCAUSD NO. 235, CASE II & 235.1.
16. 6" WIDE ZURN TRENCH DRAIN (OR APPROVED EQUAL) PER DETAIL G ON SHEET D-2.
17. INSTALL PRECAST BUMPER BLOCKS PER CCAUSD NO. 238 OR EQUIVALENT (TYPICAL, WHERE SHOWN ON PLANS).
18. 2-FT WIDE VALLEY GUTTER PER DETAIL F ON SHEET D-2.
19. INSTALL 24" PVC STORM DRAIN.
20. 48" TYPE I STORM DRAIN MANHOLE PER CCAUSD NO. 401.
21. AC PAVEMENT. SEE SOILS REPORT FOR SECTION.
22. RCP END SECTION PER NDOT R-2.3.1. SEE SHEET D-3 FOR DETAIL.
23. ARMOR TILE TRUNCATED DOMES OR EQUIVALENT PER CCAUSD NO. 235, CASE II & 235.1.
24. CONCRETE PAD PER DETAIL K ON SHEET D-2.
25. REMOVE END SECTION AND 9 LF EX. 36" RCP SD.
26. CONSTRUCT SIDEWALK RAMPS WITH ARMOR TILE TRUNCATED DOMES PER DETAIL A ON SHEET D-2.
27. 6" WIDE CONCRETE CURB PER DETAIL L ON SHEET D-2.
28. 12" WIDE CONCRETE CURB PER DETAIL I ON SHEET D-2.
29. INSTALL 18" PVC STORM DRAIN.
30. 12" NDS SQUARE DRAIN (OR APPROVED EQUAL) PER DETAILS ON SHEET D-3.
31. TRANSITION CURB PER DETAIL N ON D-2.
32. INSTALL 12" PVC STORM DRAIN.
33. INSTALL SIDEWALK DRAIN PER CCAUSD #236.
34. CURB OPENING PER DETAIL M ON SHEET D-2.
35. 60" TYPE III STORM DRAIN MANHOLE PER CCAUSD NO. 401 & 405.
36. INSTALL PEDESTRIAN GATE PER ARCHITECT PLANS BY OTHERS.
37. INSTALL 2' WIDE CONCRETE FLUME PER DETAIL O ON SHEET D-2.
38. INSTALL TREATMENT SWALE: MIN 9" DEEP, 4:1 SIDE SLOPE, D50=3" (LANDSCAPE ROCK), AND LESS THAN OR EQUAL TO 1% SLOPE.
39. INSTALL WHEEL STOP PER CCAUSD NO. 238.
40. CURB OPENING PER DETAIL T ON SHEET D-2.
41. DIRECTIONAL SIDEWALK RAMP PER DETAIL U ON SHEET D-2.

STORM WATER RUNOFF MANAGEMENT

(REQUIRED FOR ALL SITES GREATER THAN 1 ACRE (43,560 SQ.FT.))

1. THE OWNER, SITE DEVELOPER, CONTRACTOR AND/OR THEIR AUTHORIZED AGENTS SHALL EACH DAY REMOVE ALL SEDIMENT ,MUD, CONSTRUCTION DEBRIS, OR OTHER POTENTIAL POLLUTANTS THAT MAY HAVE BEEN DISCHARGED TO, OR ACCUMULATE IN, THE PUBLIC RIGHTS OF WAYS OF CLARK COUNTY AS A RESULT OF CONSTRUCTION ACTIVITIES ASSOCIATED WITH THIS SITE DEVELOPMENT OR CONSTRUCTION PROJECT. SUCH MATERIALS SHALL BE PREVENTED FROM ENTERING THE STORM SEWER SYSTEM.
2. ADDITIONAL CONSTRUCTION SITE DISCHARGE BEST MANAGEMENT PRACTICES MAY BE REQUIRED OF THE OWNER AND HIS OR HER AGENTS DUE TO UNFORESEEN EROSION PROBLEMS OR IF THE SUBMITTED PLAN DOES NOT MEET THE PERFORMANCE STANDARDS SPECIFIED IN TITLE 24.40 AND THE LAS VEGAS VALLEY CONSTRUCTION SITE BEST MANAGEMENT PRACTICES MANUAL.
3. TEMPORARY OR PERMANENT STABILIZATION PRACTICES WILL BE INSTALLED ON DISTURBED AREAS AS SOON AS PRACTICABLE AND NO LATER THAN 14 DAYS AFTER THE CONSTRUCTION ACTIVITY IN THAT PORTION OF THE SITE HAS TEMPORARILY OR PERMANENTLY CEASED. SOME EXCEPTIONS MAY APPLY; REFER TO NEVADA STORMWATER GENERAL PERMIT FOR CONSTRUCTION ACTIVITY NVR100000, SECTION III.A.5.
4. AT A MINIMUM, THE CONTRACTOR OR HIS AGENT SHALL INSPECT ALL DISTURBED AREAS, AREAS USED FOR STORAGE OF MATERIALS AND EQUIPMENT THAT ARE EXPOSED TO PRECIPITATION, VEHICLE ENTRANCE AND EXIT LOCATIONS AND ALL BMPS WEEKLY, AND WITHIN 24 HOURS AFTER ANY ACTUAL RAIN EVENT OF 0.5 INCHES OR MORE. THE CONTRACTOR OR HIS AGENT SHALL UPDATE OR MODIFY THE STORMWATER POLLUTION PREVENTION PLAN AS NECESSARY. SOME EXCEPTIONS TO WEEKLY INSPECTIONS MAY APPLY, SUCH AS SUSPENSION OF LAND DISTURBANCE ACTIVITIES. REFER TO NEVADA STORMWATER GENERAL PERMIT FOR CONSTRUCTION ACTIVITY NVR100000, SECTION III.A.12.
5. ACCUMULATED SEDIMENT IN BMPS SHALL BE REMOVED WITHIN SEVEN DAYS AFTER A STORMWATER RUNOFF EVENT OR PRIOR TO THE NEXT ANTICIPATED STORM EVENT, WHICHEVER IS EARLIER. SEDIMENT MUST BE REMOVED WHEN BMP DESIGN CAPACITY HAS BEEN REDUCED BY 50 PERCENT OR MORE.

FLOOD CERTIFICATION

I CERTIFY THAT THIS GRADING PLAN IS IN CONFORMANCE WITH THE APPROVED TECHNICAL DRAINAGE STUDY #DS 4841 ON FILE AT CITY OF LAS VEGAS FOR THE SUBJECT PROJECT.

JERRY J. SLATER, P.E. 14167 — 11.1.17 — DATE

BONDABLE DRAINAGE QUANTITIES

1.	48" TYPE I STORM DRAIN MANHOLE	EA	2
2.	48" TYPE II STORM DRAIN MANHOLE	EA	4
3.	12" NDS SQUARE DRAIN (OR APPROVED EQUAL) PER DETAILS ON SHEET D-3	EA	2
4.	JENSON PRECAST DRAIN INLET PER DETAILS ON SHEET D-3	EA	2
5.	12" PVC STORM DRAIN	EA	131
6.	18" PVC STORM DRAIN	LF	504
7.	24" PVC STORM DRAIN	LF	21
8.	36" RCP CLASS IV STORM DRAIN	LF	381
9.	RIPRAP D50=8", THK=16"	SF	9650
10.	SIDEWALK UNDER DRAIN PER CCAUSD #236	EA	1
11.	60" TYPE III STORM DRAIN MANHOLE	EA	1
12.	6" WIDE ZURN SIDEWALK TRENCH DRAIN	EA	1
13.	2-FT WIDE CONCRETE FLUME	LF	12

STORM DRAIN CONSTRUCTION NOTE

ALL STORM DRAIN INLETS ARE TO BE CONSTRUCTED PER THE ADOPTED USDCCA DRAWING NO. 421.

NOTE

PROPERTY OWNER IS RESPONSIBLE TO MAINTAIN THE BEST MANAGEMENT PRACTICES SUCH AS BUT NOT LIMITED TO THE REMOVAL OF ACCUMULATED SEDIMENT AND DEBRIS AND CARE OF THE VEGETATIOIN.

FEMA FLOOD ZONE DESIGNATION

THE PROJECT SITE IS LOCATED WITHIN A FEMA DESIGNATED ZONE 'X' (AREA OUTSIDE THE 500 YEAR FLOODPLAIN), ON THE FLOOD INSURANCE RATE MAP (FIRM)
PANEL: 32003C1750E, DATED SEPTEMBER 27, 2002.

NOTES

1. THE CONTRACTOR SHALL VERIFY ALL CONDITIONS OF EXISTING STRUCTURES INCLUDING LOCATION, ELEVATION, DIMENSIONS AND REPORT ALL DISCREPANCIES TO THE ENGINEER PRIOR TO CONSTRUCTION.
2. ALL IMPROVEMENTS TO BE PROTECTED FROM EROSION DURING CONSTRUCTION THROUGH THE USE OF A STORM WATER POLLUTION PREVENTION PLAN (SWPPP).
3. MAXIMUM/MINIMUM SLOPES AND MINIMUM STREET SECTIONS NOT TO EXCEED THAT SHOWN ON THE GEOTECH REPORT.
4. SEE SHEET C-2 FOR LEGEND AND DETAIL SHEET D-1 FOR STREET SECTIONS AND DETAILS.
5. ADD 2800 TO PLAN GRADES WITH THE EXCEPTION OF FINISHED FLOORS AND EXISTING AND PROPOSED CONTOURS.
6. ALL PRIVATE STORM DRAINS ARE PUBLIC DRAINAGE EASEMENTS TO BE PRIVATELY MAINTAINED BY HOA.
7. CONTRACTOR TO VERIFY ALL HANDICAP ACCESSIBLE ROUTES AND PARKING STALLS ARE IN CONFORMANCE WITH A.D.A ACCESSIBILITY GUIDELINES AND DO NOT EXCEED MAXIMUM SLOPES IN ANY DIRECTION PRIOR TO CONSTRUCTION. CONTRACTOR TO NOTIFY ENGINEER OF ANY DISCREPANCIES.
8. CONSTRUCT A.D.A. ROUTE, HAND RAILS, PARKING, SIGNAGE & RAMPS TO COMPLY WITH ICC/ANSI A117.1-2003
9. ALL ON-SITE STORM DRAINS AND THE ASSOCIATED FACILITIES ARE PRIVATELY OWNED AND MAINTAINED.
10. ANY FUTURE DEVELOPMENT WILL REQUIRE A TECHNICAL DRAINAGE STUDY UPDATE.
11. CONCRETE SIDEWALKS SHALL NOT EXCEED 5% IN A LONGITUDINAL DIRECTION OR 2% IN A CROSS SLOPE DIRECTION. ANY CONCRETE SIDEWALK LANDING SHALL NOT EXCEED 2% IN ANY DIRECTION AND SHALL BE A MINIMUM OF 5 FEET BY 5 FEET.

BENCHMARK

USDA BRASS CAP ON AN IRON PIPE, 140' SOUTHWEST OF TELEPHONE POLE #26994T, SOUTHWEST CORNER OF THE U.S. 95/KYLE CANYON TURNOFF.

ELEVATION = 2817.62 FEET, 858.813 METERS
N.A.V.D. 88
PER THE CLARK COUNTY VERTICAL CONTROL LAST REVISED 2003

BASIS OF BEARINGS

THE BASIS OF BEARING IS SOUTH 00°22'12" WEST, BEING THE BEARING OF THE WEST LINE OF THE NORTHWEST QUARTER (NW1/4) OF SECTION 6, TOWNSHIP 19 SOUTH, RANGE 60 EAST, M.D.M., CITY OF LAS VEGAS, CLARK COUNTY, NEAVAD, AS SHOWN BY MAP THEREOF IN FILE 151, PAGE 14 OF SURVEYS IN THE CLARK COUNTY RECORDER'S OFFICE, NEVADA.

DISCLAIMER NOTE

1. EXISTING UTILITY LOCATIONS SHOWN HEREON ARE APPROXIMATE ONLY. IT SHALL BE THE CONTRACTOR'S RESPONSIBILITY TO DETERMINE THE EXACT VERTICAL AND HORIZONTAL LOCATION OF ALL EXISTING UNDERGROUND UTILITIES PRIOR TO COMMENCING CONSTRUCTION. NO REPRESENTATION IS MADE THAT ALL EXISTING UTILITIES ARE SHOWN HEREON. THE ENGINEER ASSUMES NO RESPONSIBILITY FOR UTILITIES NOT SHOWN IN THEIR PROPER LOCATION.
2. FOR ROADWAY WIDENING AND HALF STREET IMPROVEMENTS THE CONTRACTOR SHALL VERIFY CROSS SLOPES FROM EXISTING PAVEMENT SAWCUT LINE TO PROPOSED EDGE OF PAVEMENT OR PROJECTED LIP OF CURB PRIOR TO SUBGRADE PREPARATION AND CONSTRUCTION OF PROPOSED CURB LINE. IF MINIMUM OR MAXIMUM CROSS SLOPES DO NOT MEET AGENCY STANDARDS THE CONTRACTOR SHALL NOTIFY THE ENGINEER PRIOR TO THE PLACEMENT OF TYPE II AND CURB.

GRADING QUANTITIES

EARTHWORK QUANTITIES (RAW):
-CUT = 30,066 CUBIC YARDS.
-FILL = 43,578 CUBIC YARDS

A. THE ABOVE QUANTITIES DO NOT REFLECT LOSSES DUE TO SUBSIDENCE OR SHRINKAGE.
B. THE ABOVE QUANTITIES DO REFLECT USING NATIVE MATERIAL IN LIEU OF TYPE I GRAVEL BASE MATERIAL FOR STREET SECTIONS.
C. THE ABOVE QUANTITIES DO NOT REFLECT ANY EARTHWORK WHICH MAY BE REQUIRED BY THE ENGINEER TO CONSTRUCT ADDITIONAL PROTECTIVE DITCHES OR BERMS NOT SHOWN ON THESE DRAWINGS.
D. ALL ONSITE GRADING SHALL COMPLY WITH THE CONDITIONS SET FORTH IN THE GEOTECHNICAL REPORT REFERENCED ON SHEET C-2.

FAST
Call before you UnderGround
1-702-432-5300
FREEWAY & ARTERIAL SYSTEM OF TRANSPORTATION (F.A.S.T)

AVOID HITTING OVERHEAD POWER LINES. IT'S COSTLY.
CALL BEFORE YOU DO OVERHEAD
1-702-227-2929

Call before you Dig
AVOID CUTTING UNDERGROUND UTILITY LINES. IT'S COSTLY.
Call 811
OR
1-800-227-2600

SLATER HANIFAN GROUP
CONSULTING ENGINEERS & PLANNERS
5740 S. ARVILLE STREET #216, LAS VEGAS, NV 89118
PHONE (702) 284-5300 FAX (702) 284-5399

NO.	DESCRIPTION	DATE	BY	APP. DATE	APP.

CITY OF LAS VEGAS

ETHOS THREE ARCHITECTURE
SKYE CANYON SOMERSET ACADEMY
GRADING PLAN III

S12 T19S R59E

DATE: 11/01/17
DRAFTER: DNP
DESIGNER: BCC
CHECKED: STS
PROJECT NO. **ETA1601-000**

PROFESSIONAL ENGINEER – STATE OF NEVADA – JERRY J. SLATER – Exp. 06/30/2018 – CIVIL – No. 14167 – 11.1.17

G-3

HANSEN NO. 68370
DWG NO. 715-196

j:\eta1601-000 skye canyon academy\dwg\improv\eta1601-000grd.dwg 11/1/2017 3:37 PM Dominic Panaligan

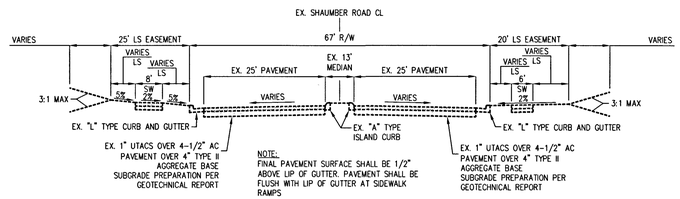

A. EXISTING STREET SECTION (PUBLIC)
NOT TO SCALE
SHAUMBER ROAD

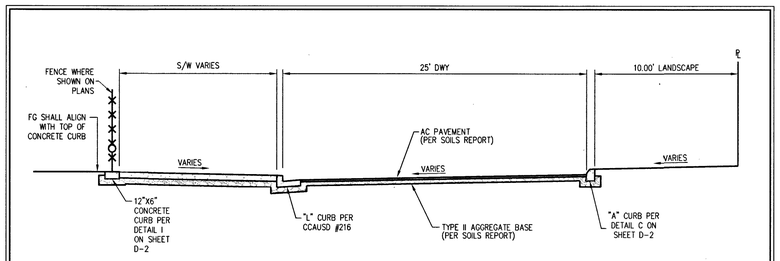

F. SECTION DETAIL
NOT TO SCALE

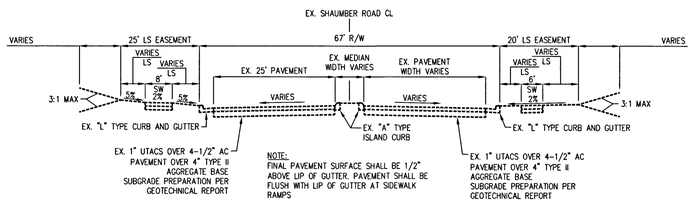

B. EXISTING STREET SECTION (PUBLIC)
NOT TO SCALE
SHAUMBER ROAD

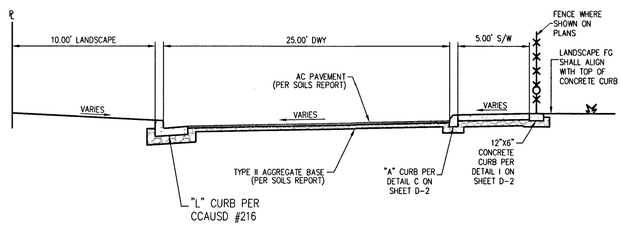

C. SECTION DETAIL
NOT TO SCALE

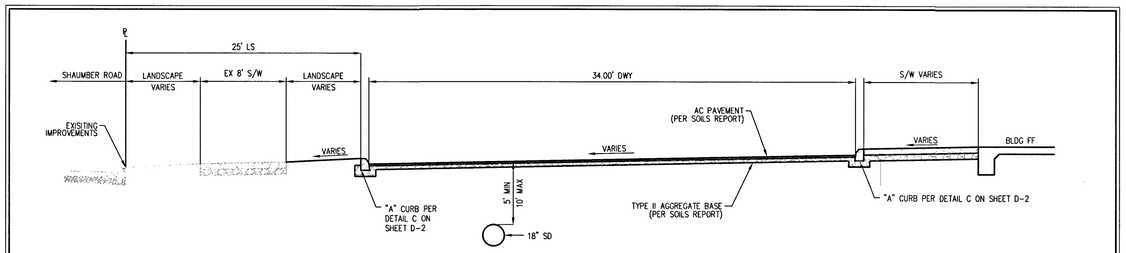

D. PERIMETER STREET SECTION (PUBLIC)
NOT TO SCALE

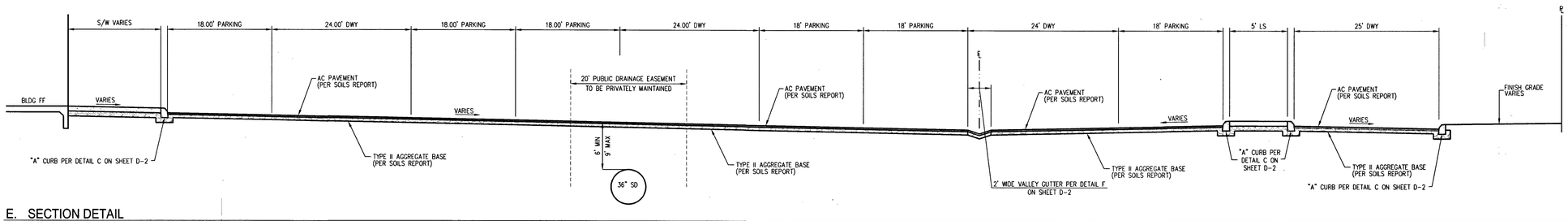

E. SECTION DETAIL
NOT TO SCALE

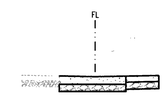

AVOID OVERHEAD POWER LINE CONTACT. IT'S COSTLY.
CALL BEFORE YOU OVERHEAD
1-702-227-2929

Call before you Dig
Avoid cutting underground utility lines. It's costly.
Call 811
OR
1-800-227-2600
AND
CLARK COUNTY TRAFFIC OPERATIONS
1-702-455-6000

AVOID HITTING UNDERGROUND TRAFFIC SIGNAL SYSTEMS AND STREET LIGHT SYSTEM CONDUITS. IT'S COSTLY.
Call before you UnderGround
1-702-455-6000
CLARK COUNTY TRAFFIC OPERATIONS
AND
1-702-432-5300
FREEWAY & ARTERIAL SYSTEM OF TRANSPORTATION (F.A.S.T.)

SLATER HANIFAN GROUP
CONSULTING ENGINEERS & PLANNERS
5740 S. ARVILLE STREET #216, LAS VEGAS, NV 89118
PHONE (702) 284-5300 FAX (702) 284-5399

NO.	DESCRIPTION	DATE	BY	APP. DATE	APP.

CITY OF LAS VEGAS

ETHOS THREE ARCHITECTURE

SKYE CANYON SOMERSET ACADEMY

DETAIL SHEET

S12 T19S R59E

DATE: 11/1/17
DRAFTER: DNP
DESIGNER: BCC
CHECKED: STS
PROJECT NO. ETA1601-000

PROFESSIONAL ENGINEER - STATE OF NEVADA
JERRY SLATER
Exp. 06/30/2018
CIVIL
No. 14167
7.1.17

D-1
SHEET 8 OF 15

HANSEN NO. 68370
DWG NO. 715-196

J:\eta1601-000 skye canyon academy\dwg\temprox\eta1601-000dtl.dwg 11/1/2017 3:35 PM Dominic Pandian

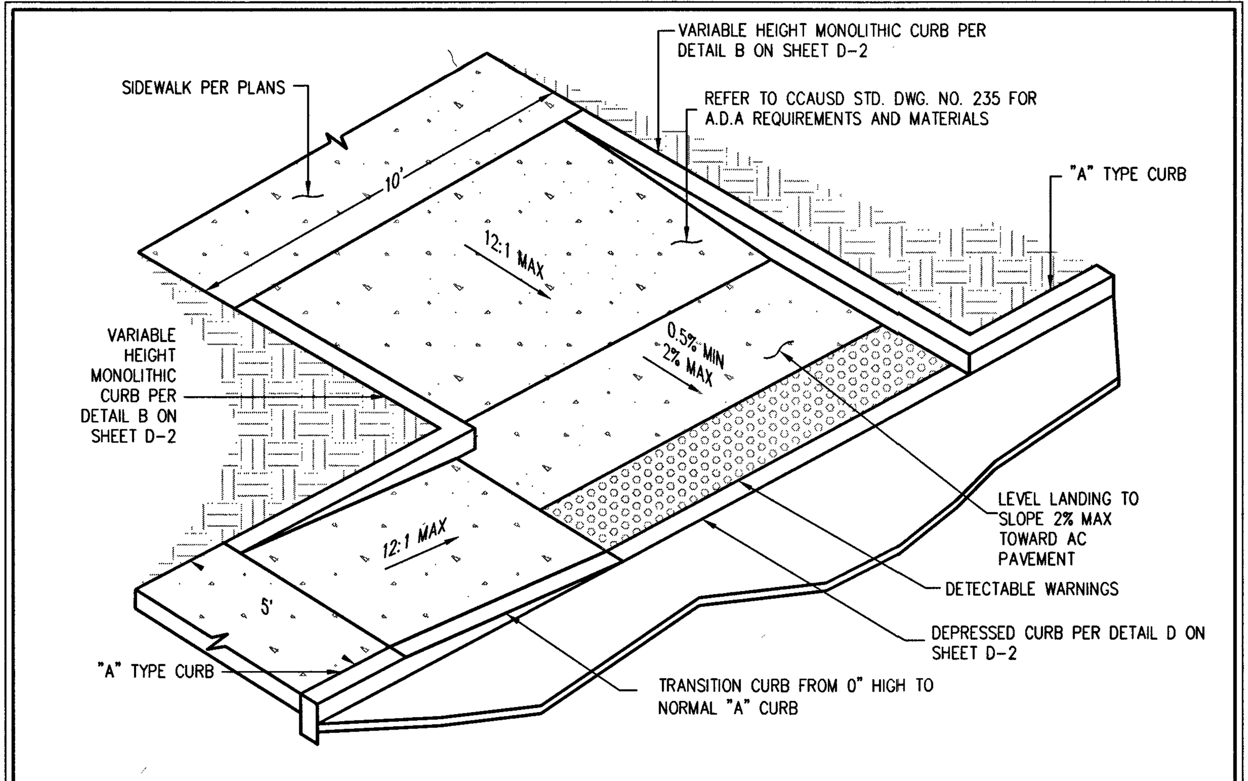

NOTE
THE DETAILS ON THIS SHEET ARE MINIMUM ADA STANDARDS THAT MUST BE COMPLIED WITH. ALL RAMPS, SURFACES, DETECTABLE WARNINGS & LANDINGS MUST COMPLY WITH ICC/ANSI A117.1-2003. THE CONTRACTOR SHALL ADVISE THE ENGINEER OF FIELD CONDITIONS THAT DO NOT COMPLY WITH THE MINIMUM ADA STANDARDS SHOWN HEREON.

A. SIDEWALK RAMP DETAIL
NOT TO SCALE

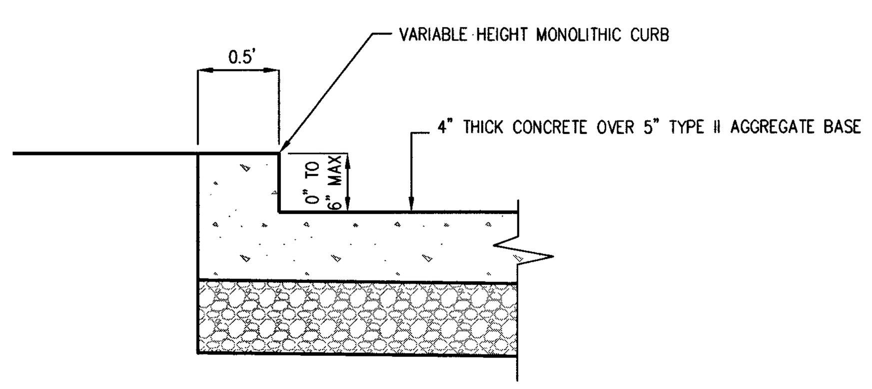

B. VARIABLE HEIGHT MONOLITHIC CURB FOR SIDEWALK RAMPS
NOT TO SCALE

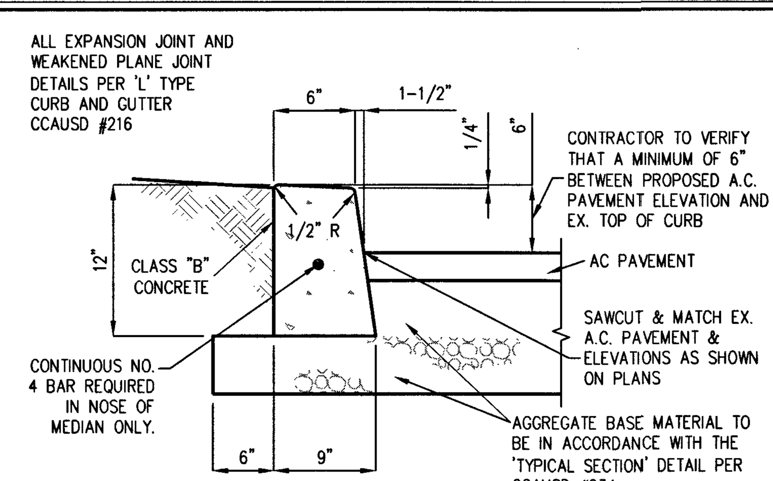

C. "A" TYPE CURB
NOT TO SCALE

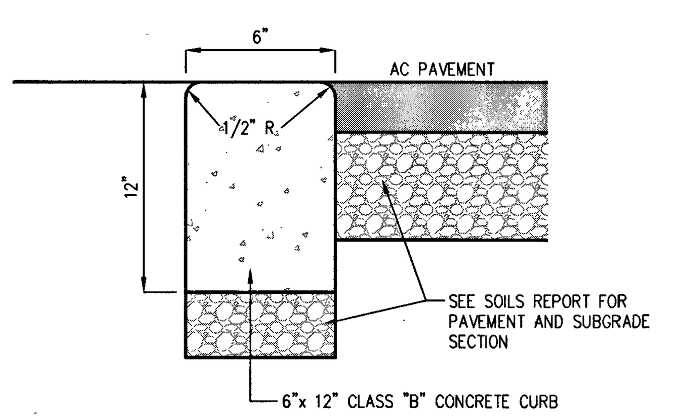

D. DEPRESSED CURB
NOT TO SCALE

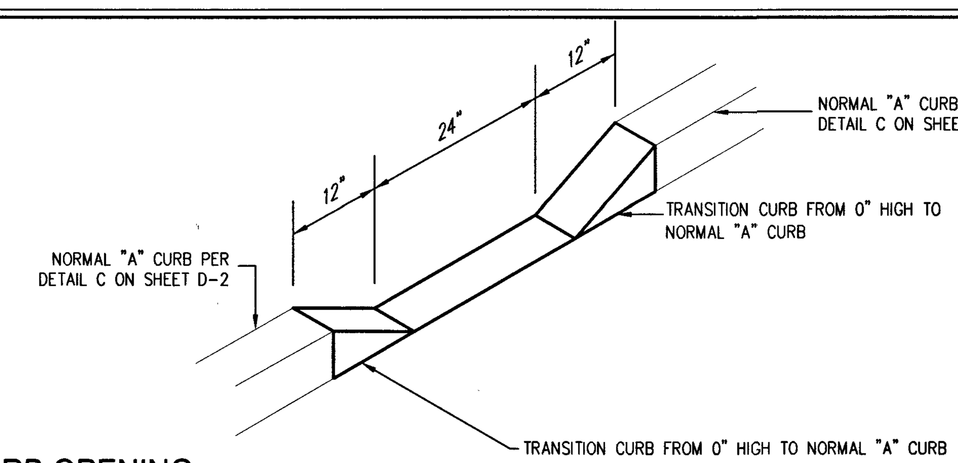

E. CURB OPENING
NOT TO SCALE

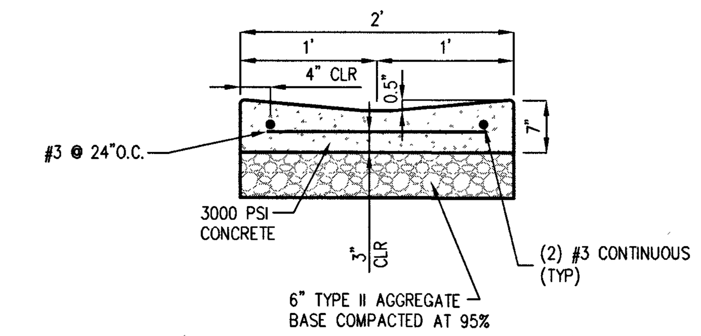

CONSTRUCT ½" EXPANSION JOINTS AT ALL COLD JOINTS AND ANGLE POINTS WEAKENED PLANE JOINT @ 15' MIN INTERVALS. SEE USD #234 FOR JOINT DETAILS.

F. VALLEY GUTTER
NOT TO SCALE

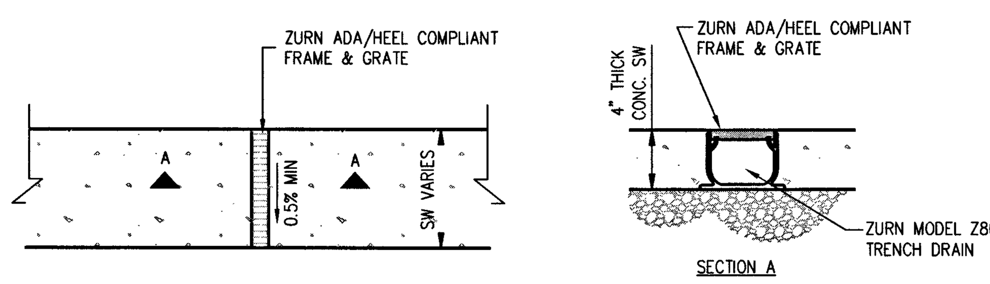

G. ZURN TRENCH DRAIN
NOT TO SCALE

NOTE
THE DETAILS ON THIS SHEET ARE MINIMUM ADA STANDARDS THAT MUST BE COMPLIED WITH. ALL RAMPS, SURFACES, DETECTABLE WARNINGS & LANDINGS MUST COMPLY WITH ICC/ANSI A117.1-2003. THE CONTRACTOR SHALL ADVISE THE ENGINEER OF FIELD CONDITIONS THAT DO NOT COMPLY WITH THE MINIMUM ADA STANDARDS SHOWN HEREON.

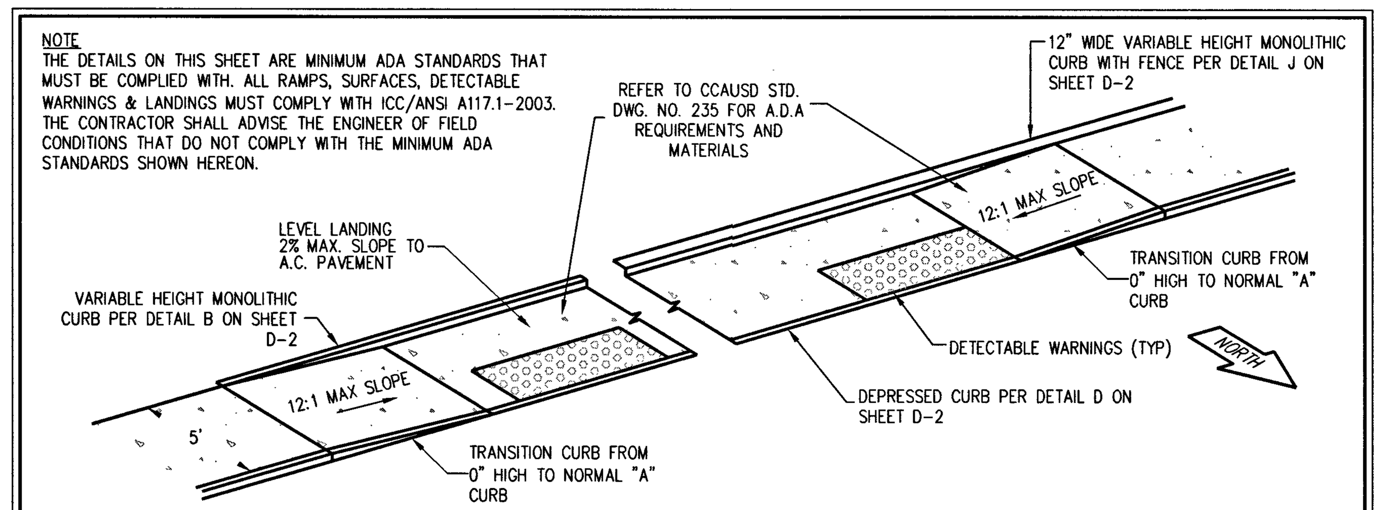

H. SIDEWALK DETAIL
NOT TO SCALE

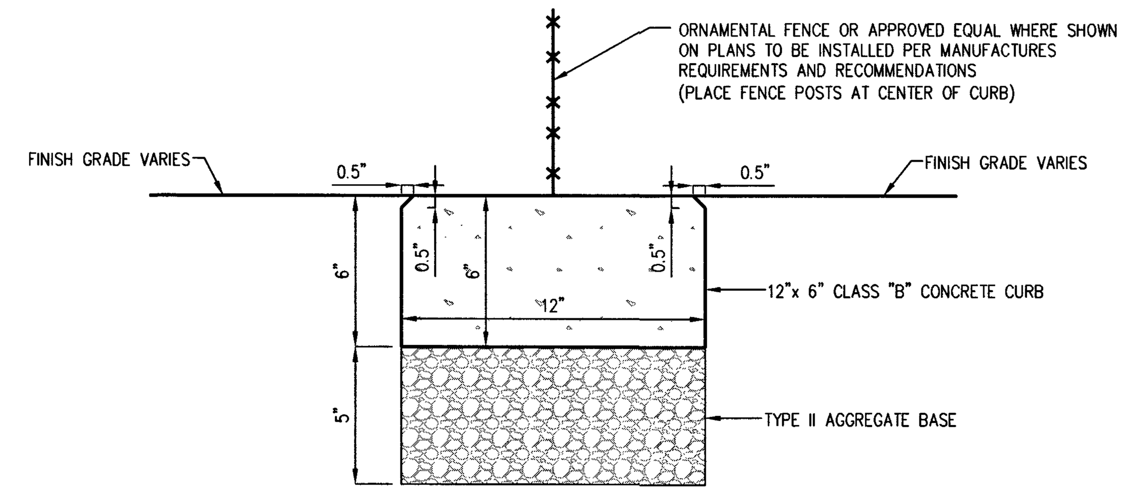

I. 12" WIDE CONCRETE CURB WITH FENCE
NOT TO SCALE

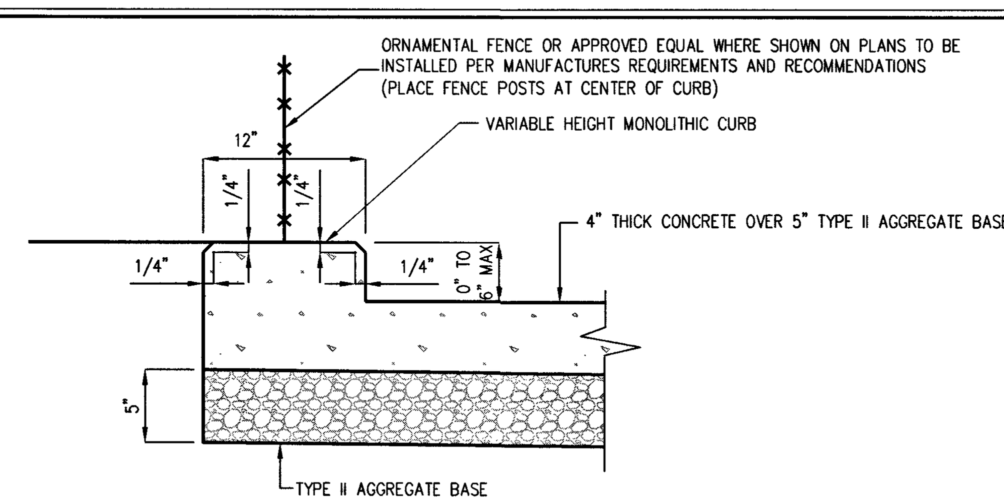

J. 12" WIDE VARIABLE HEIGHT MONOLITHIC CURB FOR SIDEWALK RAMPS
NOT TO SCALE

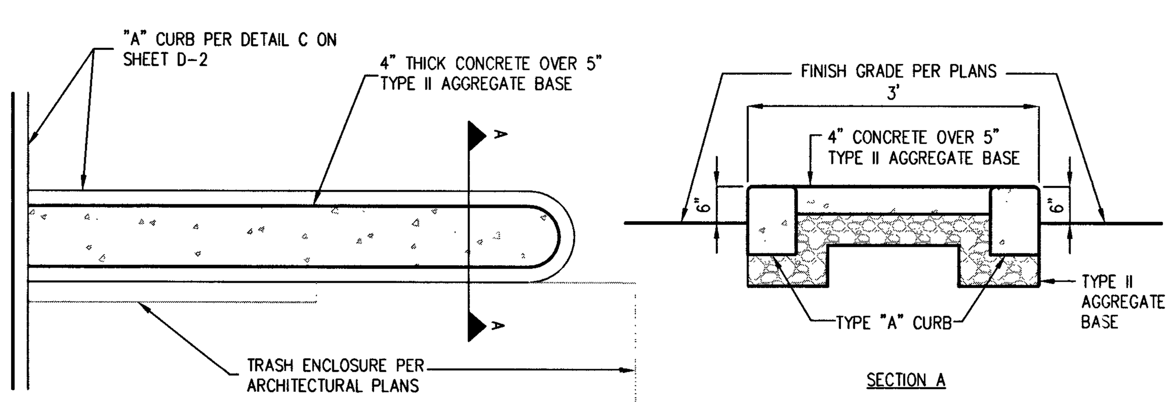

K. CONCRETE PAD
NOT TO SCALE

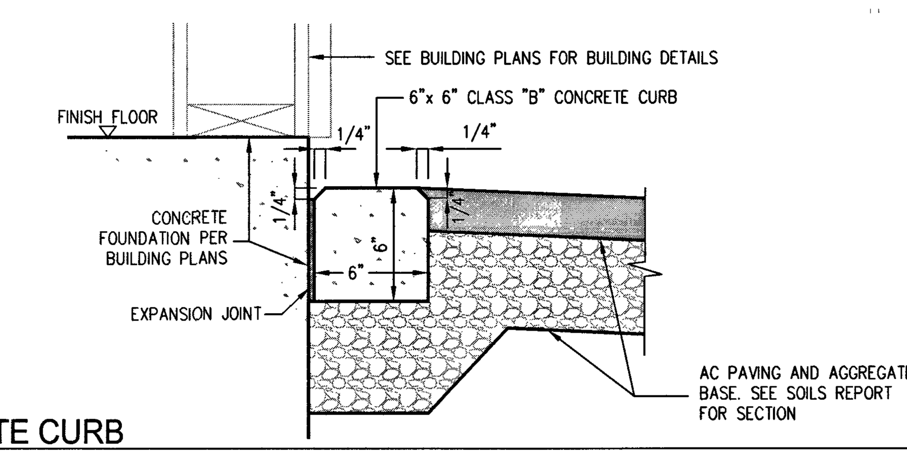

L. CONCRETE CURB
NOT TO SCALE

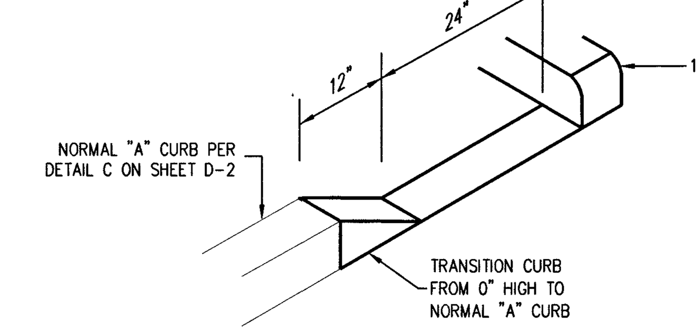

M. CURB OPENING
NOT TO SCALE

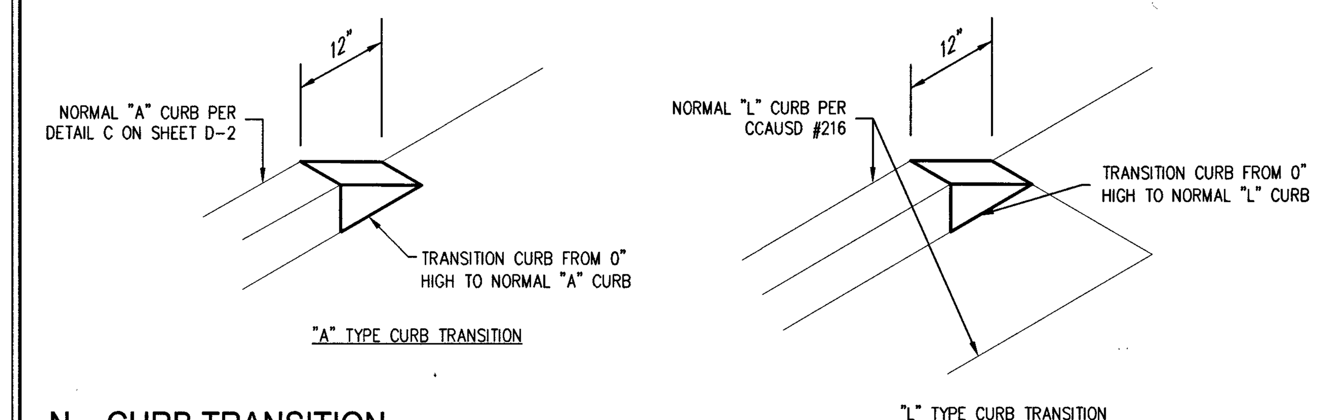

N. CURB TRANSITION
NOT TO SCALE

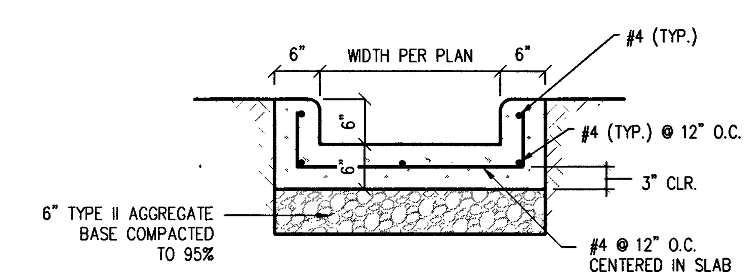

O. CONCRETE FLUME
NOT TO SCALE

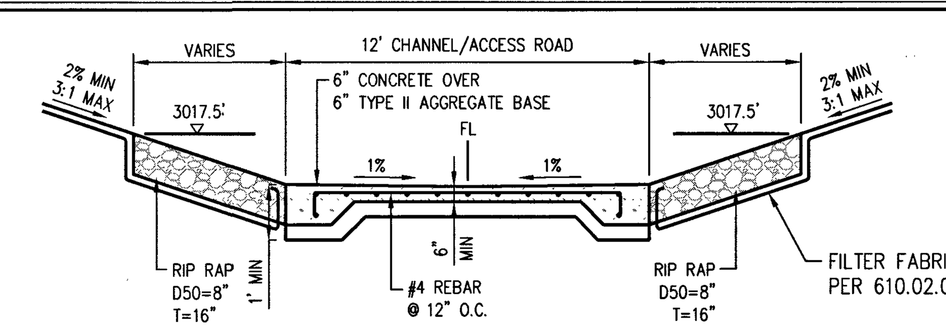

P. OFFSITE CHANNEL/ACCESS ROAD
NOT TO SCALE

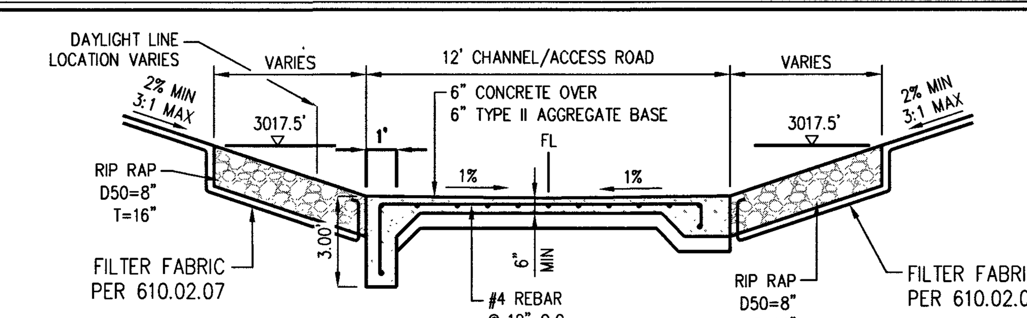

Q. OFFSITE CHANNEL/ACCESS ROAD W/ CUTOFF WALL
NOT TO SCALE

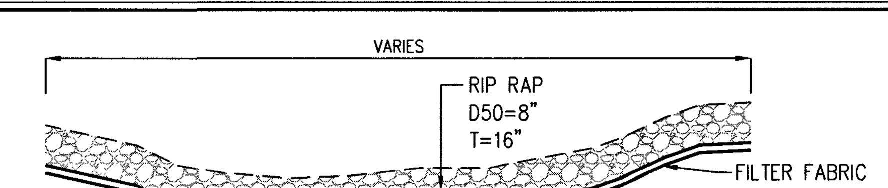

R. RIP RAP DETAIL
NOT TO SCALE

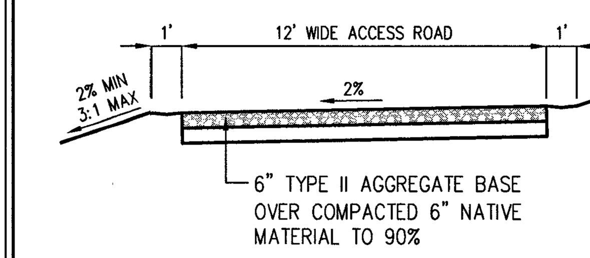

S. ACCESS ROAD
NOT TO SCALE

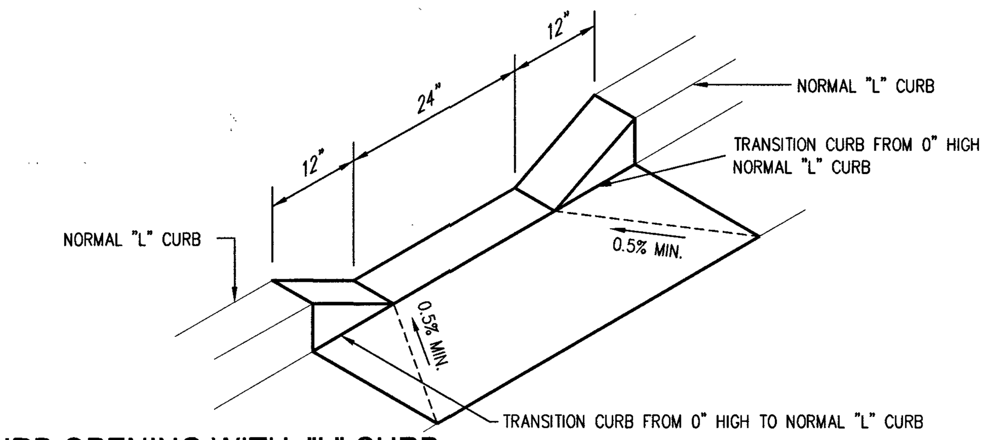

T. CURB OPENING WITH "L" CURB
NOT TO SCALE

NOTE
THE DETAILS ON THIS SHEET ARE MINIMUM ADA STANDARDS THAT MUST BE COMPLIED WITH. ALL RAMPS, SURFACES, DETECTABLE WARNINGS & LANDINGS MUST COMPLY WITH ICC/ANSI A117.1-2003. THE CONTRACTOR SHALL ADVISE THE ENGINEER OF FIELD CONDITIONS THAT DO NOT COMPLY WITH THE MINIMUM ADA STANDARDS SHOWN HEREON.

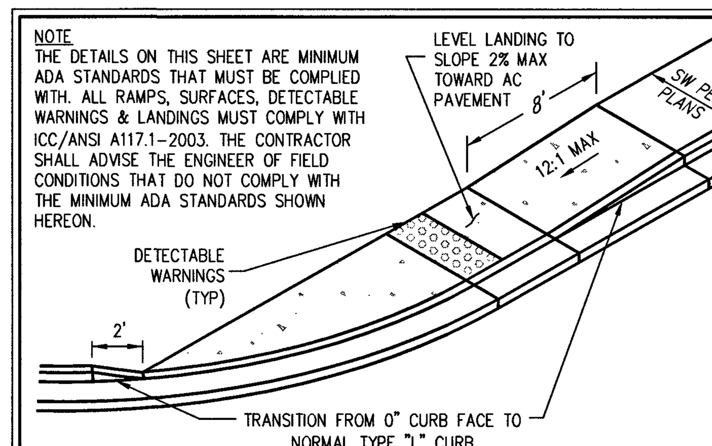

U. SIDEWALK RAMP
NOT TO SCALE

AVOID OVERHEAD POWER LINE CONTACT. IT'S COSTLY.
CALL BEFORE YOU OVERHEAD
1-702-227-2929

Call before you Dig
Avoid cutting underground utility lines. It's costly.
Call 811
OR
1-800-227-2600
AND
CLARK COUNTY TRAFFIC OPERATIONS
1-702-455-6000

AVOID HITTING UNDERGROUND TRAFFIC SIGNAL SYSTEMS AND STREET LIGHT SYSTEM CONDUITS. IT'S COSTLY.
Call before you UnderGround
1-702-455-6000
CLARK COUNTY TRAFFIC OPERATIONS
AND
1-702-432-5300
FREEWAY & ARTERIAL SYSTEM OF TRANSPORTATION (F.A.S.T)

SLATER HANIFAN GROUP
CONSULTING ENGINEERS & PLANNERS
5740 S. ARVILLE STREET #216, LAS VEGAS, NV 89118
PHONE (702) 284-5300 FAX (702) 284-5399

NO.	DESCRIPTION	DATE	BY	APP. DATE	APP.

CITY OF LAS VEGAS

ETHOS THREE ARCHITECTURE
SKYE CANYON SOMERSET ACADEMY
DETAIL SHEET

S12 T19S R59E

DATE: 11/1/17
DRAFTER: DNP
DESIGNER: BCC
CHECKED: STS
PROJECT NO. ETA1601-000

PROFESSIONAL ENGINEER - STATE OF NEVADA
JERRY SLATER
Exp. 06/30/2018
CIVIL
No. 14167
11.1.17

D-2
SHEET 9 OF 15
HANSEN NO. 68370
DWG NO. 715-196

j:\eta1601-000 skye canyon academy\dwg\improv\eta1601-000dtl.dwg 11/1/2017 3:35 PM Dominic Panaligan

DIAMETER	WEIGHT	A	B	C *	L	W
18"	670	9"	2'-1"	2'-1"	4'-2"	3'
24"	1300	9 1/2"	3'-8"	2'-6"	6'	4'
30"	1850	1'	4'-5"	1'-8"	6'-1"	5'
36"	3500	1'-3"	5'-2"	2'-1"	8'-1"	6'
42"	4930	1'-9"	5'-3"	2'-11"	8'-2"	6'-2"
48"	6700	2'	6'	2'-2"	8'-2"	7'
54"	7150	2'-3"	5'-6"	2'-9"	8'-3"	6'-10"

* For Reference Only

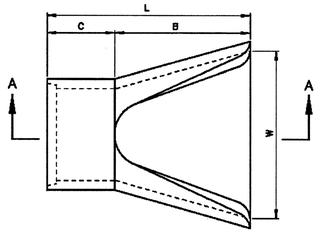

PLAN

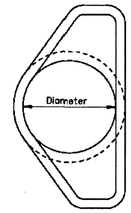

END VIEW

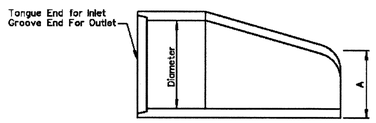

SECTION A-A

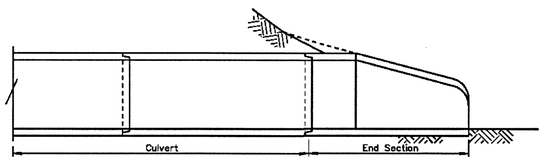

CROSS SECTION VIEW
18" RCP TO 54" RCP

NOTES:

1. CLASS AND TYPE OF CONCRETE SHALL BE AS SPECIFIED FOR REINFORCED CONCRETE PIPE.
2. STRUCTURAL DESIGN OF END SECTION SHALL CONFORM TO THAT OF STANDARD REINFORCED CONCRETE CULVERT PIPE.
3. LENGTH OF PIPE SHOWN ON THE DESIGN PLANS DOES NOT INCLUDE CONNECTOR SECTION (LENGTH C).
4. CONTACT HYDRAULICS ENGINEER FOR SIZES NOT LISTED.
5. ACTUAL DIMENSIONS OF END SECTIONS MAY VARY BY MANUFACTURER. ADJUST PIPE LENGTHS AS NECESSARY TO ACCOMMODATE PRECAST END SECTIONS USED. SEE SHEETS R-1.1.2 AND R-2.1.4 FOR EXTENSION BEYOND FILL SLOPE AND PIPE PAY LENGTHS.

NEVADA DEPARTMENT OF TRANSPORTATION

RCP END SECTION
18" RCP TO 54" RCP

Signed Original On File | R-2.3.1 (603) | CHIEF HYDRAULICS ENGINEER | ADOPTED 1/75 | REVISION 8/09

DROP INLET			
MODEL NO.	A	B	*WEIGHT
DI363636	36"	42"	3748 LBS.
DI363648	48"	54"	4752 LBS.

*BOX ONLY

FRAME AND GRATE			
MODEL NO.	RATING	D	WEIGHT
SG3636-DIP	PEDESTRIAN	1 1/2"	177 LBS.
SG3636-DIT	TRAFFIC	3"	342 LBS.

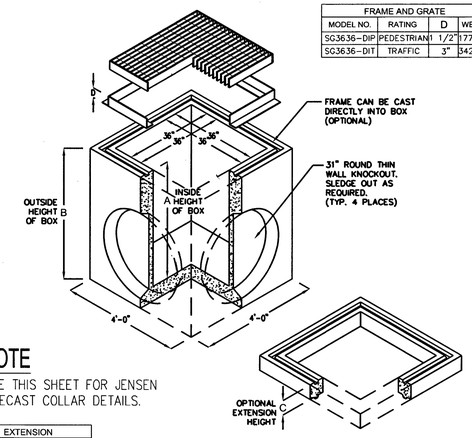

NOTE

SEE THIS SHEET FOR JENSEN PRECAST COLLAR DETAILS.

EXTENSION		
MODEL NO.	C	WEIGHT
RS363606	6"	525 LBS.
RS363612	12"	1050 LBS.

- FRAME AND GRATE ASSEMBLY AVALIABLE IN TRAFFIC OR PEDESTRIAN MODELS.
- FRAME AND SOLID COVER ASSEMBLY AVALIABLE IN TRAFFIC OR PEDESTRIAN MODELS.
- DESIGN FOR H-20-44 BRIDGE LOADING.
- ASSEMBLY TO BE PLACED ON A 6" BASE OF CRUSHER RUN FOR EASE OF INSTALLATION AND EVEN LOAD DISTRIBUTION.
- FOR COMPLETE DESIGN AND PRODUCT INFORMATION, CONTACT JENSEN PRECAST.
- ILLUSTRATION IS TYPICAL ONLY OF GENERAL SERIES CONFIGURATION: FOR SPECIFIC CONFIGURATION, CALL JENSEN PRECAST.

36" X 36"
DRAIN INLET

JENSEN PRECAST

DI3636

REV DWG DATE 11-28-00

DROP INLET			
MODEL NO.	A	B	*WEIGHT
DI242436	36"	42"	1900 LBS.
DI242448	48"	54"	2500 LBS.

*BOX ONLY

FRAME AND GRATE			
MODEL NO.	RATING	D	WEIGHT
SG2424-DIP	PEDESTRIAN	1 1/2"	41 LBS.
SG2424-DIT	TRAFFIC	3"	120 LBS.

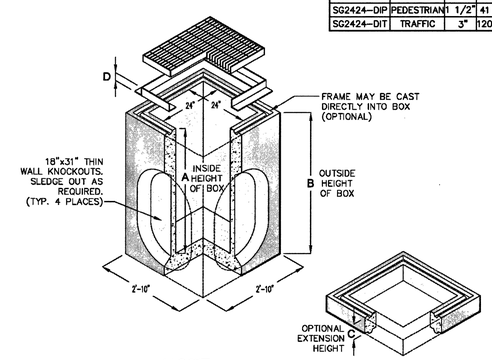

NOTE

SEE THIS SHEET FOR JENSEN PRECAST COLLAR DETAILS.

EXTENSION		
MODEL NO.	C	WEIGHT
RS242406	6"	300 LBS.
RS242412	12"	600 LBS.

- FRAME AND GRATE ASSEMBLY AVALIABLE IN TRAFFIC OR PEDESTRIAN MODELS.
- DESIGN FOR H-20-44 BRIDGE LOADING.
- ASSEMBLY TO BE PLACED ON A 6" BASE OF CRUSHER RUN FOR EASE OF INSTALLATION AND EVEN LOAD DISTRIBUTION.
- FOR COMPLETE DESIGN AND PRODUCT INFORMATION, CONTACT JENSEN PRECAST.
- ILLUSTRATION IS TYPICAL ONLY OF GENERAL SERIES CONFIGURATION: FOR SPECIFIC CONFIGURATION, CALL JENSEN PRECAST.

24" X 24"
DRAIN INLET

JENSEN PRECAST

DI2424

REV DWG DATE 11-28-00

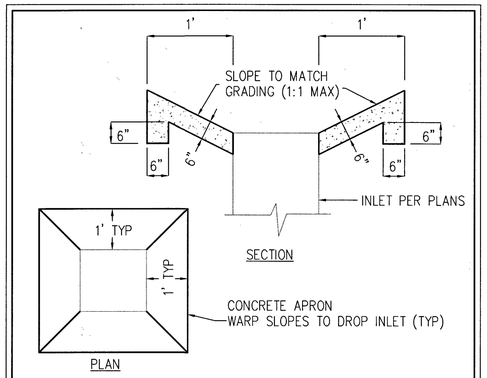

DROP INLET APRON DETAIL

NOT TO SCALE

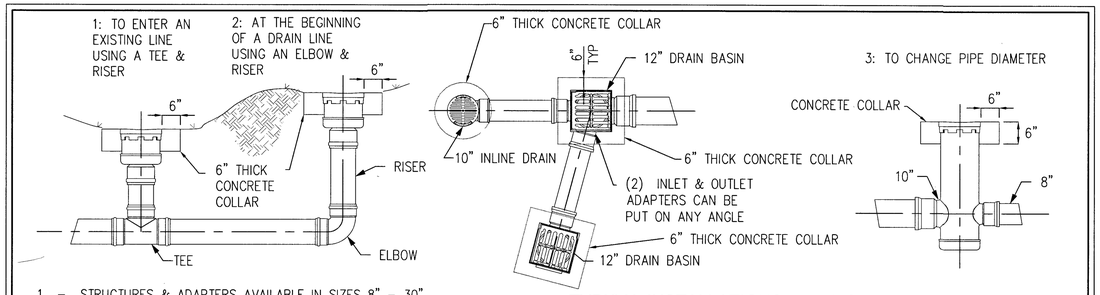

1 - STRUCTURES & ADAPTERS AVAILABLE IN SIZES 8" - 30"
2 - ADAPTERS CAN BE MOUNTED ON ANY ANGLE 0° TO 360°, TO DETERMINE MINIMUM ANGLE BETWEEN ADAPTERS SEE DRAWING NO. 7001-110-012
3 - DRAIN BASIN TO BE CUSTOM MANUFACTURED ACCORDING TO PLAN DETAILS RISERS ARE NEEDED FOR BASINS OVER 84" DUE TO SHIPPING RESTRICTIONS SEE DRAWING NO. 7001-110-065

TYPICAL INSTALLATIONS

TYPICAL INSTALLATION OF NYLOPLAST DRAIN BASIN AND INLINE DRAIN. ALL DRAINS TO COMPLY WITH CCAUSD 421.

NOTE

SEE THIS SHEET FOR NDS CONCRETE COLLAR DETAILS.

NDS INLINE DRAIN INSTALLATION DETAILS

NOT TO SCALE

AVOID OVERHEAD POWER LINE CONTACT. IT'S COSTLY.
CALL BEFORE YOU OVERHEAD
1-702-227-2929

Call before you Dig
Avoid cutting underground utility lines. It's costly.
Call 811
OR
1-800-227-2600
AND
CLARK COUNTY TRAFFIC OPERATIONS
1-702-455-6000

AVOID HITTING UNDERGROUND TRAFFIC SIGNAL SYSTEMS AND STREET LIGHT SYSTEM CONDUITS. IT'S COSTLY.
Call before you UnderGround
1-702-455-6000
CLARK COUNTY TRAFFIC OPERATIONS
AND
1-702-432-5300
FREEWAY & ARTERIAL SYSTEM OF TRANSPORTATION (F.A.S.T)

SLATER HANIFAN GROUP
CONSULTING ENGINEERS & PLANNERS
5740 S. ARVILLE STREET #216, LAS VEGAS, NV 89118
PHONE (702) 284-5300 FAX (702) 284-5399

NO.	DESCRIPTION	DATE	BY	APP. DATE	APP.

CITY OF LAS VEGAS

ETHOS THREE ARCHITECTURE

SKYE CANYON SOMERSET ACADEMY

DETAIL SHEET

S12 T19S R59E

DATE: 11/1/17
DRAFTER: DNP
DESIGNER: BCC
CHECKED: STS
PROJECT NO. ETA1601-000

PROFESSIONAL ENGINEER - STATE OF NEVADA
JERRY A. CASTRO
Exp. 06/30/2018
CIVIL
No. 14167
11-1-17

D-3
SHEET 10 OF 15

HANSEN NO. 68370
DWG NO. 715-196

J:\eta1601-000 skye canyon academy\dwg\imperial\eta1601-000dtl.dwg 11/1/2017 3:35 PM Dominic Pandigan

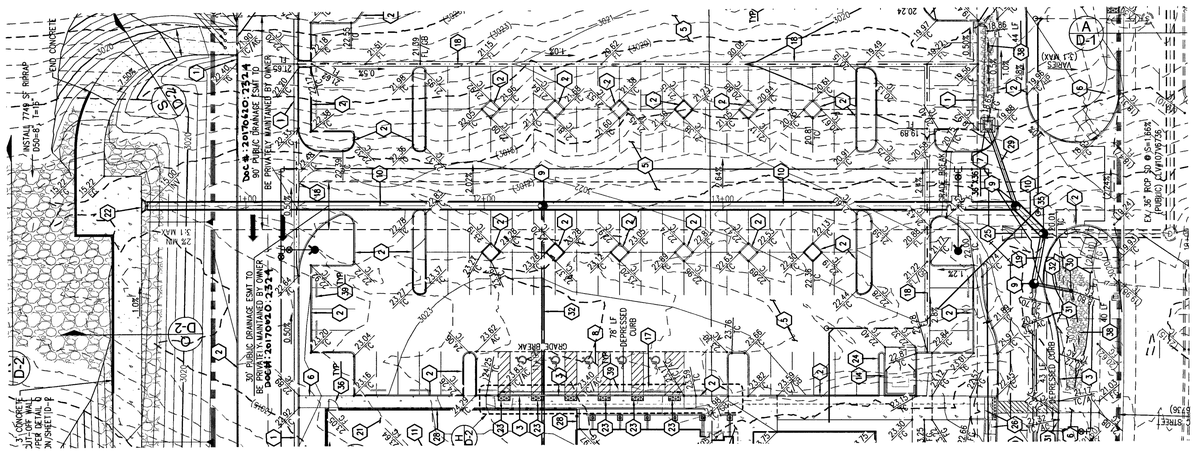

STORM DRAIN #1 - PLAN VIEW

(PRIVATE)

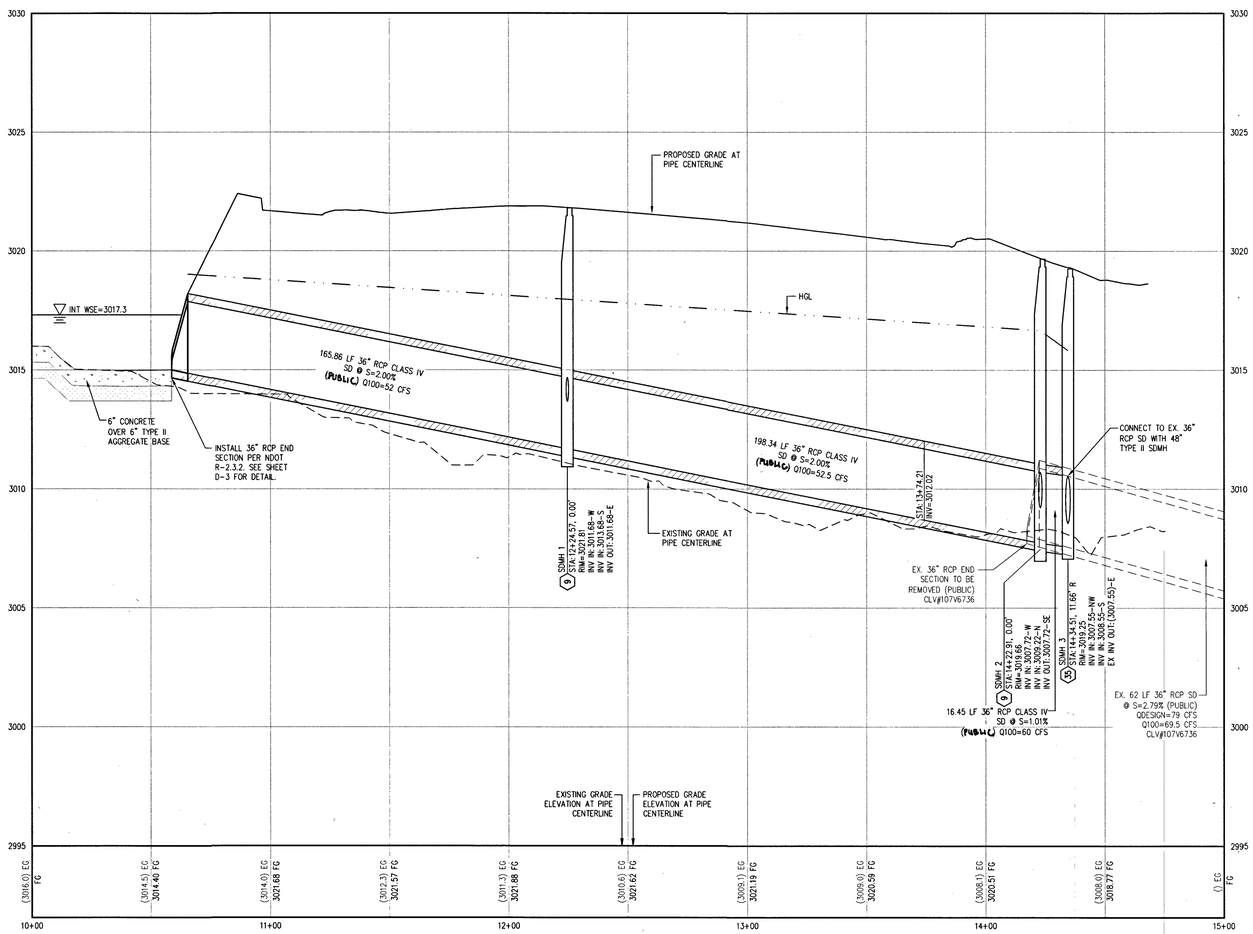

STORM DRAIN #1 - PROFILE VIEW

HORIZ: 1" = 30'
VERT: 1" = 3'

KEY MAP
NOT TO SCALE

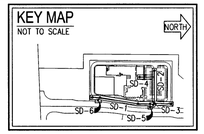

GRADING NOTES

1. "L" TYPE CURB PER CCAUSD DWG NO. 216.
2. "A" CURB PER DETAIL C ON SHEET D-2.
3. "DEPRESSED" CURB PER DETAIL D ON SHEET D-2.
4. CURB OPENING PER DETAIL E ON SHEET D-2.
5. AC PARKING AREA. SEE SOILS REPORT FOR SECTION.
6. 4" THICK CONCRETE SIDEWALK OVER 5" MIN TYPE II AGG. BASE. SEE LANDSCAPE PLAN FOR WIDTH AND FINISH.
7. INSTALL JENSEN PRECAST DRAIN INLET PER DETAILS ON SHEET DT-3 (GRATE SIZE PER PLAN) WITH APRON.
8. HANDICAPPED VAN ACCESSIBLE PARKING STALL IN ACCORDANCE WITH LVMC 19.08.110(2) WITH SIGNAGE PER LVMC 11.52.135.
9. 48" TYPE II STORM DRAIN MANHOLE PER CCAUSD NO. 401 & 405.
10. 36" RCP CLASS III SD, LENGTH PER PLAN.
11. CHILD PLAY AREA. SEE LANDSCAPE PLANS FOR CONSTRUCTION MATERIALS AND HORIZONTAL DIMENSIONS.
12. TURF FIELD. SEE LANDSCAPE PLANS FOR HORIZONTAL DIMENSIONS AND STRIPING DETAILS.
13. BASKETBALL COURT. SEE LANDSCAPE PLANS FOR HORIZONTAL DIMENSIONS AND STRIPING DETAILS.
14. TRASH ENCLOSURE. SEE ARCHITECTURAL PLANS FOR CONSTRUCTION MATERIALS AND DETAILS.
15. SIDEWALK RAMP WITH ARMOR TILE TRUNCATED DOMES OR EQUIVALENT PER CCAUSD NO. 235, CASE II & 235.1.
16. 6" WIDE ZURN TRENCH DRAIN (OR APPROVED EQUAL) PER DETAIL G ON SHEET D-2.
17. INSTALL PRECAST BUMPER BLOCKS PER CCAUSD NO. 238 OR EQUIVALENT (TYPICAL, WHERE SHOWN ON PLANS).
18. 2-FT WIDE VALLEY GUTTER PER DETAIL F ON SHEET D-2.
19. INSTALL 24" PVC STORM DRAIN.
20. 48" TYPE I STORM DRAIN MANHOLE PER CCAUSD NO. 401.
21. AC PAVEMENT. SEE SOILS REPORT FOR SECTION.
22. RCP END SECTION PER NDOT R-2.3.1. SEE SHEET D-3 FOR DETAIL.
23. ARMOR TILE TRUNCATED DOMES OR EQUIVALENT PER CCAUSD NO. 235, CASE II & 235.1.
24. CONCRETE PAD PER DETAIL K ON SHEET D-2.
25. REMOVE END SECTION AND 9 LF EX. 36" RCP SD.
26. CONSTRUCT SIDEWALK RAMPS WITH ARMOR TILE TRUNCATED DOMES PER DETAIL A ON SHEET D-2.
27. 6" WIDE CONCRETE CURB PER DETAIL L ON SHEET D-2.
28. 12" WIDE CONCRETE CURB PER DETAIL I ON SHEET D-2.
29. INSTALL 18" PVC STORM DRAIN.
30. 12" NDS SQUARE DRAIN (OR APPROVED EQUAL) PER DETAILS ON SHEET D-3.
31. TRANSITION CURB PER DETAIL N ON D-2.
32. INSTALL 12" PVC STORM DRAIN.
33. INSTALL SIDEWALK DRAIN PER CCAUSD #236.
34. CURB OPENING PER DETAIL M ON SHEET D-2.
35. 60" TYPE III STORM DRAIN MANHOLE PER CCAUSD NO. 401 & 405.
36. INSTALL PEDESTRIAN GATE PER ARCHITECT PLANS BY OTHERS.
37. INSTALL 2' WIDE CONCRETE FLUME PER DETAIL O ON SHEET D-2.
38. INSTALL TREATMENT SWALE: MIN 9" DEEP, 4:1 SIDE SLOPE, D50=3" (LANDSCAPE ROCK), AND LESS THAN OR EQUAL TO 1% SLOPE.
39. INSTALL WHEEL STOP PER CCAUSD NO. 238.
40. CURB OPENING PER DETAIL T ON SHEET D-2.
41. DIRECTIONAL SIDEWALK RAMP PER DETAIL U ON SHEET D-2.

STORM WATER RUNOFF MANAGEMENT

(REQUIRED FOR ALL SITES GREATER THAN 1 ACRE (43,560 SQ.FT.))

1. THE OWNER, SITE DEVELOPER, CONTRACTOR AND/OR THEIR AUTHORIZED AGENTS SHALL EACH DAY REMOVE ALL SEDIMENT, MUD, CONSTRUCTION DEBRIS, OR OTHER POTENTIAL POLLUTANTS THAT MAY HAVE BEEN DISCHARGED TO, OR ACCUMULATE IN, THE PUBLIC RIGHTS OF WAYS OF CLARK COUNTY AS A RESULT OF CONSTRUCTION ACTIVITIES ASSOCIATED WITH THIS SITE DEVELOPMENT OR CONSTRUCTION PROJECT. SUCH MATERIALS SHALL BE PREVENTED FROM ENTERING THE STORM SEWER SYSTEM.
2. ADDITIONAL CONSTRUCTION SITE DISCHARGE BEST MANAGEMENT PRACTICES MAY BE REQUIRED OF THE OWNER AND HIS OR HER AGENTS DUE TO UNFORESEEN EROSION PROBLEMS OR IF THE SUBMITTED PLAN DOES NOT MEET THE PERFORMANCE STANDARDS SPECIFIED IN TITLE 24.40 AND THE LAS VEGAS VALLEY CONSTRUCTION SITE BEST MANAGEMENT PRACTICES MANUAL.
3. TEMPORARY OR PERMANENT STABILIZATION PRACTICES WILL BE INSTALLED ON DISTURBED AREAS AS SOON AS PRACTICABLE AND NO LATER THAN 14 DAYS AFTER THE CONSTRUCTION ACTIVITY IN THAT PORTION OF THE SITE HAS TEMPORARILY OR PERMANENTLY CEASED. SOME EXCEPTIONS MAY APPLY. REFER TO NEVADA STORMWATER GENERAL PERMIT FOR CONSTRUCTION ACTIVITY NVR100000, SECTION III.A.5.
4. AT A MINIMUM, THE CONTRACTOR OR HIS AGENT SHALL INSPECT ALL DISTURBED AREAS, AREAS USED FOR STORAGE OF MATERIALS AND EQUIPMENT THAT ARE EXPOSED TO PRECIPITATION, VEHICLE ENTRANCE AND EXIT LOCATIONS AND ALL BMPS WEEKLY, AND WITHIN 24 HOURS AFTER ANY ACTUAL RAIN EVENT OF 0.5 INCHES OR MORE. THE CONTRACTOR OR HIS AGENT SHALL UPDATE OR MODIFY THE STORMWATER POLLUTION PREVENTION PLAN AS NECESSARY. SOME EXCEPTIONS TO WEEKLY INSPECTIONS MAY APPLY, SUCH AS SUSPENSION OF LAND DISTURBANCE ACTIVITIES. REFER TO NEVADA STORMWATER GENERAL PERMIT FOR CONSTRUCTION ACTIVITY NVR100000, SECTION III.A.12.
5. ACCUMULATED SEDIMENT IN BMPS SHALL BE REMOVED WITHIN SEVEN DAYS AFTER A STORMWATER RUNOFF EVENT OR PRIOR TO THE NEXT ANTICIPATED STORM EVENT, WHICHEVER IS EARLIER. SEDIMENT MUST BE REMOVED WHEN BMP DESIGN CAPACITY HAS BEEN REDUCED BY 50 PERCENT OR MORE.

FEMA FLOOD ZONE DESIGNATION

THE PROJECT SITE IS LOCATED WITHIN A FEMA DESIGNATED ZONE "X" (AREA OUTSIDE THE 500 YEAR FLOODPLAIN), ON THE FLOOD INSURANCE RATE MAP (FIRM) PANEL: 32003C1750E, DATED SEPTEMBER 27, 2002.

FAST
Call before you UnderGround
1-702-432-5300
FREEWAY & ARTERIAL SYSTEM OF TRANSPORTATION (F.A.S.T)

AVOID HITTING OVERHEAD POWER LINES. IT'S COSTLY.
CALL BEFORE YOU DO OVERHEAD
1-702-227-2929

Call before you Dig
AVOID CUTTING UNDERGROUND UTILITY LINES. IT'S COSTLY.
Call 811
OR
1-800-227-2600

SLATER HANIFAN GROUP
CONSULTING ENGINEERS & PLANNERS
5740 S. ARVILLE STREET #216, LAS VEGAS, NV 89118
PHONE (702) 284-5300 FAX (702) 284-5399

NO.	DESCRIPTION	DATE	BY	APP DATE	APP

CITY OF LAS VEGAS

ETHOS THREE ARCHITECTURE

SKYE CANYON SOMERSET ACADEMY

PLAN AND PROFILE

S12 T18S R59E

DATE:	11/1/17
DRAFTER:	DNP
DESIGNER:	BCC
CHECKED:	STS

PROJECT NO. ETA1601-000

PROFESSIONAL ENGINEER - STATE OF NEVADA
JERRY J. [illegible]
06/30/2018
CIVIL
No. 14167
11-1-17

P-1

SHEET 11 OF 15

HANSEN NO. 68370
DWG NO. 715-196

k:\eta1601-000 sky canyon academy\dwg\tenaro\eta1601-000prp.dwg 11/1/2017 3:34 PM Dominic Pandolfo

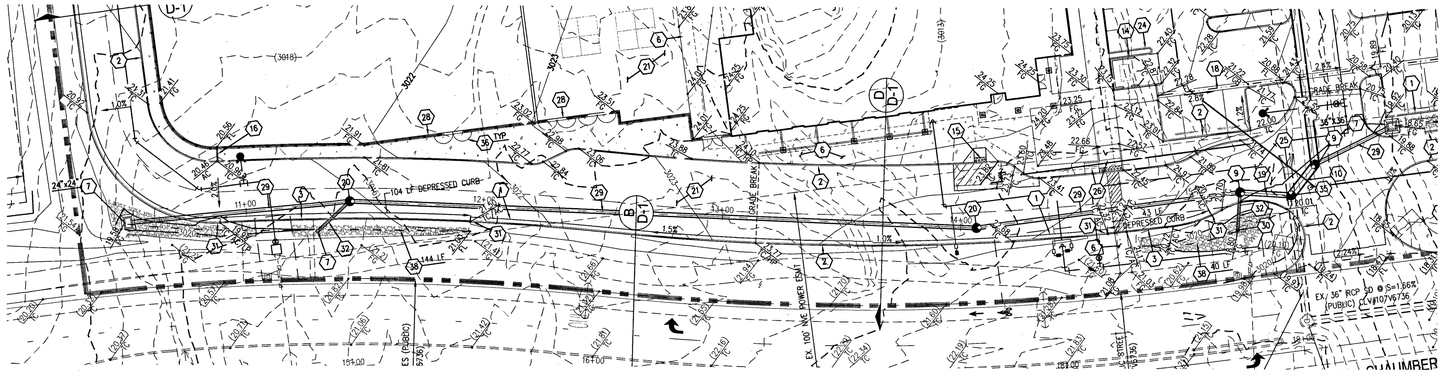

STORM DRAIN #2 - PLAN VIEW

(PRIVATE)

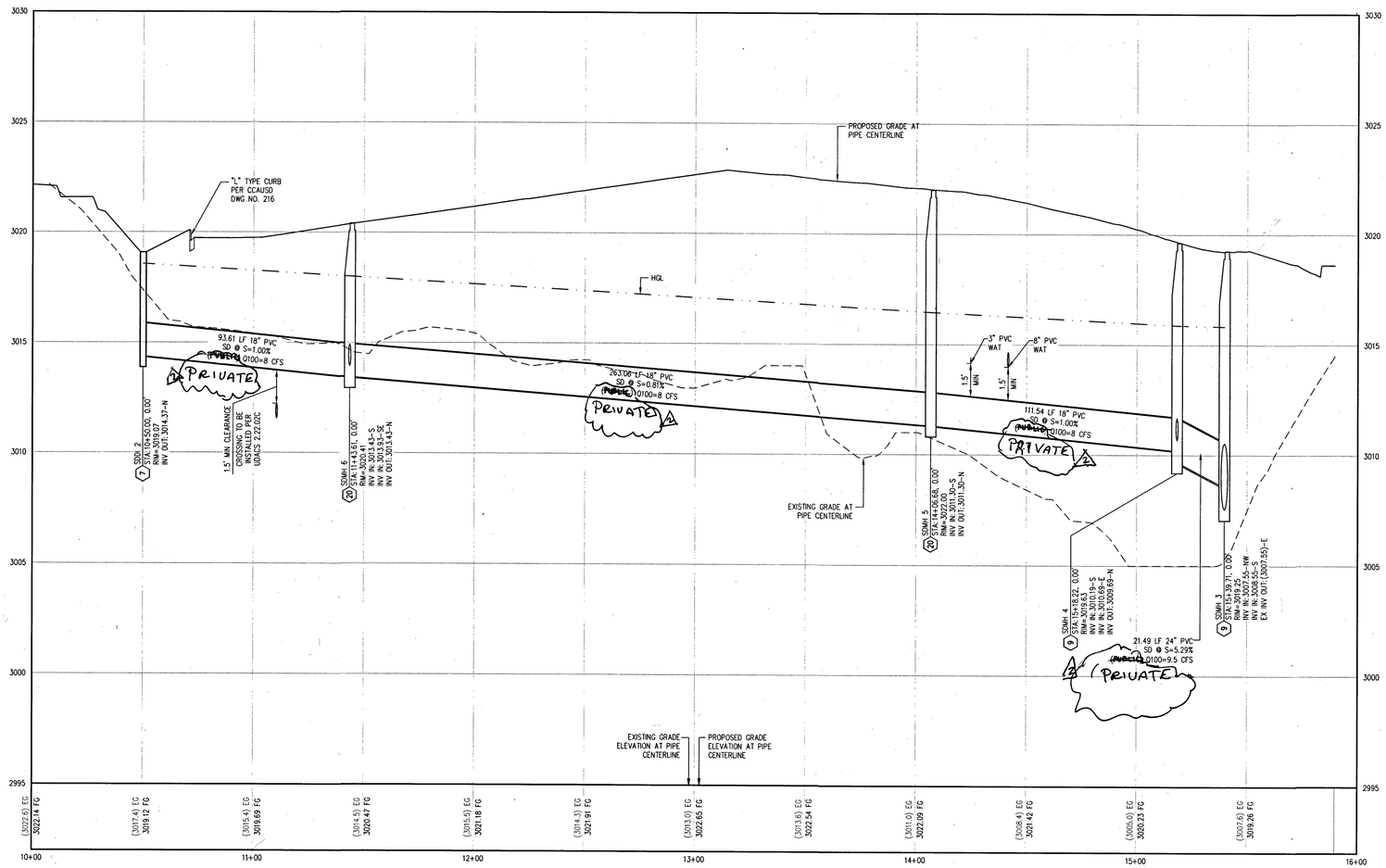

STORM DRAIN #2 - PROFILE VIEW

HORIZ: 1" = 30'
VERT: 1" = 3'

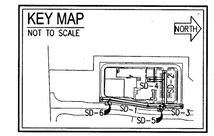

GRADING NOTES

1. "L" TYPE CURB PER CCAUSD DWG NO. 216.
2. "A" CURB PER DETAIL C ON SHEET D-2.
3. "DEPRESSED" CURB PER DETAIL D ON SHEET D-2.
4. CURB OPENING PER DETAIL E ON SHEET D-2.
5. AC PARKING AREA. SEE SOILS REPORT FOR SECTION.
6. 4" THICK CONCRETE SIDEWALK OVER 5" MIN TYPE II AGG. BASE. SEE LANDSCAPE PLAN FOR WIDTH AND FINISH.
7. INSTALL JENSEN PRECAST DRAIN INLET PER DETAILS ON SHEET DT-3 (GRATE SIZE PER PLAN) WITH APRON.
8. HANDICAPPED VAN ACCESSIBLE PARKING STALL IN ACCORDANCE WITH LVMC 19.08.110(2) WITH SIGNAGE PER LVMC 11.32.135.
9. 48" TYPE II STORM DRAIN MANHOLE PER CCAUSD NO. 401 & 405.
10. 36" RCP CLASS III SD, LENGTH PER PLAN.
11. CHILD PLAY AREA. SEE LANDSCAPE PLANS FOR CONSTRUCTION MATERIALS AND HORIZONTAL DIMENSIONS.
12. TURF FIELD. SEE LANDSCAPE PLANS FOR HORIZONTAL DIMENSIONS AND STRIPING DETAILS.
13. BASKETBALL COURT. SEE LANDSCAPE PLANS FOR HORIZONTAL DIMENSIONS AND STRIPING DETAILS.
14. TRASH ENCLOSURE. SEE ARCHITECTURAL PLANS FOR CONSTRUCTION MATERIALS AND DETAILS.
15. SIDEWALK RAMP WITH ARMOR TILE TRUNCATED DOMES OR EQUIVALENT PER CCAUSD NO. 235, CASE II & 235.1.
16. 6" WIDE ZURN TRENCH DRAIN (OR APPROVED EQUAL) PER DETAIL C ON SHEET D-2.
17. INSTALL PRECAST BUMPER BLOCKS PER CCAUSD NO. 238 OR EQUIVALENT (TYPICAL, WHERE SHOWN ON PLANS).
18. 2-FT WIDE VALLEY GUTTER PER DETAIL F ON SHEET D-2.
19. INSTALL 24" PVC STORM DRAIN.
20. 48" TYPE I STORM DRAIN MANHOLE PER CCAUSD NO. 401.
21. AC PAVEMENT. SEE SOILS REPORT FOR SECTION.
22. RCP END SECTION PER NDOT R-2.3.1. SEE SHEET D-3 FOR DETAIL.
23. ARMOR TILE TRUNCATED DOMES OR EQUIVALENT PER CCAUSD NO. 235, CASE II & 235.1.
24. CONCRETE PAD PER DETAIL K ON SHEET D-2.
25. REMOVE END SECTION AND 9 LF EX. 36" RCP SD.
26. CONSTRUCT SIDEWALK RAMPS WITH ARMOR TILE TRUNCATED DOMES PER DETAIL A ON SHEET D-2.
27. 6" WIDE CONCRETE CURB PER DETAIL L ON SHEET D-2.
28. 12" WIDE CONCRETE CURB PER DETAIL I ON SHEET D-2.
29. INSTALL 18" PVC STORM DRAIN.
30. 12" NDS SQUARE DRAIN (OR APPROVED EQUAL) PER DETAILS ON SHEET D-3.
31. TRANSITION CURB PER DETAIL N ON D-2.
32. INSTALL 12" PVC STORM DRAIN.
33. INSTALL SIDEWALK DRAIN PER CCAUSD #236.
34. CURB OPENING PER DETAIL M ON SHEET D-2.
35. 60" TYPE III STORM DRAIN MANHOLE PER CCAUSD NO. 401 & 405.
36. INSTALL PEDESTRIAN GATE PER ARCHITECT PLANS BY OTHERS.
37. INSTALL 2' WIDE CONCRETE FLUME PER DETAIL O ON SHEET D-2.
38. INSTALL TREATMENT SWALE: MIN 9" DEEP, 4:1 SIDE SLOPE, D50=3" (LANDSCAPE ROCK), AND LESS THAN OR EQUAL TO 1% SLOPE.
39. INSTALL WHEEL STOP PER CCAUSD NO. 238.
40. CURB OPENING PER DETAIL T ON SHEET D-2.
41. DIRECTIONAL SIDEWALK RAMP PER DETAIL U ON SHEET D-2.

STORM WATER RUNOFF MANAGEMENT

(REQUIRED FOR ALL SITES GREATER THAN 1 ACRE (43,560 SQ.FT.))

1. THE OWNER, SITE DEVELOPER, CONTRACTOR AND/OR THEIR AUTHORIZED AGENTS SHALL EACH DAY REMOVE ALL SEDIMENT ,MUD, CONSTRUCTION DEBRIS, OR OTHER POTENTIAL POLLUTANTS THAT MAY HAVE BEEN DISCHARGED TO, OR ACCUMULATE IN, THE PUBLIC RIGHTS OF WAYS OF CLARK COUNTY AS A RESULT OF CONSTRUCTION ACTIVITIES ASSOCIATED WITH THIS SITE DEVELOPMENT OR CONSTRUCTION PROJECT. SUCH MATERIALS SHALL BE PREVENTED FROM ENTERING THE STORM SEWER SYSTEM.
2. ADDITIONAL CONSTRUCTION SITE DISCHARGE BEST MANAGEMENT PRACTICES MAY BE REQUIRED OF THE OWNER AND HIS OR HER AGENTS DUE TO UNFORESEEN EROSION PROBLEMS OR IF THE SUBMITTED PLAN DOES NOT MEET THE PERFORMANCE STANDARDS SPECIFIED IN TITLE 24.40 AND THE LAS VEGAS VALLEY CONSTRUCTION SITE BEST MANAGEMENT PRACTICES MANUAL.
3. TEMPORARY OR PERMANENT STABILIZATION PRACTICES WILL BE INSTALLED ON DISTURBED AREAS AS SOON AS PRACTICABLE AND NO LATER THAN 14 DAYS AFTER THE CONSTRUCTION ACTIVITY IN THAT PORTION OF THE SITE HAS TEMPORARILY OR PERMANENTLY CEASED. SOME EXCEPTIONS MAY APPLY; REFER TO NEVADA STORMWATER GENERAL PERMIT FOR CONSTRUCTION ACTIVITY NVR100000, SECTION III.A.5.
4. AT A MINIMUM, THE CONTRACTOR OR HIS AGENT SHALL INSPECT ALL DISTURBED AREAS, AREAS USED FOR STORAGE OF MATERIALS AND EQUIPMENT THAT ARE EXPOSED TO PRECIPITATION, VEHICLE ENTRANCE AND EXIT LOCATIONS AND ALL BMPS WEEKLY, AND WITHIN 24 HOURS AFTER ANY ACTUAL RAIN EVENT OF 0.5 INCHES OR MORE. THE CONTRACTOR OR HIS AGENT SHALL UPDATE OR MODIFY THE STORMWATER POLLUTION PREVENTION PLAN AS NECESSARY. SOME EXCEPTIONS TO WEEKLY INSPECTIONS MAY APPLY, SUCH AS SUSPENSION OF LAND DISTURBANCE ACTIVITIES. REFER TO NEVADA STORMWATER GENERAL PERMIT FOR CONSTRUCTION ACTIVITY NVR100000, SECTION III.A.12.
5. ACCUMULATED SEDIMENT IN BMPS SHALL BE REMOVED WITHIN SEVEN DAYS AFTER A STORMWATER RUNOFF EVENT OR PRIOR TO THE NEXT ANTICIPATED STORM EVENT, WHICHEVER IS EARLIER. SEDIMENT MUST BE REMOVED WHEN BMP DESIGN CAPACITY HAS BEEN REDUCED BY 50 PERCENT OR MORE.

FEMA FLOOD ZONE DESIGNATION

THE PROJECT SITE IS LOCATED WITHIN A FEMA DESIGNATED ZONE "X" (AREA OUTSIDE THE 500 YEAR FLOODPLAIN), ON THE FLOOD INSURANCE RATE MAP (FIRM) PANEL: 32003C1750E, DATED SEPTEMBER 27, 2002.

FAST Call before you UnderGround 1-702-432-5300 FREEWAY & ARTERIAL SYSTEM OF TRANSPORTATION (F.A.S.T)

AVOID HITTING OVERHEAD POWER LINES. IT'S COSTLY. CALL BEFORE YOU DO OVERHEAD 1-702-227-2929

Call before you Dig AVOID CUTTING UNDERGROUND UTILITY LINES. IT'S COSTLY. Call 811 OR 1-800-227-2600

SLATER HANIFAN GROUP
CONSULTING ENGINEERS & PLANNERS
5740 S. ARVILLE STREET #216, LAS VEGAS, NV 89118
PHONE (702) 284-5300 FAX (702) 284-5399

NO.	DESCRIPTION	DATE	BY	APP.	APP. DATE
2	CHANGES TO PRIVATE	11/3/2017			

CITY OF LAS VEGAS

ETHOS THREE ARCHITECTURE

SKYE CANYON SOMERSET ACADEMY

PLAN AND PROFILE

S12 T19S R59E

DATE: 11/01/17
DRAFTER: DNP
DESIGNER: BCC
CHECKED: STS

PROJECT NO. ETA1601-000

PROFESSIONAL ENGINEER - STATE OF NEVADA
JOSEPH A. SLATER
06/30/2018
CIVIL
No. 14167
11-1-17

P-2

SHEET 12 OF 15

HANSEN NO. 68370
DWG NO. 716-196

\\eta\eta1601-000 skye canyon ecosteme\dwg\improv\eta1601-000prp.dwg 11/1/2017 3:34 PM Dominic Pannilgan

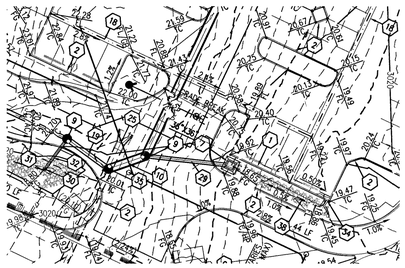

STORM DRAIN #3 - PLAN VIEW
(PRIVATE)

SCALE – 1"=60' (0, 30, 60 FEET)

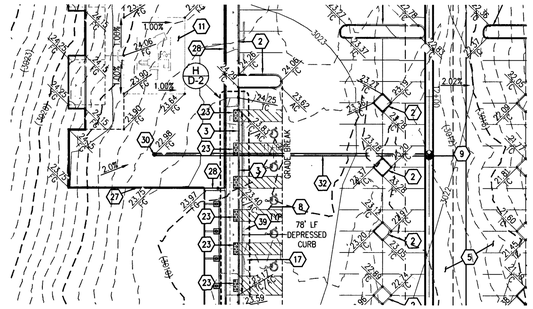

STORM DRAIN #4 - PLAN VIEW
(PRIVATE)

SCALE – 1"=60' (0, 30, 60 FEET)

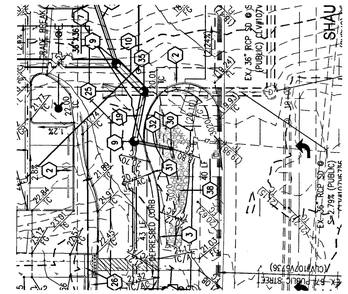

STORM DRAIN #5 - PLAN VIEW
(PRIVATE)

SCALE – 1"=60' (0, 30, 60 FEET)

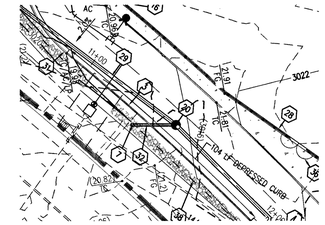

STORM DRAIN #6 - PLAN VIEW
(PRIVATE)

SCALE – 1"=60' (0, 30, 60 FEET)

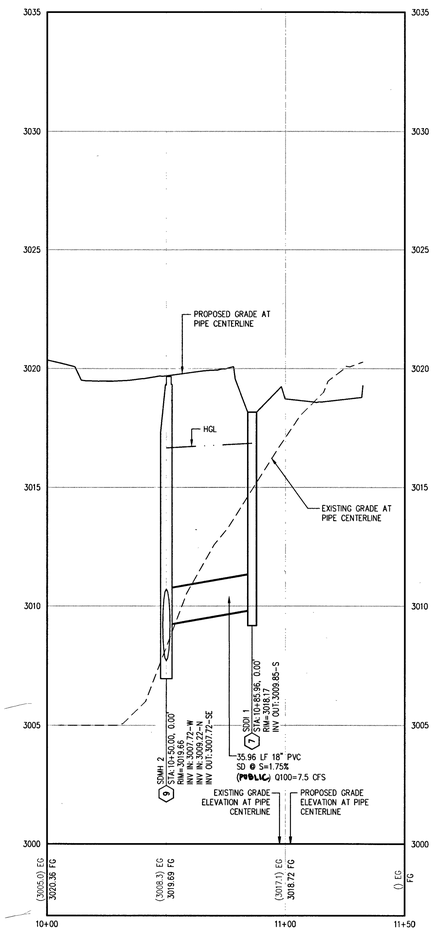

STORM DRAIN #3 - PROFILE VIEW
HORIZ: 1" = 30'
VERT: 1" = 3'

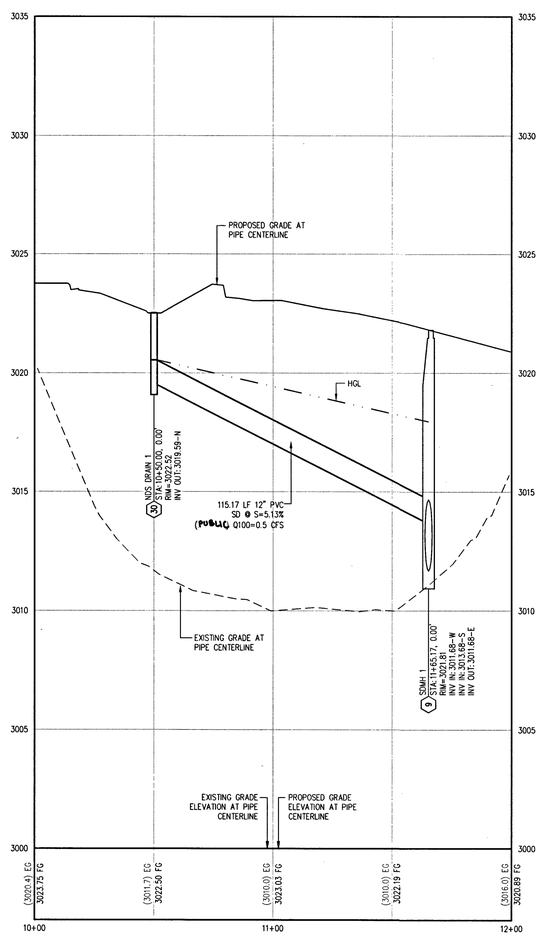

STORM DRAIN #4 - PROFILE VIEW
HORIZ: 1" = 30'
VERT: 1" = 3'

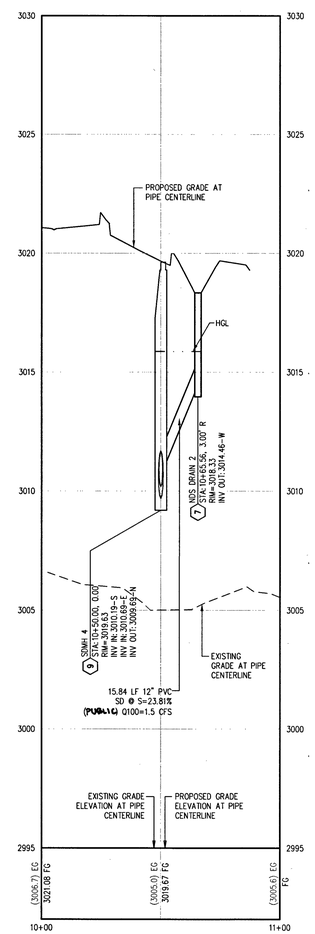

STORM DRAIN #5 - PROFILE VIEW
HORIZ: 1" = 30'
VERT: 1" = 3'

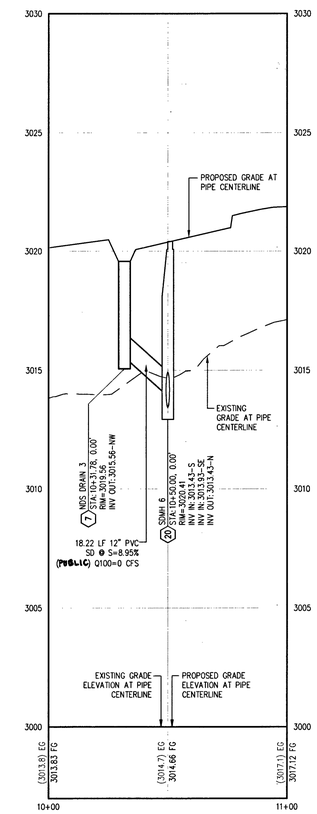

STORM DRAIN #6 - PROFILE VIEW
HORIZ: 1" = 30'
VERT: 1" = 3'

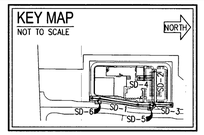

GRADING NOTES

1. "L" TYPE CURB PER CCAUSD DWG NO. 216.
2. "A" CURB PER DETAIL C ON SHEET D-2.
3. "DEPRESSED" CURB PER DETAIL D ON SHEET D-2.
4. CURB OPENING PER DETAIL E ON SHEET D-2.
5. AC PARKING AREA. SEE SOILS REPORT FOR SECTION.
6. 4" THICK CONCRETE SIDEWALK OVER 6" MIN TYPE II AGG. BASE. SEE LANDSCAPE PLAN FOR WIDTH AND FINISH.
7. INSTALL JENSEN PRECAST DRAIN INLET PER DETAILS ON SHEET D1-3 (GRATE SIZE PER PLAN) WITH APRON.
8. HANDICAPPED VAN ACCESSIBLE PARKING STALL IN ACCORDANCE WITH LVMC 19.08.110(2) WITH SIGNAGE PER LVMC 11.52.135.
9. 48" TYPE II STORM DRAIN MANHOLE PER CCAUSD NO. 401 & 405.
10. 36" RCP CLASS III SD, LENGTH PER PLAN.
11. CHILD PLAY AREA. SEE LANDSCAPE PLANS FOR CONSTRUCTION MATERIALS AND HORIZONTAL DIMENSIONS.
12. TURF FIELD. SEE LANDSCAPE PLANS FOR HORIZONTAL DIMENSIONS AND STRIPING DETAILS.
13. BASKETBALL COURT. SEE LANDSCAPE PLANS FOR HORIZONTAL DIMENSIONS AND STRIPING DETAILS.
14. TRASH ENCLOSURE. SEE ARCHITECTURAL PLANS FOR CONSTRUCTION MATERIALS AND DETAILS.
15. SIDEWALK RAMP WITH ARMOR TILE TRUNCATED DOMES OR EQUIVALENT PER CCAUSD NO. 235, CASE II & 235.1.
16. 6" WIDE ZURN TRENCH DRAIN (OR APPROVED EQUAL) PER DETAIL G ON SHEET D-2.
17. INSTALL PRECAST BUMPER BLOCKS PER CCAUSD NO. 238 OR EQUIVALENT (TYPICAL, WHERE SHOWN ON PLANS).
18. 2-FT WIDE VALLEY GUTTER PER DETAIL F ON SHEET D-2.
19. INSTALL 24" PVC STORM DRAIN.
20. 48" TYPE I STORM DRAIN MANHOLE PER CCAUSD NO. 401.
21. AC PAVEMENT. SEE SOILS REPORT FOR SECTION.
22. RCP END SECTION PER NDOT R-2.3.1. SEE SHEET D-3 FOR DETAIL.
23. ARMOR TILE TRUNCATED DOMES OR EQUIVALENT PER CCAUSD NO. 235, CASE II & 235.1.
24. CONCRETE PAD PER DETAIL K ON SHEET D-2.
25. REMOVE END SECTION AND 9 LF EX. 36" RCP SD.
26. CONSTRUCT SIDEWALK RAMPS WITH ARMOR TILE TRUNCATED DOMES PER DETAIL A ON SHEET D-2.
27. 6" WIDE CONCRETE CURB PER DETAIL L ON SHEET D-2.
28. 12" WIDE CONCRETE CURB PER DETAIL I ON SHEET D-2.
29. INSTALL 18" PVC STORM DRAIN.
30. 12" NDS SQUARE DRAIN (OR APPROVED EQUAL) PER DETAILS ON SHEET D-3.
31. TRANSITION CURB PER DETAIL N ON D-2.
32. INSTALL 12" PVC STORM DRAIN.
33. INSTALL SIDEWALK DRAIN PER CCAUSD #236.
34. CURB OPENING PER DETAIL M ON SHEET D-2.
35. 60" TYPE III STORM DRAIN MANHOLE PER CCAUSD NO. 401 & 405.
36. INSTALL PEDESTRIAN GATE PER ARCHITECT PLANS BY OTHERS.
37. INSTALL 2' WIDE CONCRETE FLUME PER DETAIL O ON SHEET D-2.
38. INSTALL TREATMENT SWALE: MIN 9" DEEP, 4:1 SIDE SLOPE, D50=3" (LANDSCAPE ROCK), AND LESS THAN OR EQUAL TO 1% SLOPE.
39. INSTALL WHEEL STOP PER CCAUSD NO. 238.
40. CURB OPENING PER DETAIL T ON SHEET D-2.
41. DIRECTIONAL SIDEWALK RAMP PER DETAIL U ON SHEET D-2.

STORM WATER RUNOFF MANAGEMENT

(REQUIRED FOR ALL SITES GREATER THAN 1 ACRE (43,560 SQ.FT.))

1. THE OWNER, SITE DEVELOPER, CONTRACTOR AND/OR THEIR AUTHORIZED AGENTS SHALL EACH DAY REMOVE ALL SEDIMENT, MUD, CONSTRUCTION DEBRIS, OR OTHER POTENTIAL POLLUTANTS THAT MAY HAVE BEEN DISCHARGED TO, OR ACCUMULATE IN, THE PUBLIC RIGHTS OF WAYS OF CLARK COUNTY AS A RESULT OF CONSTRUCTION ACTIVITIES ASSOCIATED WITH THIS SITE DEVELOPMENT OR CONSTRUCTION PROJECT. SUCH MATERIALS SHALL BE PREVENTED FROM ENTERING THE STORM SEWER SYSTEM.
2. ADDITIONAL CONSTRUCTION SITE DISCHARGE BEST MANAGEMENT PRACTICES MAY BE REQUIRED OF THE OWNER AND HIS OR HER AGENTS DUE TO UNFORESEEN EROSION PROBLEMS OR IF THE SUBMITTED PLAN DOES NOT MEET THE PERFORMANCE STANDARDS SPECIFIED IN TITLE 24.40 AND THE LAS VEGAS VALLEY CONSTRUCTION SITE BEST MANAGEMENT PRACTICES MANUAL.
3. TEMPORARY OR PERMANENT STABILIZATION PRACTICES WILL BE INSTALLED ON DISTURBED AREAS AS SOON AS PRACTICABLE AND NO LATER THAN 14 DAYS AFTER THE CONSTRUCTION ACTIVITY IN THAT PORTION OF THE SITE HAS TEMPORARILY OR PERMANENTLY CEASED. SOME EXCEPTIONS MAY APPLY; REFER TO NEVADA STORMWATER GENERAL PERMIT FOR CONSTRUCTION ACTIVITY NVR100000, SECTION III.A.5.
4. AT A MINIMUM, THE CONTRACTOR OR HIS AGENT SHALL INSPECT ALL DISTURBED AREAS, AREAS USED FOR STORAGE OF MATERIALS AND EQUIPMENT THAT ARE EXPOSED TO PRECIPITATION, VEHICLE ENTRANCE AND EXIT LOCATIONS, AND ALL BMPS WEEKLY, AND WITHIN 24 HOURS AFTER ANY ACTUAL RAIN EVENT OF 0.5 INCHES OR MORE. THE CONTRACTOR OR HIS AGENT SHALL UPDATE OR MODIFY THE STORMWATER POLLUTION PREVENTION PLAN AS NECESSARY. SOME EXCEPTIONS TO WEEKLY INSPECTIONS MAY APPLY, SUCH AS SUSPENSION OF LAND DISTURBANCE ACTIVITIES. REFER TO NEVADA STORMWATER GENERAL PERMIT FOR CONSTRUCTION ACTIVITY NVR100000, SECTION III.A.12.
5. ACCUMULATED SEDIMENT IN BMPS SHALL BE REMOVED WITHIN SEVEN DAYS AFTER A STORMWATER RUNOFF EVENT OR PRIOR TO THE NEXT ANTICIPATED STORM EVENT, WHICHEVER IS EARLIER. SEDIMENT MUST BE REMOVED WHEN BMP DESIGN CAPACITY HAS BEEN REDUCED BY 50 PERCENT OR MORE.

FEMA FLOOD ZONE DESIGNATION

THE PROJECT SITE IS LOCATED WITHIN A FEMA DESIGNATED ZONE 'X' (AREA OUTSIDE THE 500 YEAR FLOODPLAIN), ON THE FLOOD INSURANCE RATE MAP (FIRM) PANEL 32003C1750E, DATED SEPTEMBER 27, 2002.

FAST
Call before you UnderGround
1-702-432-5300
FREEWAY & ARTERIAL SYSTEM OF TRANSPORTATION (F.A.S.T)

AVOID HITTING OVERHEAD POWER LINES. IT'S COSTLY.
CALL BEFORE YOU DO OVERHEAD
1-702-227-2929

Call before you Dig
AVOID CUTTING UNDERGROUND UTILITY LINES. IT'S COSTLY.
Call 811
OR
1-800-227-2600

SLATER HANIFAN GROUP
CONSULTING ENGINEERS & PLANNERS
5740 S. ARVILLE STREET #216, LAS VEGAS, NV 89118
PHONE (702) 284-5300 FAX (702) 284-5399

NO.	DESCRIPTION	DATE	BY	APP DATE	APP

CITY OF LAS VEGAS

ETHOS THREE ARCHITECTURE
SKYE CANYON SOMERSET ACADEMY
PLAN AND PROFILE

S12 T16S R59E

DATE: 11/1/17
DRAFTER: DNP
DESIGNER: BCC
CHECKED: STS

PROJECT NO. ETA1601-000

PROFESSIONAL ENGINEER – STATE OF NEVADA – JERRY T. STEWARD – Exp. 06/30/2018 – CIVIL – No. 14167 – 11-1-17

P-3
SHEET 13 OF 15

HANSEN NO. 68370
DWG NO. 715-196

J:\eta1601-000 skye canyon academy\dwg\improv\eta1601-000snp.dwg 11/1/2017 3:34 PM Dominic Pandiloni

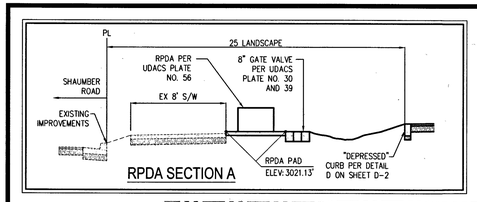

RPDA SECTION A

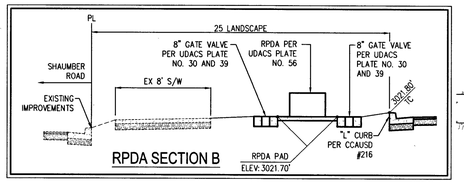

RPDA SECTION B

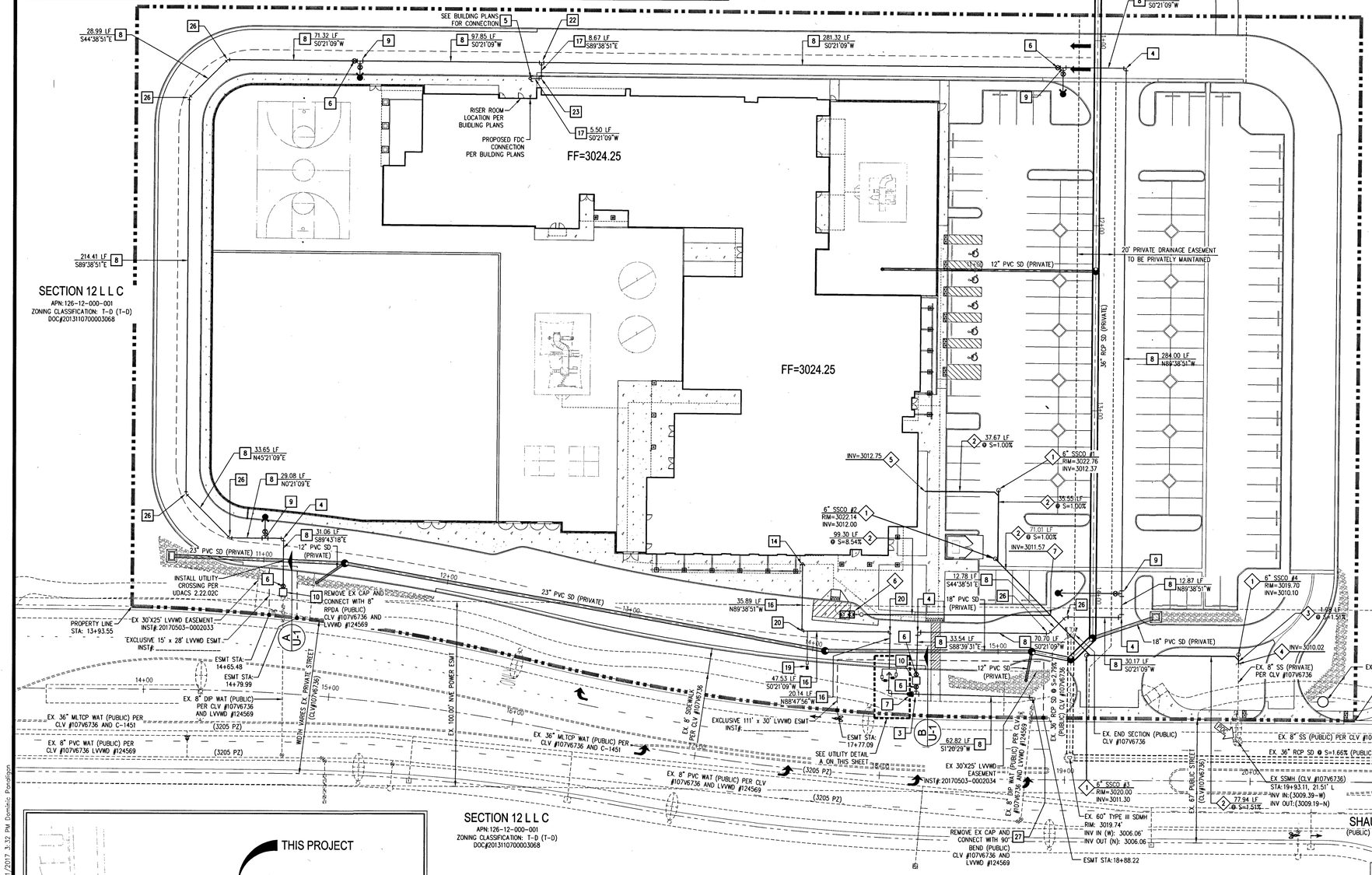

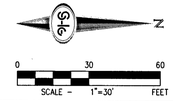

REDUCED PRESSURE PRINCIPLE ASSEMBLY (2) 2"
APPROVED REDUCED PRESSURE PRINCIPLE ASSEMBLY(S) SHALL BE INSTALLED PER THE UDACS PLATE NO. 8. NO WATER SHALL BE TAKEN FROM A SERVICE REQUIRING BACKFLOW PREVENTION UNTIL THE REDUCED PRESSURE PRINCIPLE ASSEMBLY HAS BEEN SUCCESSFULLY TESTED BY THE LVVWD. ANY BLOCK WALL OR OTHER FENCE MATERIAL SHALL BE DESIGNED AND CONSTRUCTED AROUND THE OUTSIDE OF THE EASEMENT(S) TO ALLOW THE DISTRICT DIRECT ACCESS FROM THE ADJACENT RIGHT-OF-WAY. EASEMENTS SHALL BE CLEARLY MARKED OR STAKED PRIOR TO THE START OF CONSTRUCTION.

REDUCED PRESSURE DETECTOR ASSEMBLY (2) 8"
THE **WATTS SERIES 909 REDUCED PRESSURE DETECTOR ASSEMBLIES** SHALL BE INSTALLED IN ACCORDANCE WITH THE UDACS PLATE NO. 56. NO WATER SHALL BE TAKEN FROM A SERVICE REQUIRING BACKFLOW PREVENTION UNTIL THE ASSEMBLY HAS BEEN SUCCESSFULLY TESTED BY LVVWD. ANY BLOCK WALL OR OTHER FENCE MATERIAL SHALL BE DESIGNED AND CONSTRUCTED AROUND THE OUTSIDE OF THE EASEMENT(S) SO AS TO ALLOW LVVWD DIRECT ACCESS FROM THE ADJACENT RIGHT-OF-WAY. EASEMENTS SHALL BE CLEARLY MAKRED OR STAKED PRIOR TO THE START OF CONSTRUCTION.

SEWER CONNECTION NOTE

ONE OR MORE SEGMENTS OF THE DOWNSTREAM SEWER SYSTEM THAT WILL SERVE THIS PROJECT HAS NOT BEEN COMPLETED AND/OR ACCEPTED FOR MAINTENANCE BY THE CITY OF LAS VEGAS. ANY WORK DONE ON THIS PROJECT PRIOR TO THE COMPLETION AND/OR ACCEPTANCE OF THE DOWNSTREAM SEWER SYSTEMS(S) SHALL BE DONE AT THE DEVELOPER'S OWN RISK. THE CITY OF LAS VEGAS RESERVES THE RIGHT TO PREVENT THE PHYSICAL CONNECTION OF THIS PROJECT INTO THE DOWNSTREAM SEWER SYSTEM UNTIL ALL SEGMENTS HAVE BEEN COMPLETED AND ACCEPTED FOR MAINTENANCE, OR UNTIL SUCH TIME AS THEY ARE DEEMED AVAILABLE FOR SERVICE.

SECTION 12 L L C
APN:126-12-000-001
ZONING CLASSIFICATION: T-D (T-D)
DOC#20131107000030 68

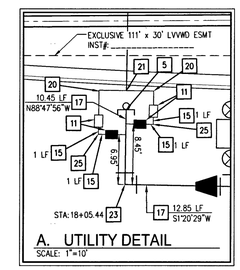

A. UTILITY DETAIL
SCALE: 1"=10'

WATER NOTES

1. INSTALL 8" 5' BEND PER UDACS PLATE NO. 31
2. NOT USED
3. INSTALL 8" X 8" TEE PER UDACS PLATE NO. 31
4. INSTALL 8" 90° BEND PER UDACS PLATE NO. 31
5. INSTALL 6" CAP PER UDACS PLATE NO. 31
6. INSTALL 8" GATE VALVE PER UDACS PLATE NO. 30 AND 39
7. INSTALL 8" X 6" REDUCER PER UDACS PLATE NO. 30
8. INSTALL 8" PVC WATER PIPE
9. FIRE HYDRANT ASSEMBLY W/6" GATE VALVE PER UDACS PLATE NO. 40
10. INSTALL 8" WATTS SERIES 909 REDUCED PRESSURE DETECTOR ASSEMBLY
11. INSTALL 2" COPPER SERVICE WITH 2" METER AND 2" RPPA PER UDACS PLATE NO. 4 AND 8
12. NOT USED
13. NOT USED
14. INSTALL 3" CAP WITH BLOWOFF PER UDACS PLATE NO. 36
15. INSTALL 2" BRASS WATER PIPE
16. INSTALL 3" PVC WATER PIPE
17. INSTALL 6" PVC WATER PIPE
18. 10" GATE VALVE PER UDACS PLATE NO. 30 AND 39
19. INSTALL 1" COPPER SERVICE WITH 1" RPPA FOR LANDSCAPE IRRIGATION PER UDACS PLATE NO. 4 AND 8 (PRIVATE)
20. INSTALL 3" 90° BEND PER UDACS PLATE NO. 31
21. INSTALL 3" X 3" TEE PER UDACS PLATE NO. 31
22. INSTALL 8" X 6" TEE PER UDACS PLATE NO. 31
23. INSTALL 6" 90° BEND PER UDACS PLATE NO. 31
24. INSTALL 6" GATE VALVE PER UDACS PLATE NO. 30 AND 39
25. INSTALL 2" BRASS 90° BEND
26. INSTALL 8" 45° BEND PER UDACS PLATE NO. 31
27. REMOVE EX CAP AND CONNECT WITH A 90° BEND PER UDACS PLATE #31

SEE SHEET C-2 FOR LEGEND, ABBREVIATIONS AND QUANTITIES

SEWER NOTES

1. INSTALL SANITARY SEWER CLEANOUT, SIZE PER PLAN, PER TRAFFIC RATED DCSWCS DWG NO. SD-26
2. INSTALL 6" PVC SS PER DCSWCS SD-15 AND SD-17
3. INSTALL 8" PVC SS PER DCSWCS SD-15 AND SD-17
4. REMOVE PLUG & CONNECT TO EXISTING SANITARY SEWER
5. SEE ARCHITECTURAL PLANS FOR CONNECTION
6. GREASE INTERCEPTOR, PER PLUMBING PLANS
7. INSTALL 6"X6" WYE SEWER CONNECTION PER SD-22 & SD-23

SEE SHEET C-2 FOR LEGEND, ABBREVIATIONS AND QUANTITIES

APPROVED FOR CONSTRUCTION
LAS VEGAS VALLEY WATER DISTRICT ENGINEERING SERVICES
PROJECT No. 125227 FIRST APPROVED DATE: 11/14/17
LVVWD APPROVED FIRE FLOW 2,875 GPM AT 20 PSI RESIDUAL

APPROVAL

LAS VEGAS FIRE AND RESCUE 11/8/17 DATE

BENCHMARK

USDA BRASS CAP ON AN IRON PIPE, 140' SOUTHWEST OF TELEPHONE POLE #269941, SOUTHWEST CORNER OF THE U.S. 95/KYLE CANYON TURNOFF.

ELEVATION = 2817.62 FEET, 858.813 METERS
N.A.V.D. 88
PER THE CLARK COUNTY VERTICAL CONTROL LAST REVISED 2003

FIRE FLOW CALCULATIONS

TOTAL FIRE FLOW 2,875 GPM AT 20 P.S.I. RESIDUAL.
ON SITE FIRE FLOW 2,875 GPM
ON SITE SPRINKLER 1,500 GPM

USE/OCCUPANCY	SINGLE FAMILY
TYPE OF CONSTRUCTION (IBC)	TYPE V-B
SQUARE FOOTAGE	47,365 SF
LARGEST AREA BETWEEN 4 HOUR WALLS	N/A
BUILDING HEIGHT	35'-2"
NO OF STORIES INCLUDING BASEMENT	2
FIRE SPRINKLER	YES
NO OF HYDRANTS INSTALLED	4

BASIS OF BEARINGS

THE BASIS OF BEARING IS SOUTH 00°22'12" WEST, BEING THE BEARING OF THE WEST LINE OF THE NORTHWEST QUARTER (NW1/4) OF SECTION 6, TOWNSHIP 19 SOUTH, RANGE 60 EAST, M.D.M., CITY OF LAS VEGAS, CLARK COUNTY, NEAVAD, AS SHOWN BY MAP THEREOF IN FILE 151, PAGE 14 OF SURVEYS IN THE CLARK COUNTY RECORDER'S OFFICE, NEVADA.

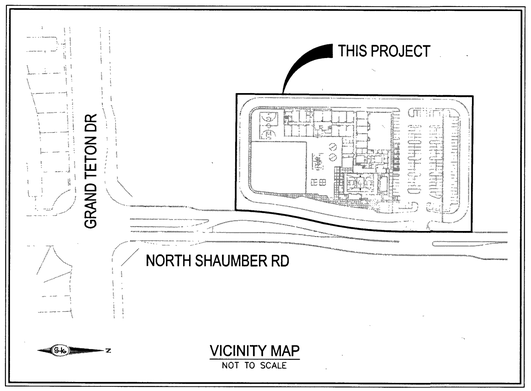

VICINITY MAP
NOT TO SCALE

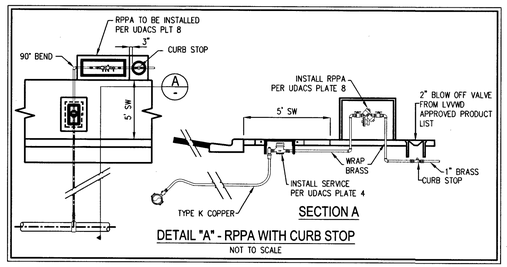

DETAIL "A" - RPPA WITH CURB STOP
NOT TO SCALE

WATER NOTES

1. WATER MAIN JOINT DEFLECTION (PVC, 3" - 23")
   PVC PIPE SHALL BE DEFLECTED AT THE JOINT ONLY. THE MAXIMUM ALLOWABLE DEFLECTION SHALL BE ONE (1) DEGREE PER JOINT WITH A MINIMUM RADIUS OF CURVATURE OF 1,150 FEET, PER UDACS 2.07.01 AND 2.07.02.
   FOR CHANGES IN DIRECTION EXCEEDING THE MAXIMUM ALLOWABLE JOINT DEFLECTION, FITTINGS SHALL BE USED.
2. ALL SEWER/ STORM DRAINS CROSSING WATER LINES MUST CONFORM TO SECTION 2.22 OF THE UNIFORM DESIGN AND CONSTRUCTION STANDARDS FOR POTABLE WATER SYSTEMS (UDACS) FOR WATER AND STORM MAIN CROSSINGS AND CLEARANCES.
3. FITTINGS SHALL NOT FALL UNDER CURBS, GUTTERS OR SIDEWALK.
4. INSTALL PIPELINE MARKER BALLS IN TRENCH ABOVE EACH HORIZONTAL ELBOW FITTING PER UDACS PLATE NO. 15.
5. THE LVVWD CANNOT GUARANTEE A WATERTIGHT SHUTDOWN WHERE CONNECTIONS OR REPAIRS TO EXISTING FACILITIES ARE REQUIRED. THE CONTRACTOR SHALL ENSURE ALL LABOR AND EQUIPMENT IS AVAILABLE TO REMOVE FUGITIVE WATER THAT MAY IMPEDE CONSTRUCTION AT ALL TIMES. COORDINATION WITH INSPECTION DIVISION MUST TAKE PLACE PRIOR TO ANY TRIAL SHUTDOWN.
6. DISCLAIMER: EXISTING UTILITY LOCATIONS SHOWN HEREON ARE APPROXIMATE ONLY. IT SHALL BE THE CONTRACTOR'S RESPONSIBILITY TO DETERMINE THE EXACT VERTICAL AND HORIZONTAL LOCATION OF ALL EXISTING UNDERGROUND UTILITIES PRIOR TO COMMENCING CONSTRUCTION. NO REPRESENTATION IS MADE THAT ALL EXISTING UTILITIES ARE SHOWN HEREON. THE ENGINEER ASSUMES NO RESPONSIBILITY FOR UTILITIES NOT SHOWN IN THEIR PROPER LOCATION.
7. ALL ABOVE GROUND OBSTRUCTIONS INCLUDING BUT NOT LIMITED TO LANDSCAPE BOULDERS, FENCES/WALLS, AND SIGNS ARE STRICTLY PROHIBITED WITHIN EASEMENT.

FAST
Call before you UnderGround
1-702-432-5300
FREEWAY & ARTERIAL SYSTEM OF TRANSPORTATION (F.A.S.T)

AVOID HITTING OVERHEAD POWER LINES. IT'S COSTLY.
CALL BEFORE YOU DO OVERHEAD
1-702-227-2929

Call before you Dig
AVOID CUTTING UNDERGROUND UTILITY LINES. IT'S COSTLY.
Call 811 OR
1-800-227-2600

SLATER HANIFAN GROUP
CONSULTING ENGINEERS & PLANNERS
5740 S. ARVILLE STREET #216, LAS VEGAS, NV 89118
PHONE (702) 284-5300 FAX (702) 284-5399

NO.	DESCRIPTION	DATE	BY	APP. DATE	APP.

CITY OF LAS VEGAS

ETHOS THREE ARCHITECTURE

SKYE CANYON SOMERSET ACADEMY
UTILITY PLAN

S12 T19S R59E

DATE: 11/1/17
DRAFTER: DNP
DESIGNER: BCC
CHECKED: STS

PROJECT NO. ETA1601-000

PROFESSIONAL ENGINEER - STATE OF NEVADA
JERRY L. HAFER
Exp. 06/30/2018
No. 14167
CIVIL
11-1-17

U-1
SHEET 14 OF 15
HANSEN NO. 68370
DWG NO. 715-196

PROJ.#:125227 AGR:116208 QS:126-12-SW

z:\eta1601-000 skye canyon academy\dwg\improv\eta1601-000u1.dwg 11/1/2017 3:23 PM Dominic Panattoni

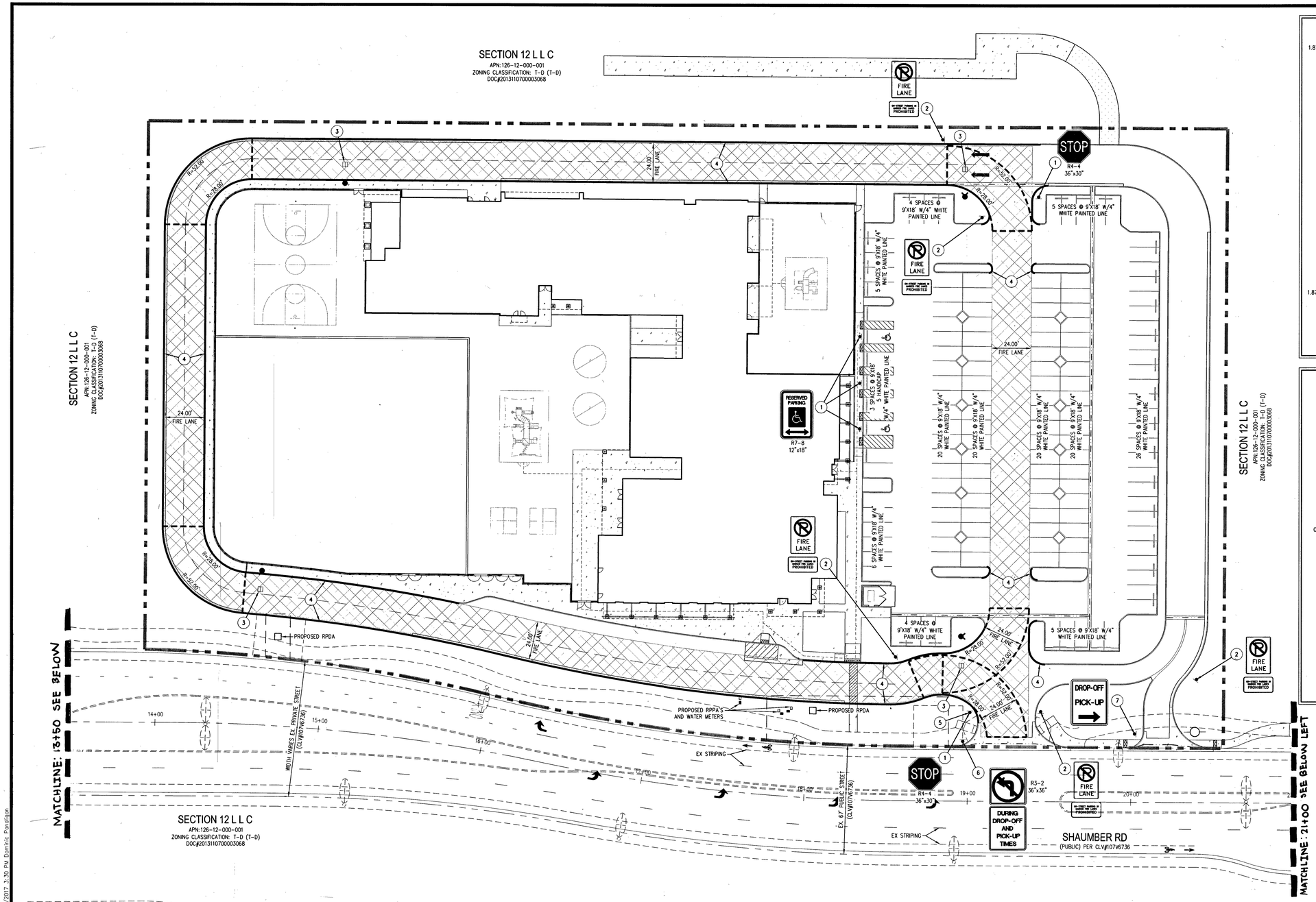

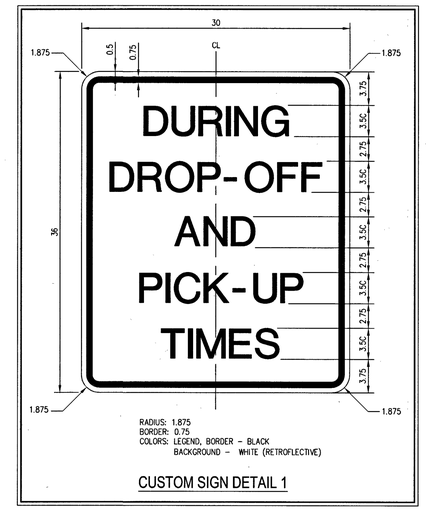

CUSTOM SIGN DETAIL 1

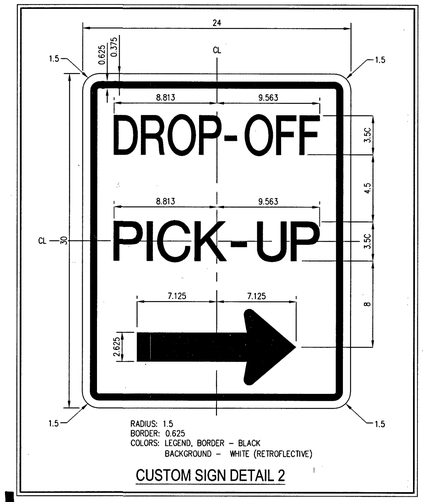

CUSTOM SIGN DETAIL 2

TRAFFIC LEGEND

- PROPOSED FIRE ACCESS LANE
- FIRE MIN/MAX TURNING RADIUS
- PROPOSED PAINTED CURB IN FIRE LANE
- PROPOSED SIGNAGE
- FIRE HYDRANT REFLECTIVE MARKER

TRAFFIC NOTES

1. INSTALL NEW SIGN(S) (GROUND MOUNTED)
2. FIRE & RESCUE SIGNAGE AT ENTRY PER CLV ORDINANCE #6325
3. INSTALL FIRE HYDRANT MAKER PER CITY OF LAS VEGAS FIRE CODE
4. RED PAINTED CURB WITH "NO PARKING IN FIRE LANE" IN PAINTED WHITE LETTERS PER CLV ORDINANCE #6325
5. TWO 9" STREET NAME SIGNS (D-3, BROWN W WHITE LETTERS)
6. INSTALL "NO LEFT TURN SIGN" (R3-2) AND "DURING DROP-OFF AND PICK-UP TIMES" CUSTOM SIGN PER CUSTOM SIGN DETAIL 1 ON THIS SHEET
7. INSTALL CUSTOM "DROP-OFF AND PICK-UP" SIGN PER CUSTOM DETAIL 2 ON THIS SHEET

TRAFFIC GENERAL NOTES

1. REPLACE ALL TRAFFIC CONTROL DEVICES (SIGNS AND/OR PAVEMENT MARKINGS), UNDER CLARK COUNTY'S JURISDICTION, THAT ARE DISTURBED, DESTROYED, MOVED OR MODIFIED BY TRENCHING ACTIVITIES TO CLARK COUNTY'S SATISFACTION. ALL MATERIAL USED SHALL MEET CLARK COUNTY'S SPECIFICATIONS OR WILL WILL BE AN APPROVED EQUIVALENT.

2. IN THE EVENT THAT THE TRAFFIC SIGNAL CONDUITS, LOOP DETECTORS OR ASSOCIATED EQUIPMENT ARE DAMAGED BY CONTRACTOR, THE CONTRACTOR WILL HIRE AN IMSA LEVEL II ELECTRICAL CONTRACTOR TO MAKE REPAIRS PER UNIFORM SPECIFICATION NO. 623.G.01.02

3. ALL SEWER/ STORM DRAINS CROSSING WATER LINES MUST CONFORM TO SECTION 2.22 OF THE UNIFORM DESIGN AND CONSTRUCTION STANDARDS FOR POTABLE WATER SYSTEMS (UDACS) FOR WATER AND STORM MAIN CROSSINGS AND CLEARANCES.

4. THE CONTRACTOR IS TO VERIFY THE ACTUAL FIELD CONDITIONS OF ALL LOTS AND INSTALL SEWER CHECK VALVES WHERE REQUIRED PER THE LATEST EDITION OF THE UNIFORM PLUMBING CODE.

5. FITTINGS SHALL NOT FALL UNDER CURBS, GUTTERS OR SIDEWALK.

PARKING

SPACES PROVIDED	133
A.D.A ACCESSIBLE PROVIDED	5

BENCHMARK

USDA BRASS CAP ON AN IRON PIPE, 140' SOUTHWEST OF TELEPHONE POLE #269941, SOUTHWEST CORNER OF THE U.S. 95/KYLE CANYON TURNOFF.

ELEVATION = 2817.62 FEET, 858.813 METERS
N.A.V.D. 88
PER THE CLARK COUNTY VERTICAL CONTROL LAST REVISED 2003

BASIS OF BEARINGS

THE BASIS OF BEARING IS SOUTH 00°22'12" WEST, BEING THE BEARING OF THE WEST LINE OF THE NORTHWEST QUARTER (NW1/4) OF SECTION 6, TOWNSHIP 19 SOUTH, RANGE 60 EAST, M.D.M., CITY OF LAS VEGAS, CLARK COUNTY, NEAVAD, AS SHOWN BY MAP THEREOF IN FILE 151, PAGE 14 OF SURVEYS IN THE CLARK COUNTY RECORDER'S OFFICE, NEVADA.

APPROVAL

LAS VEGAS FIRE AND RESCUE — DATE 11/8/17

FAST
Call before you UnderGround
1-702-432-5300
FREEWAY & ARTERIAL SYSTEM OF TRANSPORTATION (F.A.S.T)

AVOID HITTING OVERHEAD POWER LINES. IT'S COSTLY.
CALL BEFORE YOU DO OVERHEAD
1-702-227-2929

Call before you Dig
AVOID CUTTING UNDERGROUND UTILITY LINES. IT'S COSTLY.
Call 811 OR
1-800-227-2600

SCALE - 1"=30' (0, 30, 60 FEET)

SLATER HANIFAN GROUP
CONSULTING ENGINEERS & PLANNERS
5740 S. ARVILLE STREET #216, LAS VEGAS, NV 89118
PHONE (702) 284-5300 FAX (702) 284-5399

NO.	DESCRIPTION	DATE	BY	APP DATE	APP

CITY OF LAS VEGAS

ETHOS THREE ARCHITECTURE
SKYE CANYON SOMERSET ACADEMY
TRAFFIC PLAN

S12 T19S R59E

DATE: 11/01/17
DRAFTER: DNP
DESIGNER: BCC
CHECKED: STS

PROJECT NO. ETA1601-000

PROFESSIONAL ENGINEER - STATE OF NEVADA — JERRY SLATER — Exp 06/30/2018 — CIVIL — No. 14167 — 11.1.17

T-1
SHEET 15 OF 15

HANSEN NO. 68370
DWG NO. 715-146

k:\eta1601-000 skye canyon academy\dwg\neprov\eta1601-000tif.dwg 11/1/2017 3:32 PM Dominic Pandigan