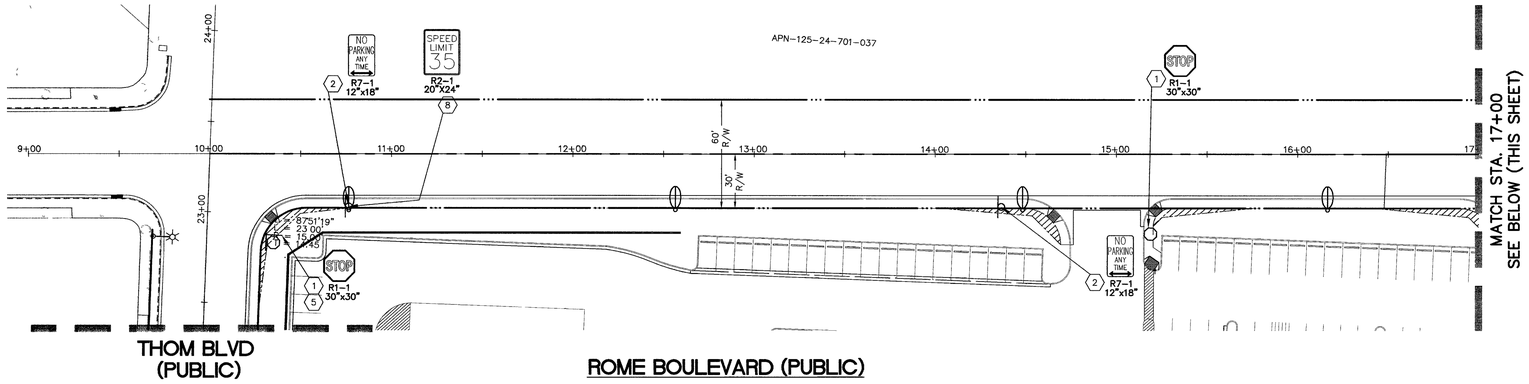


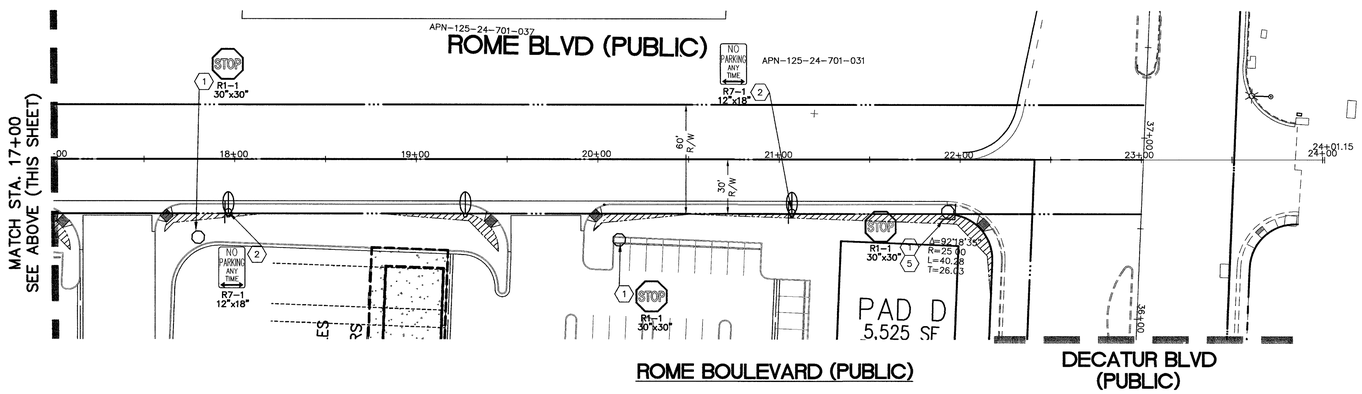


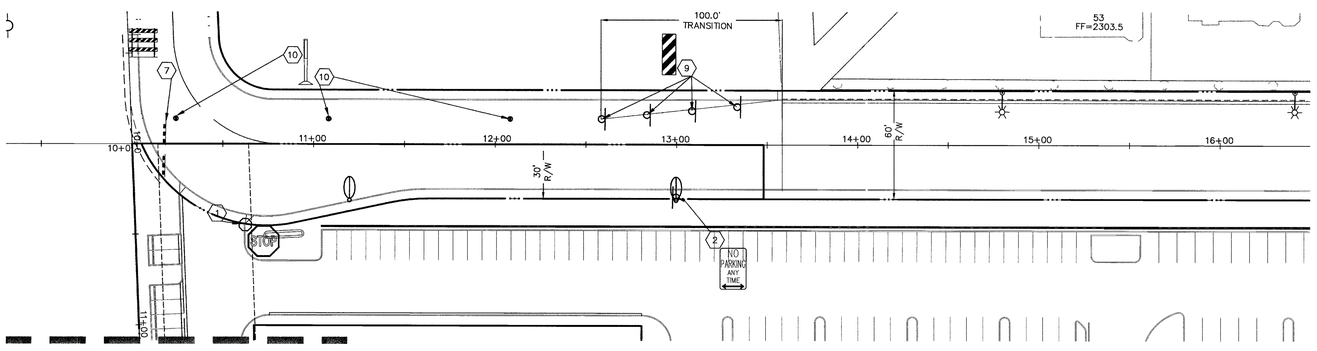


NORTH
SCALE 1"=40'
40 0 40 80
SCALE FEET

NORTH
SCALE 1"=40'
40 0 40 80
SCALE FEET

NORTH
SCALE 1"=40'
40 0 40 80
SCALE FEET

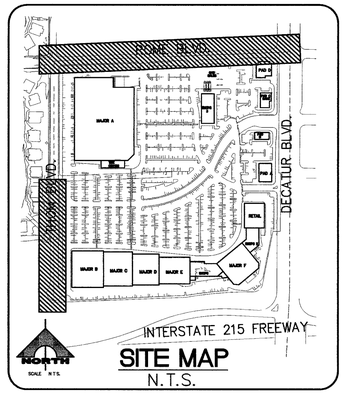


## SITE MAP
N.T.S.

## SIGHT VISIBILITY RESTRICTION ZONE

## SIGNING NOTES

1. INSTALL 30"X30" R1-1 (STOP SIGN)
2. INSTALL 12"X18" R7-1 (NO PARKING ANY TIME SIGN)
3. NOT USED
4. NOT USED
5. INSTALL STREET NAME SIGN PER C.C.A.U.S.D. NO. 250
6. NOT USED
7. INSTALL TYPE IIIA BARRICADE
8. INSTALL 20"X24" R2-1 (SPEED LIMIT SIGN)
9. INSTALL 30' ON CENTER OM-3R
10. INSTALL TEMPORARY EPOXY DELINEATORS (FOR EDGE OF PAVEMENT)

AVOID HITTING OVERHEAD POWER LINES. IT'S COSTLY
CALL BEFORE YOU DO OVERHEAD
1-702-227-2929

Avoid cutting underground utility lines. It's costly.
Call before you Dig.
1-800-227-2600
UNDERGROUND SERVICE (USA)

AVOID HITTING UNDERGROUND ELECTRIC, SIGNAL, CATV, TELEPHONE AND STREET LIGHTING CIRCUITS
IT'S COSTLY
CALL BEFORE YOU DO UNDERGROUND
Call before you UnderGround
1-702-455-7511
CLARK COUNTY TRAFFIC ENGINEERING
1-702-229-6611
LAS VEGAS AREA COMPUTERIZED TRAFFIC SYSTEM

## BASIS OF BEARINGS

SOUTH 00°46'17" EAST, BEING THE BEARING OF THE CENTERLINE OF DECATUR BOULEVARD BETWEEN CENTENNIAL PARKWAY AND DEER SPRINGS WAY AS SHOWN BY MAP THEREOF ON FILE IN FILE 52, PAGE 70 OF SURVEYS IN THE COUNTY RECORDER'S OFFICE, CLARK COUNTY, NEVADA

## BENCHMARK

CITY OF LAS VEGAS BENCHMARK OLV90 25N6
RIVET AND ROUND PLATE IN TOP OF CURB, SOUTHWEST CORNER OF BRADLEY ROAD AND AZURE AVE. NEAR THE POINT OF BRADLEY ROAD

ELEVATION 700.832 METERS 2299.313 FEET

STATE OF NEVADA PROFESSIONAL ENGINEER - STATE OF NEVADA DEBRA M. YAMACHIKA Exp. 4/30/06 CIVIL No. 15998
DATE 3-16-05

| REV | DATE | DESCRIPTION | DATE AGEN. APP | DATE GOV. APP |
|---|---|---|---|---|

DESIGN:
DRAWN:
CHECK:
ISSUE DATE:
ISSUE EDITOR:
PLOT DATE: 03-15-05
PLOT TIME: 20:35:51

G. C. WALLACE, INC.
Engineers/Planners/Surveyors
1555 SOUTH RAINBOW BLVD./LAS VEGAS, NEVADA 89146
TELEPHONE: (702) 804-2000 • FAX: (702) 804-2299
F:\398-976\dwg\improv\SHAD028.dwg

SHADOW MOUNTAIN MARKETPLACE, L.L.C.

# SHADOW MOUNTAIN MARKETPLACE

## TRAFFIC AND STRIPING PLAN ROME AND THOM BOULEVARDS

DRAWING
C-28
28 OF 32 SHTS

78185

1074486