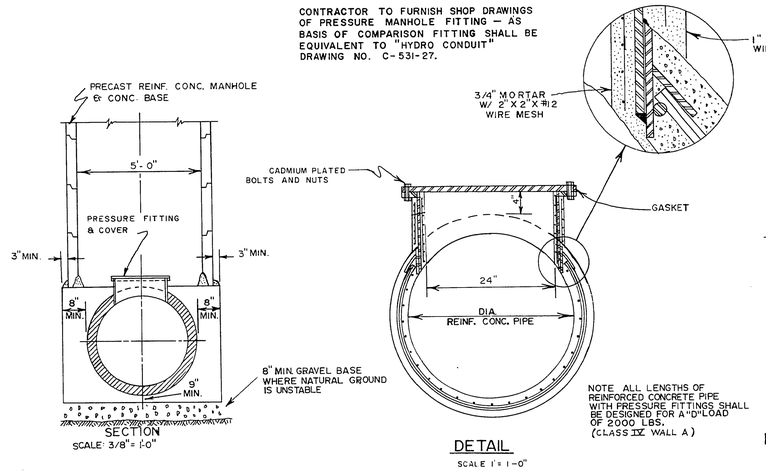

PRECAST CONCRETE MANHOLE WITH PRESSURE FITTING

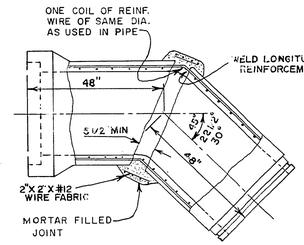

TYPICAL DETAIL BEND FOR REINFORCED CONCRETE
NO SCALE

ORDINARY METHOD – BOTTOM SHAPED FOR PIPE – ADDITIONAL EXCAV. FOR BELLS

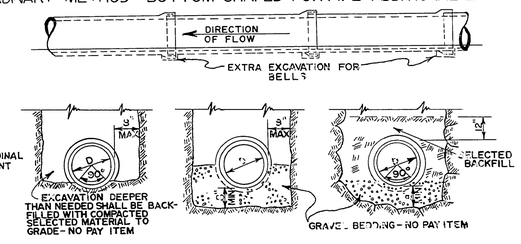

PIPE LAYING
NO SCALE

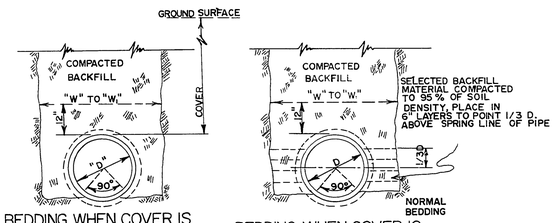

PIPE BEDDING
NO SCALE

TRENCH WIDTHS

PIPE SIZE INCHES	MAX. TRENCH WIDTH INCHES "W"	MIN TRENCH WIDTH INCHES "W"
33"	60"	54"
42"	72"	66"
45"	76"	69"
51"	81"	75"

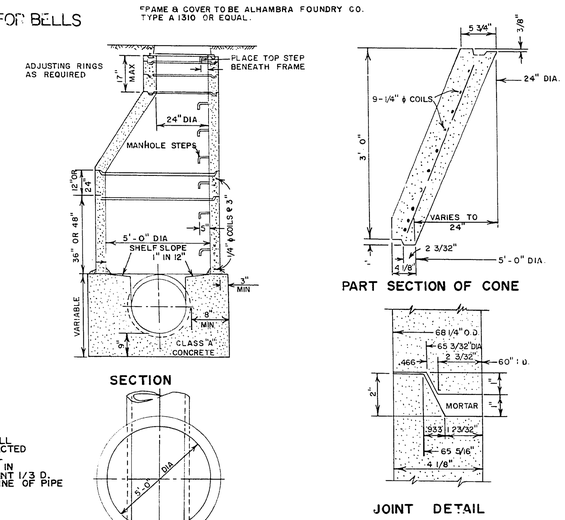

5' CONCRETE SEWER MANHOLE
NO SCALE

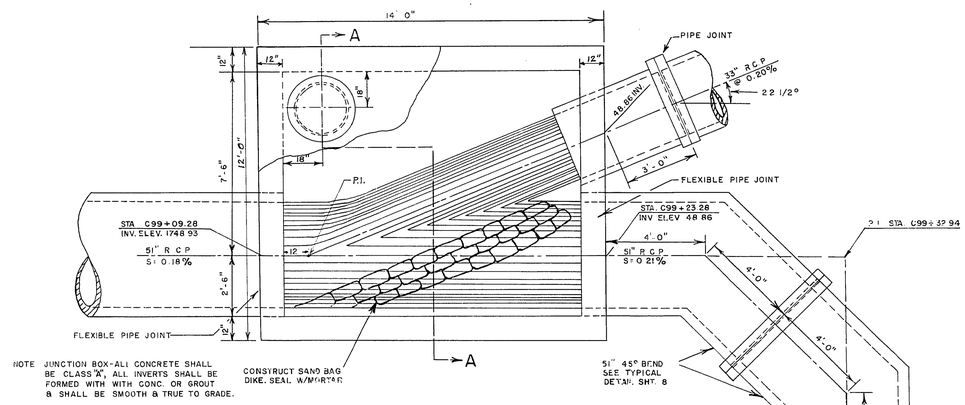

PLAN JUNCTION BOX NO 1 - STA C99+09.28
SCALE 3/8" = 1'-0"

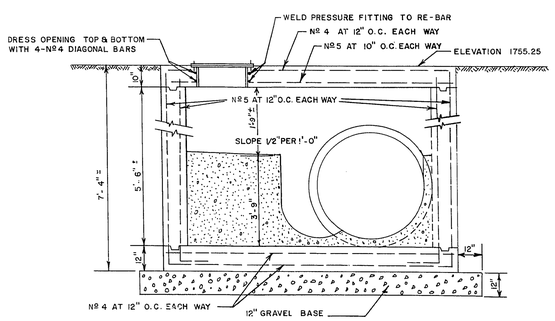

SECTION A-A
NO SCALE

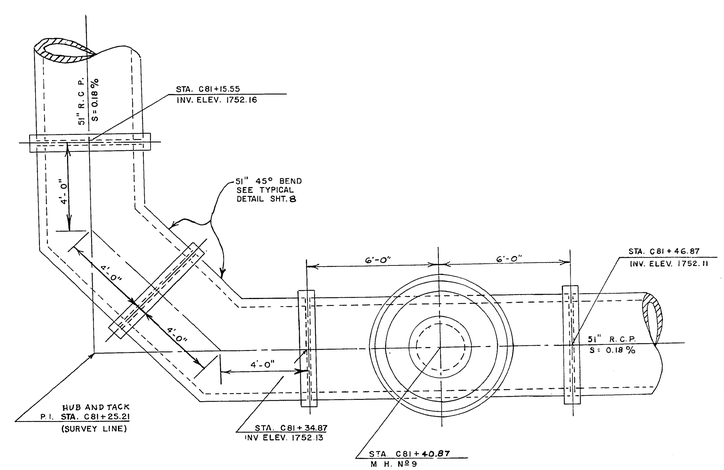

DETAIL FROM STA. C81+15.55 TO STA. C81+42.87
NO SCALE

CONTRACT DRAWING

CERTIFY THAT THIS PLAN WAS THE ISSUED CONTRACT SET ...
DATE 23 MAR 72

BID NO. 72.63 ~~72-13~~ CONTRACT NO 963 ~~913~~

CITY OF LAS VEGAS NEVADA
DEPARTMENT OF PUBLIC WORKS
SERVICES DIVISION

SANDHILL INTERCEPTOR
WASHINGTON (ON SANDHILL) TO CHARLESTON (1/5 MILE WEST OF LAMB)

W.O. NO. 3170	F.BK. NO. 70-3X	DATE	DRAWING NO.
SC. (H) AS SHOWN	SC. (V)		
DES. DAVE McGONEGLE			
DR. L. BRADFORD – S. ARNAUD		3-7-72	FILE NO.
APPROVED BY DIRECTOR OF PUBLIC WORKS		3-24-72	307-V445
			SHEET 8 OF 10

20-1-47