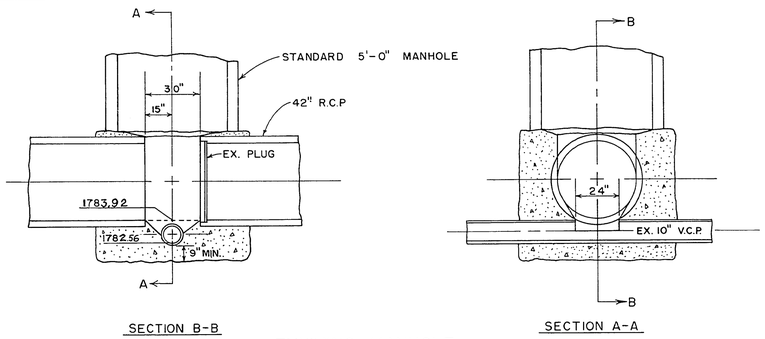

EXISTING MANHOLE
STA. 25+86.21
SCALE: 1" = 3'

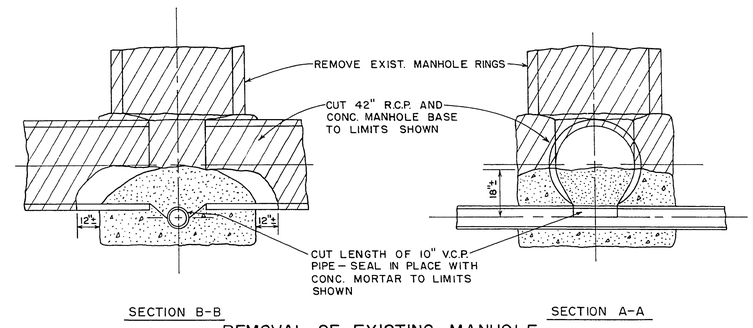

REMOVAL OF EXISTING MANHOLE
STA. 25+86.21
SCALE: 1" = 3'

APPROXIMATE QUANTITIES - THIS SHEET

ITEM	DESCRIPTION	UNIT	QUANTITY
121 242C	42" R.C.P.	L.F.	94
121 245C	45" R.C.P.	L.F.	542
121 424T	42" R.C.P. 30° BEND 4 X 4	EA	1
121 426T	42" R.C.P. 30° BEND 4 X 6	EA.	1
121 422B	42" R.C.P. 22 1/2° BEND 4 X 4	EA.	2
121 945R	42" TO 45" R.C.P. INCREASER 12' LG.	EA	1
200 110M	REMOVE MANHOLE	LS	1
	MANHOLE NO. 1	LS	
	MANHOLE NO. 2	LS	

STATIONING NOTE

1. SECTION LINE SURVEY STATIONING USED TO P.C. SANDHILL ROAD, STA 93+20.57 (DWG 307-V382), WITH C.L.V. SURVEY STATIONING (PREFACED BY LTR. C) FROM F.B. 70-3X SHOWN AS REFERENCE.
2. C.L.V. SURVEY STATIONING USED FROM P.C. SANDHILL ROAD, STA 67+41.75, TO END OF PROJECT ON CHARLESTON BLVD (F.B. 70-3X)

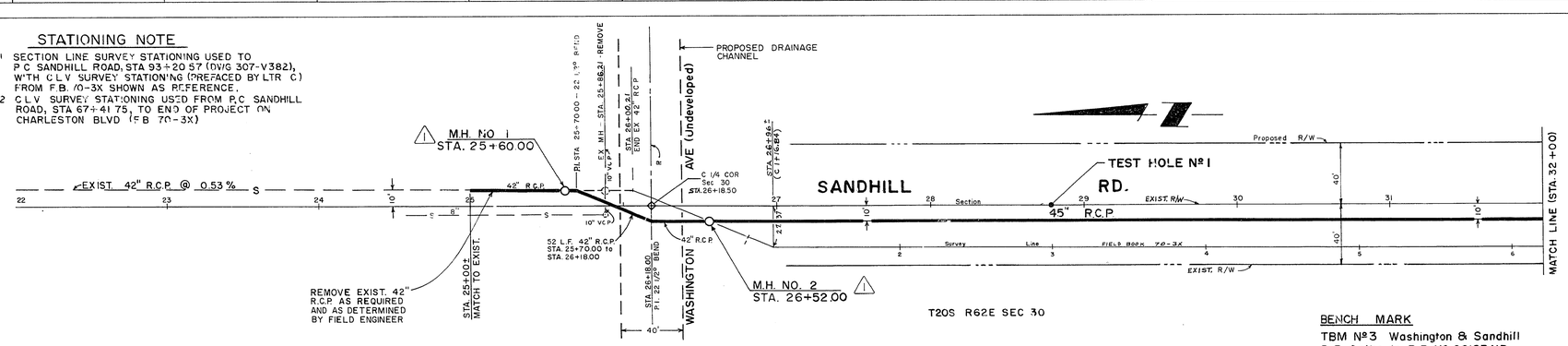

BENCH MARK
TBM Nº 3 Washington & Sandhill
R.R. Spike in P.P. Nº 60183NP
Elevation: 1794.020

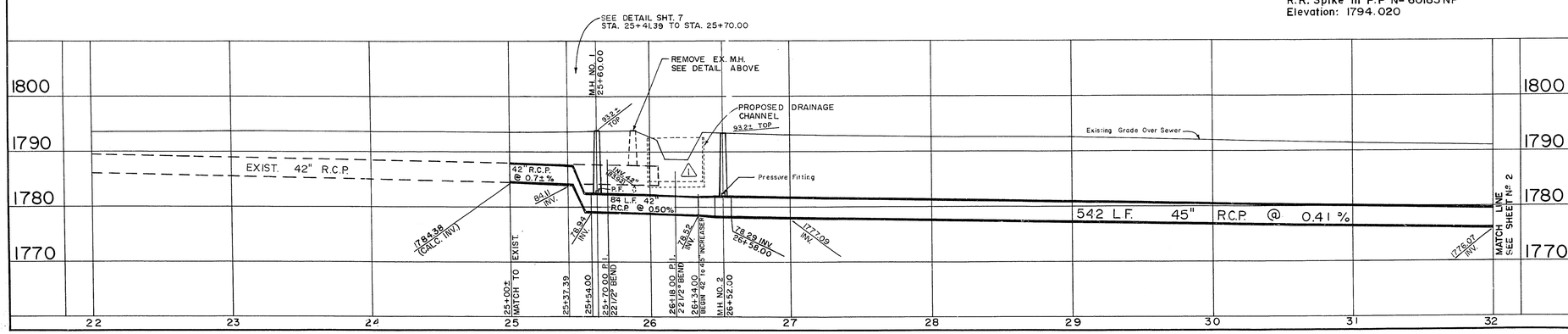

EXISTING UTILITIES ARE SHOWN ON THE PLANS FOR THE CONVENIENCE OF THE CONTRACTOR ONLY. THE CONTRACTOR SHALL BE SOLE RESPONSIBILITY FOR PROTECTING EXISTING UTILITIES AND THE CITY BEARS NO RESPONSIBILITY FOR UTILITIES NOT SHOWN ON THE PLANS OR NOT IN THE LOCATION SHOWN ON THE PLANS.

CONTRACT DRAWING
JUL 10 1972

I CERTIFY THAT THIS PLAN WAS PREPARED UNDER MY SUPERVISION.
DATE 23 MAR 72

BID NO 72.63 ~~72.13~~ CONTRACT NO. 963 ~~913~~

NO.	DESCRIPTION	BY	DATE	APPROVAL
1	CHANGE QUANTITIES 42" & 45" R.C.P. CHANGE STATIONING M.H. 1 & 2 CHANGE GRADES	M.G.	8-3-72	

REVISIONS

CITY OF LAS VEGAS NEVADA
DEPARTMENT OF PUBLIC WORKS
SERVICES DIVISION

SANDHILL INTERCEPTOR
WASHINGTON (ON SANDHILL) TO CHARLESTON (1/5 MILE WEST OF LAMB)

W.O. NO. 3170	F.BK. NO. 70-3X	DATE	DRAWING NO.
SC. (H) 1" = 40'	SC. (V) 1" = 10'		
DES. Dave McGonegle			
DR. Mark Garland		3-7-72	FILE NO. 307-V445
APPROVED BY DIRECTOR OF PUBLIC WORKS		3-24-72	SHEET 1 OF 10

70-1-90