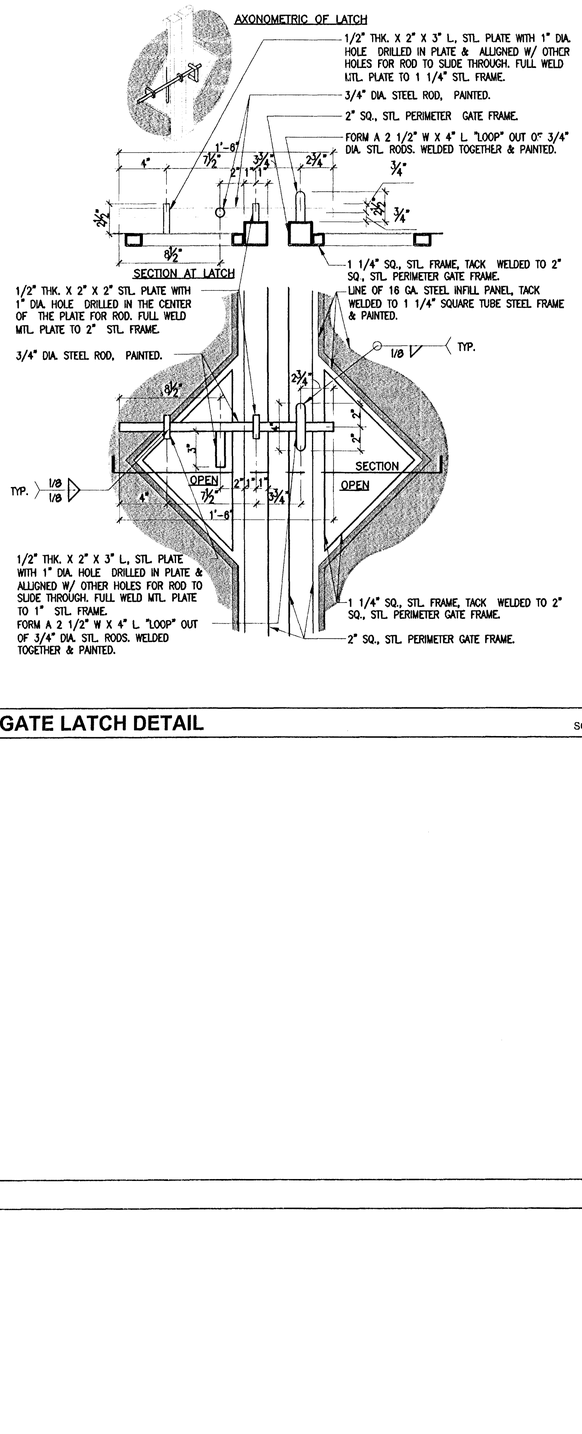

5 TRASH ENCLOSURE GATE LATCH DETAIL

SCALE: 1" = 6"

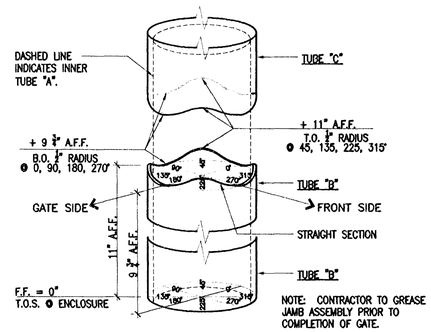

3 TUBE "B" AXONOMETRIC

SCALE: 1" = 6"

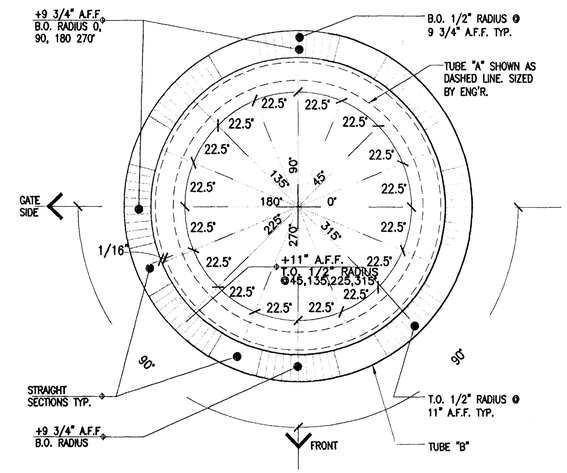

1 TUBE "B" PLAN (CLOSED POSITION)

SCALE: 1" = 1"

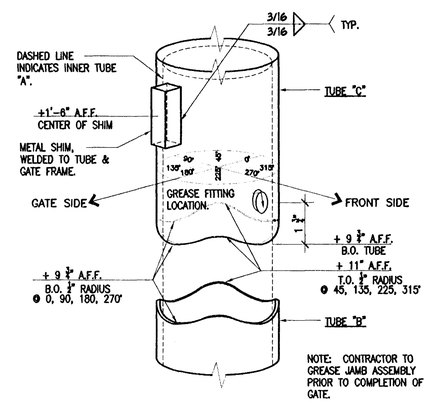

4 TUBE "C" AXONOMETRIC

SCALE: 1" = 3"

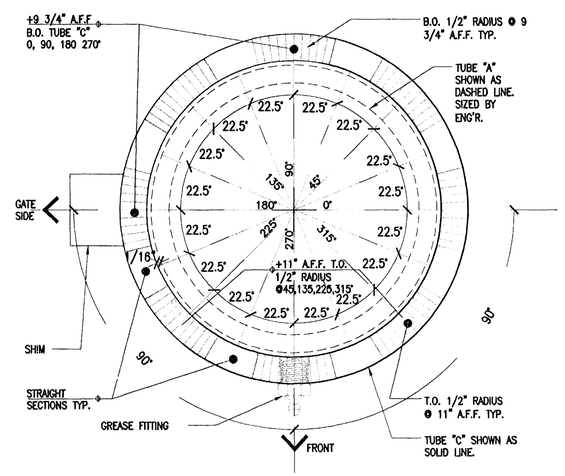

2 TUBE "C" PLAN VIEW

SCALE: 1" = 1"

100% SUBMITTAL

WRIGHT engineers

7425 PEAK DRIVE LAS VEGAS, NEVADA 89128
p 702.933.7000 f 702.933.7001 800.933.7611
WRIGHTENGINEERS.COM
LAS VEGAS :: IRVINE :: PHOENIX :: SALT LAKE

CITY OF LAS VEGAS NEVADA

REVISIONS

CONSULTANT

Cardno WRG
LAS VEGAS
10649 JEFFREYS ST., HENDERSON, NV 89052
TEL: (702) 990-5300 FAX: (702) 990-5305
WWW.CARDNOWRG.COM
PLANNERS • ENGINEERS • LANDSCAPE ARCHITECTS • SURVEYORS

SANDHILL QUENS PARK & TRAILHEAD
LAS VEGAS, NEVADA
FOUNDATION DETAILS

STAMP

STATE OF NEVADA PROFESSIONAL ENGINEER MARK DAVID ROWE EDC-12-51-40 NEVADA No. 17124 DEC 08 2009

OWNER: CITY OF LAS VEGAS
DEPARTMENT OF PUBLIC WORKS
CAPITAL PROJECT MANAGEMENT SECTION

400 EAST STEWART AVENUE
LAS VEGAS, NEVADA 89101
PHONE: (702) 229-6535
FAX: (702) 384-4846
TDD: (702) 386-9108

DRAWN	BFS/BFS
FILE	S25-080403-0
DATE	10-15-2009
SCALE	AS NOTED
BID NO	09.1534.L11
CLV DWG NO	650.104
SHT NO	S2.5