## J-CHANNEL CORNER TRIM CONNECTION DETAILS

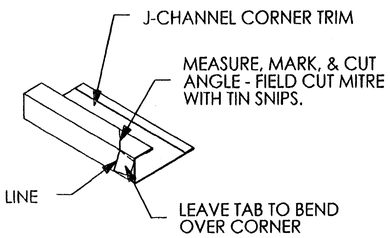


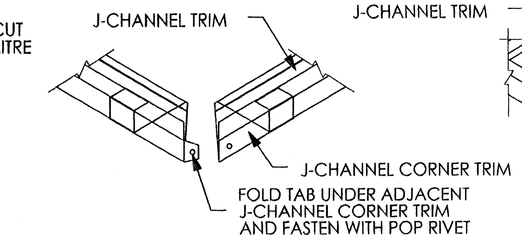


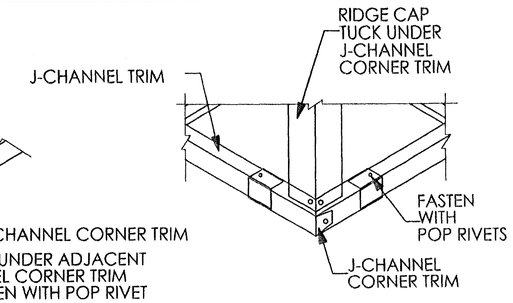


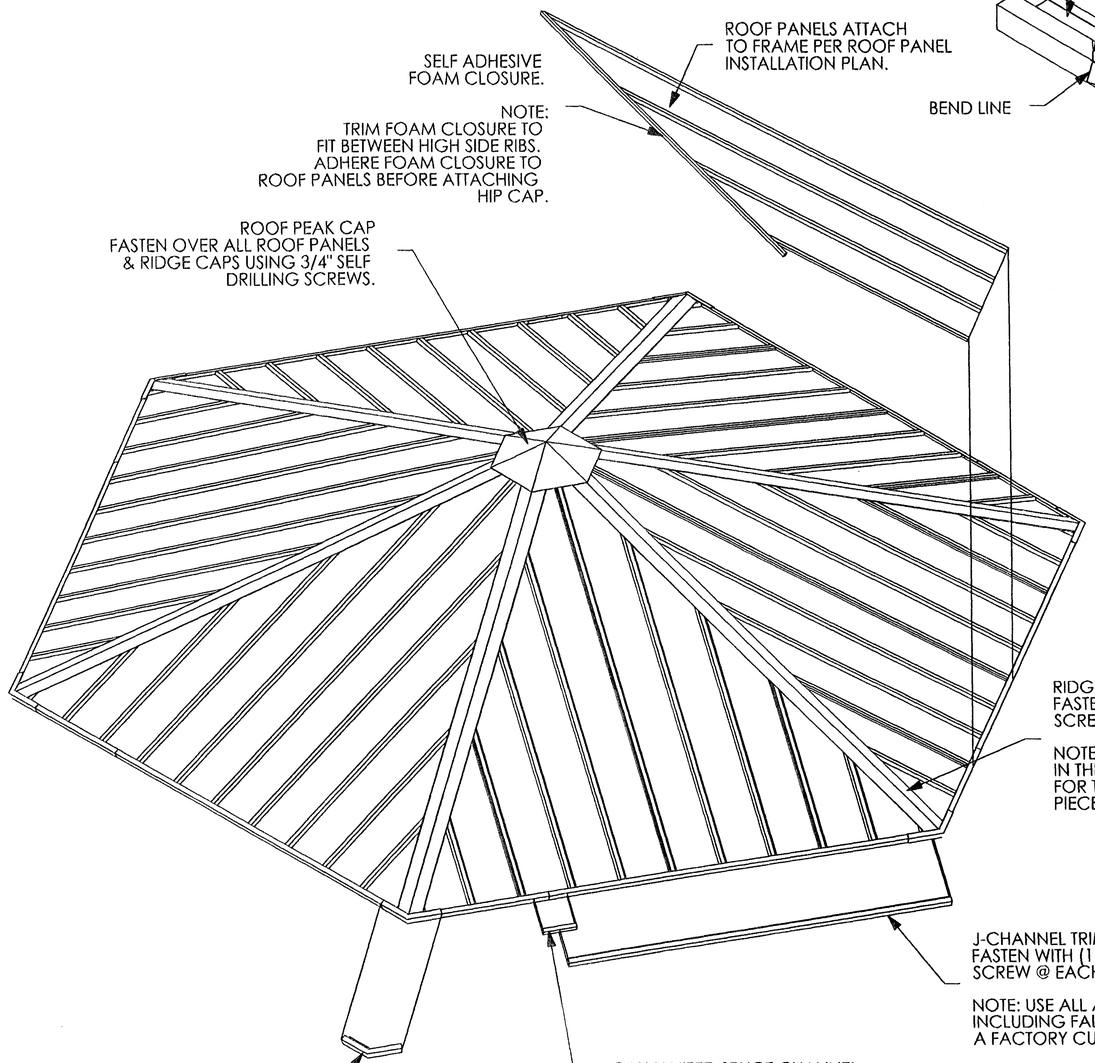


## TRIM PIECE DESCRIPTIONS

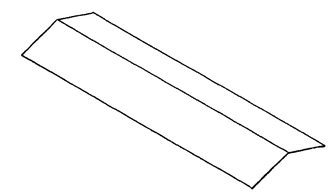

RIDGE CAP
10' LONG
COLOR ON TOP SIDE

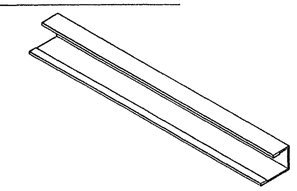

J-CHANNEL TRIM
10' LONG
COLOR ON OUTSIDE
GALVANIZED STEEL INSERT

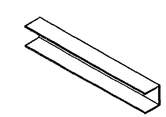

GALVANIZED SPLICE CHANNEL
8" LONG
GALVANIZED STEEL

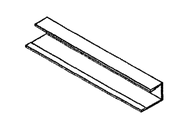

J-CHANNEL CORNER TRIM
8" LONG
COLOR ON OUTSIDE

SELF ADHESIVE
FOAM CLOSURE
13' LONG ROLL

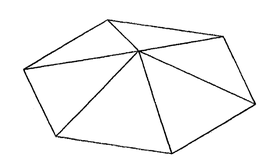

ROOF PEAK CAP
COLOR ON TOP SIDE

NOTE: REMOVE ALL PROTECTIVE PLASTIC FROM TRIM PARTS BEFORE INSTALLING.

NOTE: FOR SECTION VIEWS OF THE ROOF, REFER TO THE ROOF CONNECTION DETAIL SHEET.

123210

poligon® PARK ARCHITECTURE
800-354-7721
www.poligon.com
by PORTERCORP
PORTERCORP 4240 N. 136th AVE HOLLAND, MI 49424

PRINT DATE: 10/9/2009
DRAWN BY: briste
SCALE: 1:1
REV LEVEL: A
CREATION DATE: 5/27/2009
JOB NO: 46542
CAD MODEL: HXE-20-F1-B2-46542

PATENTED AND/OR PATENTS PENDING COPYRIGHT 2006 PORTERCORP HOLLAND, MI 49424

PROJECT: SANDHILL OWEN PARK & TRAILHEAD
PROJECT LOCATION: HENDERSON, NV 89074
DRAWING: ROOF INSTALLATION

SHEET
**PR.10**