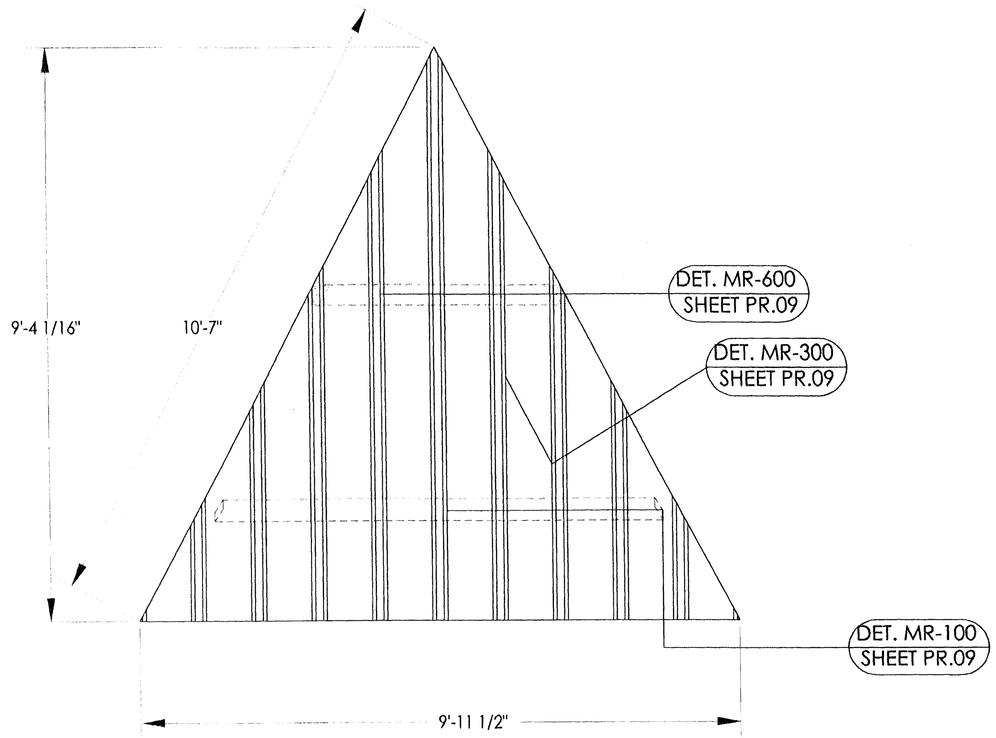

TO BEGIN: Mark the center of the compression ring and tension ring. Locate one of the longest panels with center of panel at center of frame, and work out to corners. Complete each pie in this fashion.

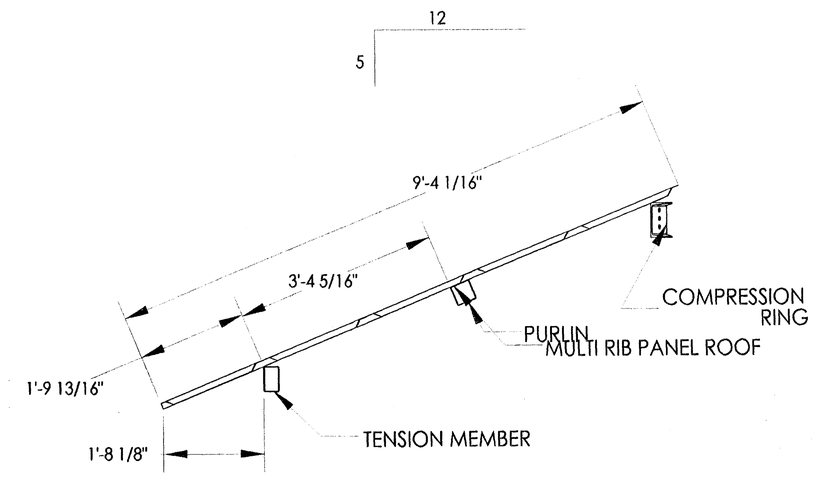


THE DETAILS SHOWN ARE SUGGESTIONS OR GUIDELINES ON HOW TO ERECT THE SYSTEMS. THE INFORMATION SHOWN IS ACCURATE, BUT IT IS NOT INTENDED TO COVER ALL INSTANCES, BUILDING REQUIREMENTS, DESIGNS OR CODES. THE DETAILS MAY REQUIRE CHANGES OR REVISIONS DUE TO FIELD CONDITIONS.

IT SHALL BE THE RESPONSIBILITY OF THE ERECTOR TO ENSURE THAT THE DETAILS MEET PARTICULAR BUILDING REQUIREMENTS AND TO ASSURE ADEQUATE WATER TIGHTNESS.

THE ERECTOR SHOULD THOROUGHLY FAMILIARIZE HIMSELF/HERSELF WITH ALL ERECTION INSTRUCTIONS BEFORE STARTING WORK.

THE PANELS SHOULD BE INSTALLED PLUMB, STRAIGHT, AND ACCURATELY TO THE ADJACENT WORK.

FLASHING AND TRIM SHALL BE INSTALLED TRUE, AND IN PROPER ALIGNMENT, WITH ANY EXPOSED FASTENERS EQUALLY SPACED FOR THE BEST APPEARANCE.

SEALANT SHALL BE FIELD APPLIED ON DRY, CLEAN SURFACES. SOME FIELD CUTTING AND FITTING OF PANELS AND FLASHING IS TO BE EXPECTED BY THE ERECTOR AND MINOR FIELD CORRECTIONS ARE A PART OF NORMAL ERECTION WORK.

WORKMANSHIP SHALL BE OF THE BEST INDUSTRY STANDARDS AND INSTALLATION SHALL BE PERFORMED BY EXPERIENCED METAL CRAFTSMEN.

Fastener Schedule
N.T.S.

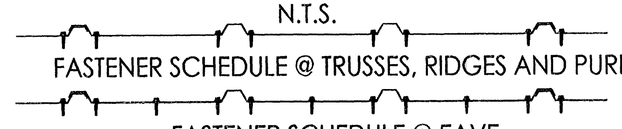

FASTENER SCHEDULE @ TRUSSES, RIDGES AND PURLINS.

FASTENER SCHEDULE @ EAVE.

THIS SEAL PERTAINS ONLY TO THE MATERIALS SUPPLIED BY POLIGON. THIS SEAL DOES NOT SERVE AS - OR REPRESENT - THE PROJECT ENGINEER OF RECORD AND SHALL NOT BE CONSTRUED AS SUCH.

poligon® PLANNING ARCHITECTURE
800-354-7721
www.poligon.com
by PORTERCORP
PORTERCORP 4240 N. 136th AVE HOLLAND, MI 49424

PRINT DATE: 10/9/2009
SCALE: 1:30
DRAWN BY: briste
REV LEVEL: A
CREATION DATE: 5/27/2009
JOB NO: 46542

PATENTED AND/OR PATENTS PENDING COPYRIGHT 2006 PORTERCORP HOLLAND, MI 49424

PROJECT: SANDHILL OWEN PARK & TRAILHEAD
PROJECT LOCATION: HENDERSON, NV 89074
DRAWING: ROOF LAYOUT
C.A.D. MODEL: HXE-20-F1-B2-46542

SHEET
PR.08