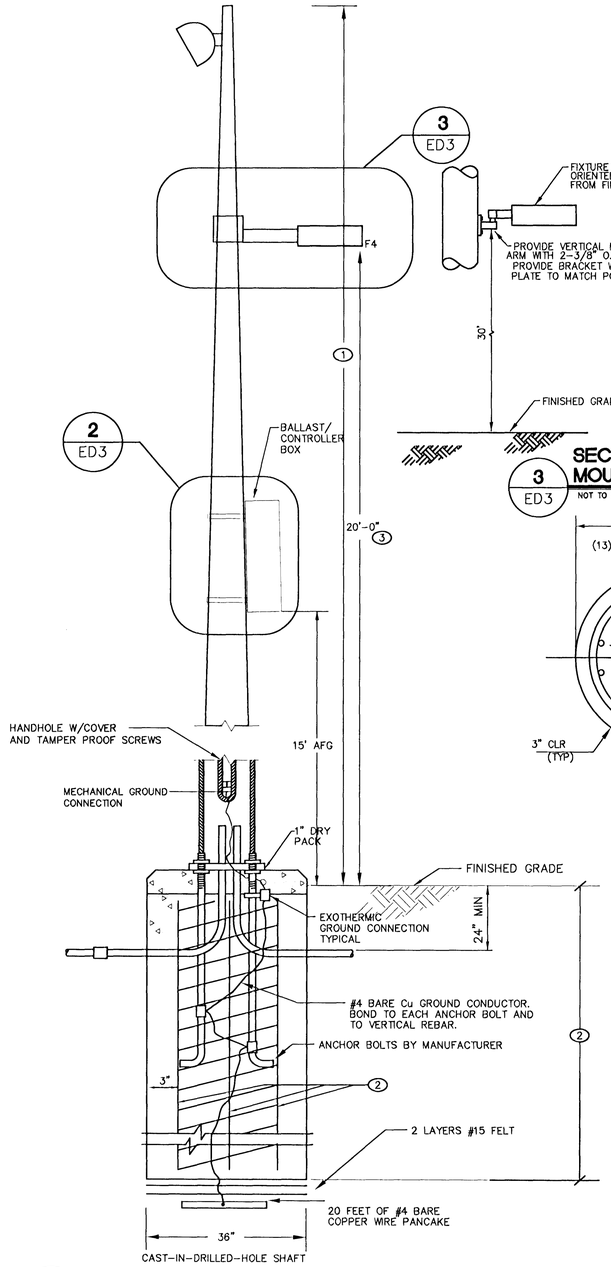

1 ED3 SPORT LIGHT POLE FOUNDATION DETAIL

NOT TO SCALE

NOTE:

1. REFER TO LIGHT FIXTURE SCHEDULE FOR POLE HEIGHT.
2. REFER TO MS1 FOR STRUCTURAL REQUIREMENTS ON SPORT POLES.
3. INSTALL AT 20' ABOVE FINISHED GROUND.

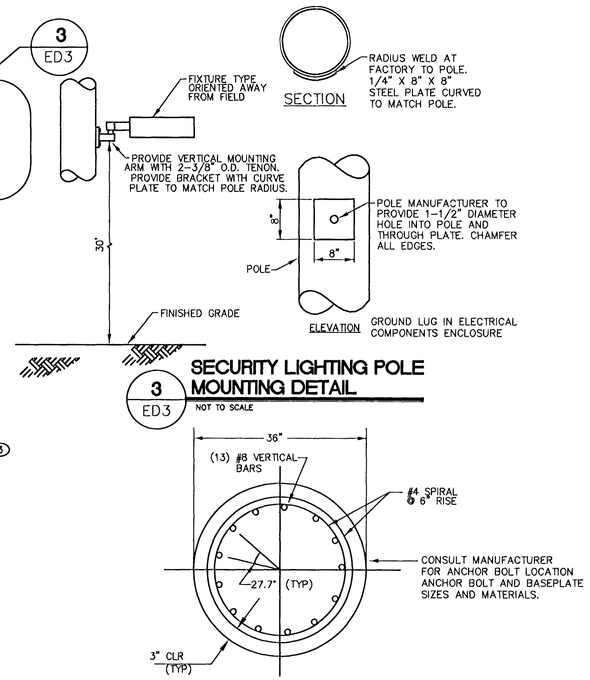

3 ED3 SECURITY LIGHTING POLE MOUNTING DETAIL

NOT TO SCALE

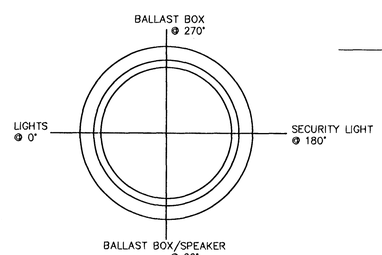

SPORT POLE ALIGNMENT

NOT TO SCALE

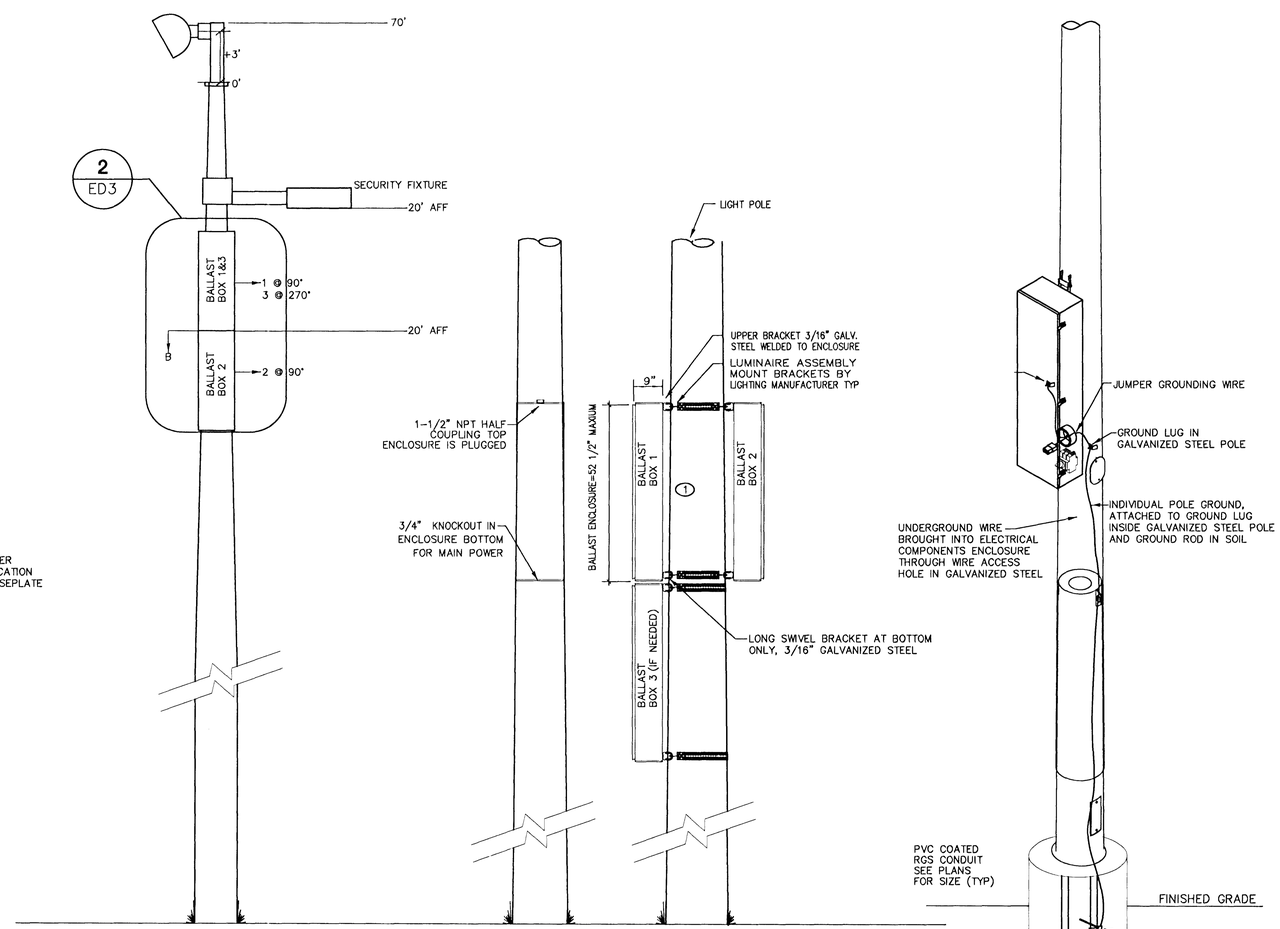

2 ED3 SPORT/SECURITY LIGHTING, BALLAST MOUNTING DETAIL

NOT TO SCALE

NOTE:

1. BALLAST/CONTROLLER BOX WILL BE PLACED AT 15' AT 90° FROM SECURITY LIGHT OR JUST UNDERNEATH FIXTURE MINIMUM 1' FROM BASE OF SECURITY LIGHT. REFER TO SPORT POLE ALIGNMENT FOR BALLAST LOCATION

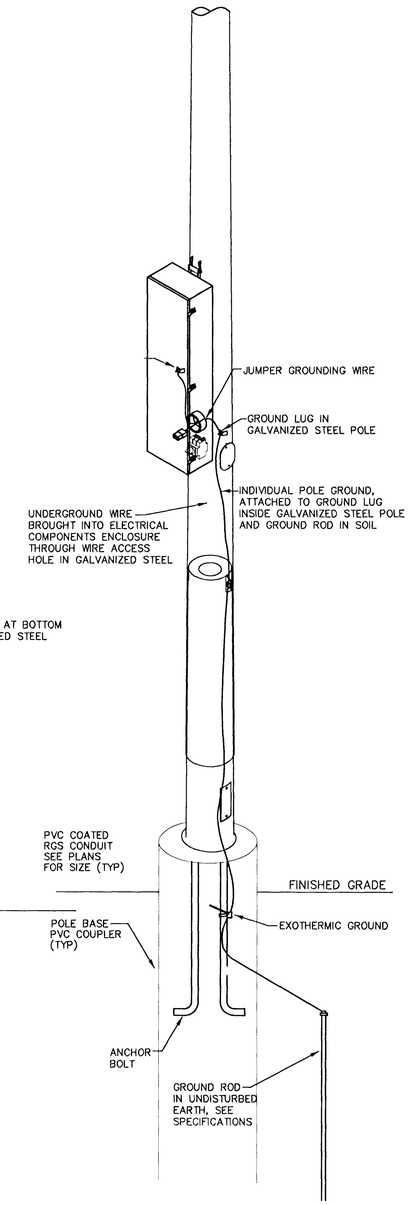

THESE RECORD DOCUMENTS HAVE BEEN PREPARED BASED ON INFORMATION PROVIDED BY OTHERS. THE DESIGN PROFESSIONAL HAS NOT VERIFIED THE ACCURACY AND/OR COMPLETENESS OF THIS INFORMATION AND SHALL NOT BE RESPONSIBLE FOR ANY ERRORS OR OMISSIONS WHICH MAY BE INCORPORATED HEREIN AS A RESULT.

Call before you Dig
Call 811
1-888-227-2600
1-702-486-7944

CITY OF LAS VEGAS NEVADA

DEPARTMENT OF PUBLIC WORKS

REVISIONS

CONSULTANT

SANDHILL OWENS PARK & TRAILHEAD
LAS VEGAS, NEVADA

ELECTRICAL DETAIL PLAN

STAMP

OWNER: CITY OF LAS VEGAS
DEPARTMENT OF PUBLIC WORKS
CAPITAL PROJECT MANAGEMENT SECTION

400 EAST STEWART AVENUE
LAS VEGAS, NEVADA 89101
PHONE: (702) 229-5535
FAX: (702) 384-8846
TDD: (702) 386-9108

DRAWN	
FILE	
DATE	12/7/2009
SCALE	NTS
BID NO	09.1534.1.11
CLV DWG NO	
SHT NO	ED3

DRAWINGS AND SPECIFICATIONS ARE THE PROPERTY OF THE DESIGN PROFESSIONAL. REUSE, STAMP OF CERTIFICATION, APPROVAL OR THE DRAWINGS AND SPECIFICATIONS ANY USE OR REPRODUCTION IN WHOLE OR IN PART WITHOUT WRITTEN CONSENT IS STRICTLY PROHIBITED. COPIES OF THE DRAWINGS AND SPECIFICATIONS RETAINED BY THE CLIENT MAY BE UTILIZED ONLY FOR OCCUPYING THE PROJECT FOR WHICH THEY WERE PREPARED AND NOT FOR THE CONSTRUCTION OF ANY OTHER PROJECT. A.A.C. 6.02.780

12-3-2-15