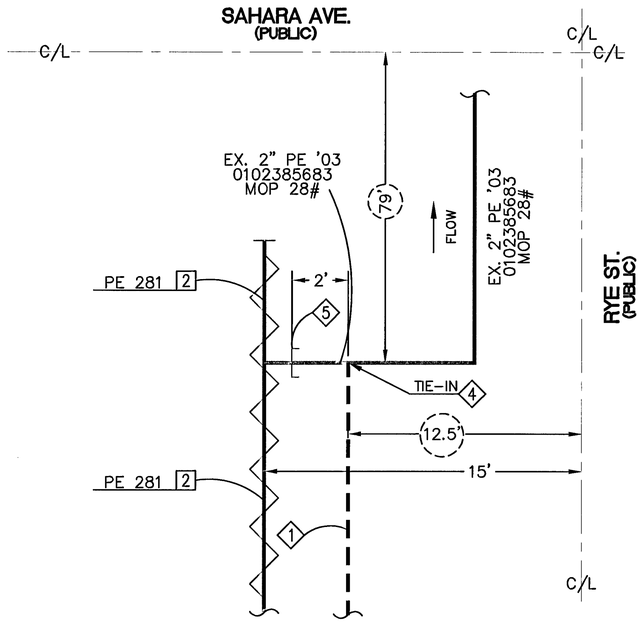

N

A
-

TIE-IN DETAIL
(SEE SHEET 3)

N.T.S.

PROPOSED PE FACILITIES:

1. PROPOSED 2" PE MAIN
2. PROPOSED 2" PE TEE #140-3074
3. PROPOSED 2" PE 90 DEGREE ELBOW #140-3067
4. PROPOSED 2" PE HVTT #160-8171
5. PROPOSED 2" PE CAP #140-3060

PROPOSED STEEL FACILITIES:

1. TEE, SHORT STOPP, 3-WAY, 2", WELD, ANSI 150 TDWL #160-8018
2. TRANSITION FITTING, 2" STEEL TO 2" PE #160-8162
3. CAP, STEEL WELD, 2" STD WT, GRADE B #140-3301
4. 5 TERM CP TEST STATION #251-2406

ABANDONED FACILITIES:

2. ABANDON EX. 2" STL '61 MOP 28#

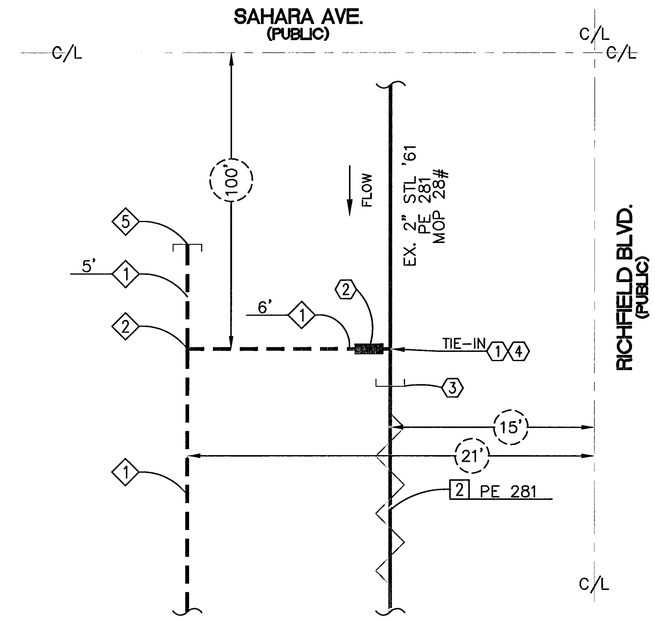

N

B
-

TIE-IN DETAIL
(SEE SHEET 4)

N.T.S.

Know what's **below.**
Call before you dig.

NO.	DESCRIPTION	BY	DATE	APPVD
1.				
2.				
3.				
4.				

REVISIONS

SOUTHWEST GAS CORPORATION

TAX CODES	UNIT NO.	UNIT TYPE	INSTL. (PROPOSED)	RETIRED (PROPOSED)	INSTL. (COMPLETED)	RETIRED (COMPLETED)

PROPERTY UNITS

SEE SHEET 2

AS-BUILT DRAWING-PRESSURE TEST DATA

TEST MEDIUM: ☐ AIR ☐ NITROGEN ☐ WATER
TEST METHOD: ☐ GAUGE ☐ CHART ☐ GAUGE/PRESS REC SN#
PIPE DIA. ____
PIPE LENGTH ____
PIPE TYPE ____
MIN. DURATION ____
TEST PRES. (PSIG) ____ START ____ END ____
TIME ____
DATE ____
PERFORMED BY ____

SEE SHEET 2

VISUAL INSPECTION CERTIFICATION
I HAVE VISUALLY INSPECTED ALL HEATED FUSIONS, SOLVENT CEMENT, MECHANICAL JOINTS, AND WELDS THAT I HAVE PERFORMED
NAME ____ DATE ____

SEE SHEET 2

AS-BUILTS ACCEPTED BY ____ DATE ____
POSTED BY ____ DATE ____
POSTING QC'D BY ____ DATE ____

CONSTRUCTION
INSPECTOR ____
FOREMAN ____
REVIEWED BY ____

SEE SHEET 2

PERMIT INFORMATION
CITY OF LAS VEGAS
TAX CODE 02-0200

ISOLATION AREA	W.R. NO.
DIST_185	1769061

LOCATION	ATLAS #/TILE #
SEC 8 T21S R61E M.D.M.	x615y506 x618y506

ENGINEER/TECH: RYAN MORGAN		PHONE: 702-365-2172
ACCOUNT REP:		PHONE:
PROJECT CONTACT:		PHONE:
SHEET NO: 7 OF 8	SCALE: N.T.S.	DATE: 01/20/2014
DWN. BY: SEI	CHKD. BY:	APPVD. BY:

TITLE

SI-CLV-SAHARA/RICHFIELD 2" STEEL REPLACEMENT

DOC_1769061