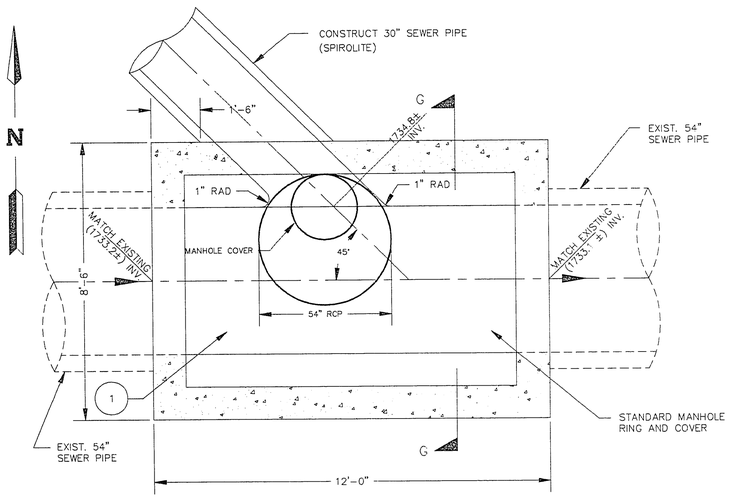

NOTES

1. JUNCTION BOX TO BE CONSTRUCTED OVER EXISTING SEWERLINE. SHOP DRAWINGS TO BE SUBMITTED TO ENGINEER WHICH PROVIDE DETAILS FOR BREAK-OUT AND CONNECTION TO EXISTING PIPE.

JUNCTION BOX "C"

NOT TO SCALE

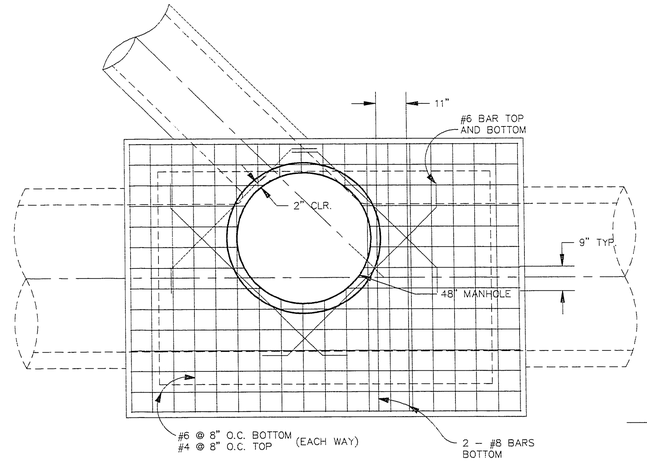

JUNCTION BOX "C"
TOP SLAB REINFORCING PLAN

NOT TO SCALE

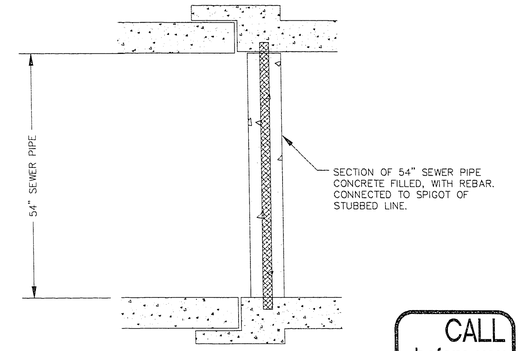

54" SEWER CONCRETE PLUG

NOT TO SCALE

CALL before you DIG
1-800-227-2600
UNDERGROUND SERVICE (USA)
AVOID CUTTING UNDERGROUND UTILITY LINES. IT'S COSTLY

STRUCTURAL NOTES

1. CONCRETE: f c = 4000 PSI MINIMUM AT 28 DAYS.
2. CEMENT : TYPE V SULFATE RESISTANT.
3. REINFORCING STEEL: ASTM A615 GRADE 60.

NOTES

* ALL HORIZONTAL BARS ARE TO RUN CONTINUOUS AROUND CORNERS. CLASS C SPLICE WHERE REQUIRED.

** VERTICAL BARS MAY BE DOWWELED INTO FLG. W/A CLASS C LAP SPLICE.

ALL JUNCTION BOXES TO BE PVC LINED

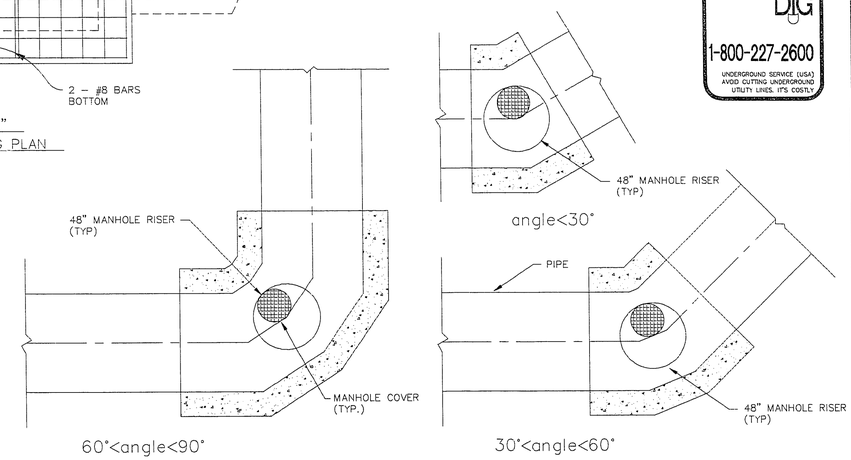

PLAN

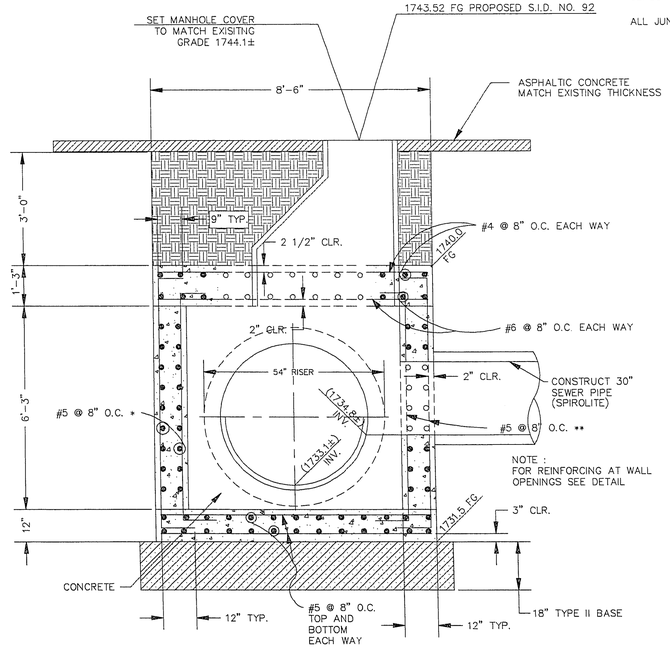

SECTION G-G

NOT TO SCALE

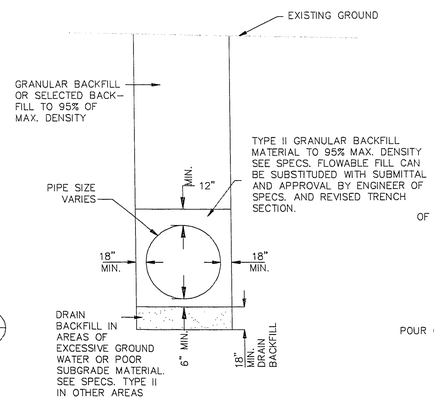

TYPICAL TRENCH SECTION 2/8

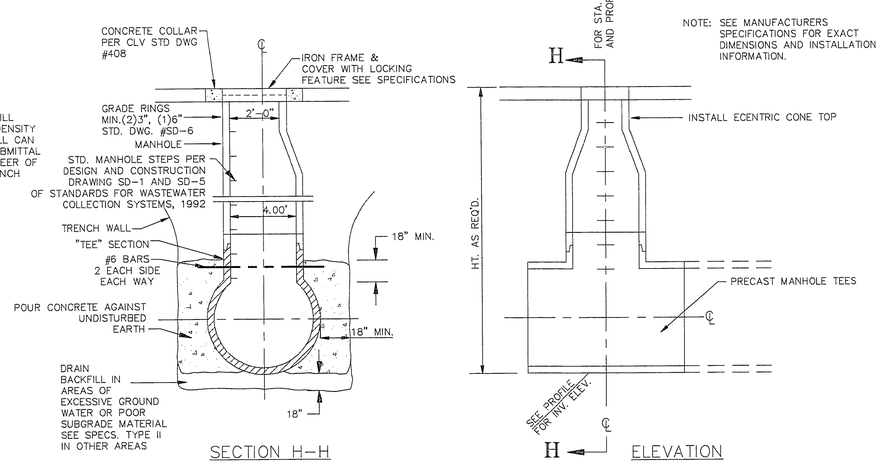

NOTE: SEE MANUFACTURERS SPECIFICATIONS FOR EXACT DIMENSIONS AND INSTALLATION INFORMATION.

TYPICAL MANHOLE DETAIL 1/8

AS-BUILT

NOTE: AS-BUILT COMPRISED OF INFORMATION SUPPLIED BY CITY OF LAS VEGAS AND CONTRACTOR.

REV.	DATE	BY	REVISION
1	6/22/94	K.E.	"AS-BUILTS"

THE MARK GROUP, INC. ENGINEERS & GEOLOGISTS
2975 SO. RAINBOW BLVD., SUITE G
LAS VEGAS, NEVADA 89102
PHONE (702) 364-1066

DRAWN BY W.J.R. / R.D.S.
DESIGNED BY K.E.J.
APPROVED BY D.H.M.

CITY OF LAS VEGAS NEVADA

TITLE: JUNCTION BOX "C" AND TYPICAL MANHOLE DETAIL

PROJECT: SAHARA INTERCEPTOR ARDEN TO W.P.C.F., PHASE I

PROJECT NO. 91-2464.1
DATE : 8/05/93
SCALE : HORIZ. NONE
VERT. NONE
DWG. FILE: RA_JUNCC.DWG

SHEET 8 OF 10 SHEETS

307-V710-1