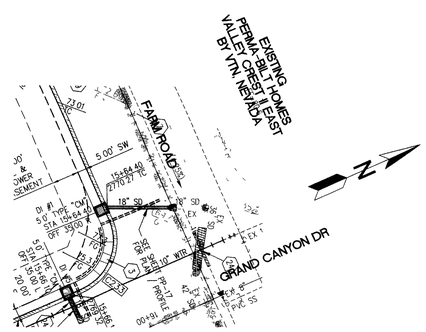

STORM DRAIN #1

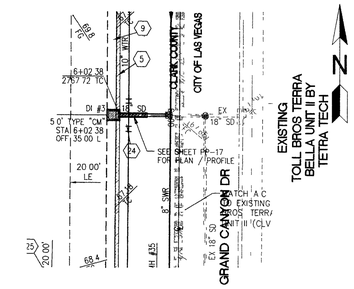

STORM DRAIN #3

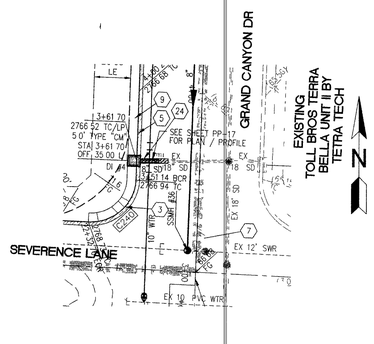

STORM DRAIN #4

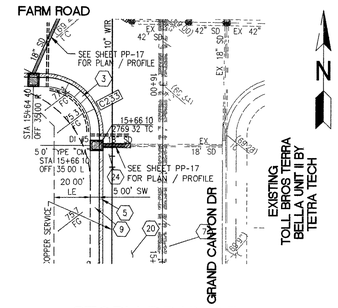

STORM DRAIN #5

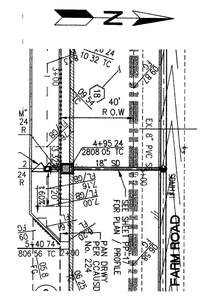

STORM DRAIN #2, #6

SCALE 1" = 40'

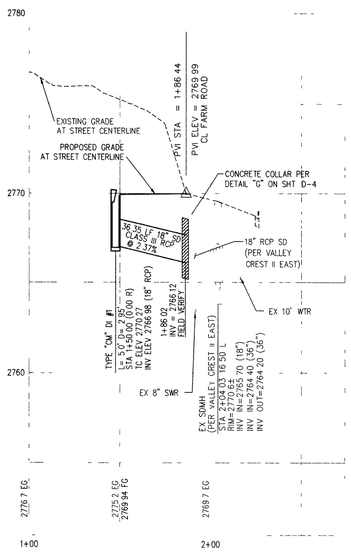

PROFILE

HOR . 1"=40'
VERT 1"=4'

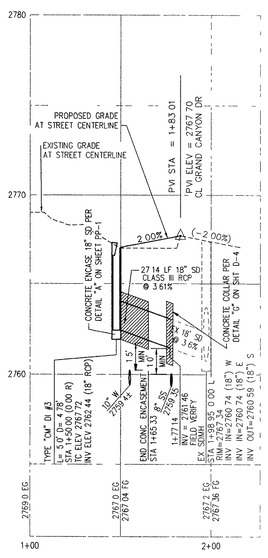

PROFILE

HOR 1"=40'
VERT 1"=4'

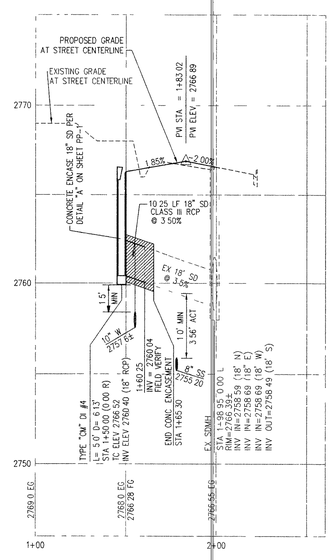

PROFILE

HOR 1"=40'
VERT 1"=4'

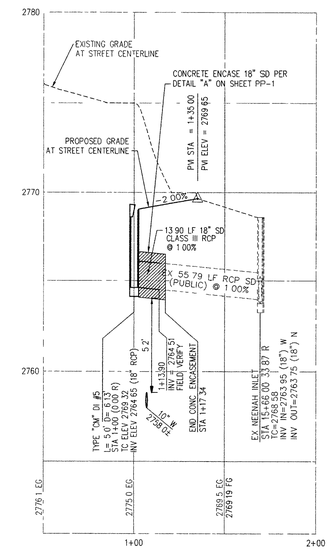

PROFILE

HOR 1"=40'
VERT . 1"=4'

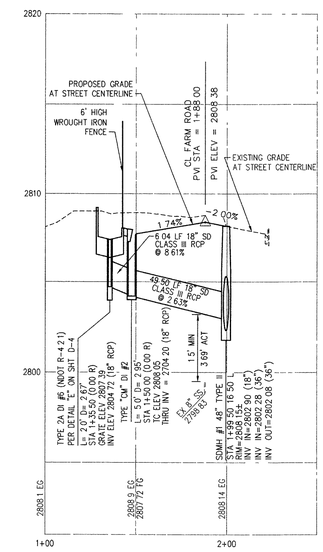

PROFILE

HOR : 1"=40'
VERT 1"=4'

CONSTRUCTION NOTES

1. CONSTRUCT 8' WIDE CROSS GUTTER PER DETAIL CCAUSD #228 (SEE DETAIL ON SHEET D-2)
2. CONSTRUCT 4' WIDE BY 4" THICK SIDEWALK PER CCAUSD #234
3. CONSTRUCT SIDEWALK RAMPS USING ARMOR TILE TRUNCATED DOMES OR EQUIVALENT PER CCAUSD #235, CASE I
4. CONSTRUCT ROLL CURB PER DETAIL CCAUSD #217A
5. CONSTRUCT "L" TYPE CURB PER CCAUSD #216
6. CONSTRUCT 2" AC ON 4" TYPE II A B ON 6" TYPE I OR NATIVE, SEE SECTION "C", SHEET D-1
7. SAWCUT, REMOVE AND REPLACE EXISTING PAVEMENT PER PROP STREET SECTION
8. CONSTRUCT 10' TRANSITION FROM ROLL CURB TO "L" CURB SEE DETAIL "X", SHEET D-2
9. CONSTRUCT 5' WIDE BY 4" THICK SIDEWALK PER CCAUSD #234
10. CONTRACTOR TO VERIFY ELEV OF EXIST CURB AND GUTTER, PVMT., STORM DRAIN, RETAINING WALL ELEVATIONS, AND SDWK PRIOR TO CONST NOTIFY ENGINEER OF ANY CONFLICTS
14. CONST SIDEWALK UNDERDRAIN PER CCAUSD NO 236
15. CONST "A" TYPE MEDIAN CURB PER CCAUSD #219
16. CONST DEPRESSED CURB PER CCAUSD #227
17. CONST BLOCK WALL OPENING PER SECTION "C", SHEET D-4
18. CONST 4" AC ON 4" TYPE II A B ON 9" TYPE I, SEE SECTION "A", SHEET D-1
19. CONST 4" AC ON 4" TYPE II A B ON 9" TYPE I, SEE SECTION "C", SHEET D-3
20. CONST 4" AC ON 4" TYPE II A B ON 9" TYPE I, SEE SECTION "E" SHEET D-1
21. CONST 3" AC ON 9" TYPE II A B, SEE SECTION "B", SHEET D-1
22. CONST 3" AC ON 9" TYPE II A B, SEE SECTION "B", SHEET D-3
23. CONSTRUCT CONC CUTOFF WALL PER SECTION 'C', SHEET D-3
24. CONCRETE ENCASEMENT PER UDACS SEC 219
25. CONST BLOCK WALL OPENING PER DETAIL "D" ON SHT D-6

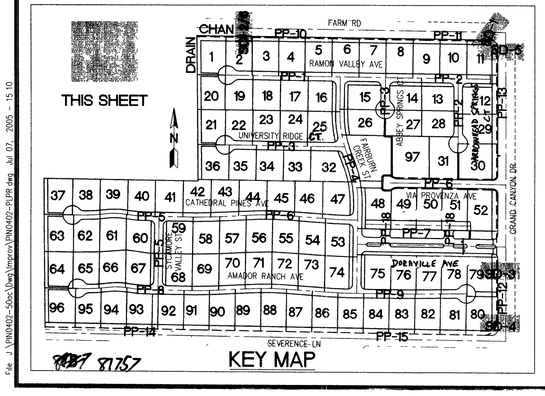

KEY MAP

EASEMENT NOTES

1. 37' DRAINAGE EASEMENT, LVVWD WATER EASEMENT, PUBLIC UTILITY EASEMENT (TO BE MAINTAINED BY H O A) AND CLV PUBLIC SEWER EASEMENT
   DENOTES AREA TO BE COVERED BY (1) EASEMENT CALLOUT
2. 20' DRAINAGE EASEMENT (TO BE MAINTAINED BY H O A) AND CLV PUBLIC SEWER EASEMENT
3. DRAINAGE EASEMENT TO BE PRIVATELY MAINTAINED BY H O A (SEE DIMENSION ON PLAN FOR EASEMENT WIDTH)

BENCHMARK

BENCHMARK-FOUND CITY OF LAS VEGAS RIVET AND ROUND PLATE IN CONCRETE CYLINDER, SOUTHEAST CORNER OF ELKHORN RD AND CONQUISTADOR ST

BM NO 66 STATION 8LV90 19NNW6 ELEVATION = 2803 77 (NAVD 88)

BASIS OF BEARING

THE BASIS OF BEARINGS FOR THIS SURVEY IS BASED ON THE FOUND AND HELD MONUMENTS MARKING THE SOUTHERLY LINE OF THE SOUTHWEST QUARTER (SW1/4) OF THE SOUTHEAST QUARTER (SE1/4) OF SECTION 13, T19S, R60E, MDM, CLARK COUNTY, NEVADA PER RECORD OF SURVEY BOOK 123, PAGE 32, CLARK COUNTY RECORDER'S OFFICE AS SOUTH 88°46'46" EAST

APPROVED FOR CONSTRUCTION

LAS VEGAS VALLEY WATER DISTRICT — DATE 7-11-05
PROJECT# H108887

CLARK COUNTY DEPARTMENT OF DEVELOPMENT SERVICES
ACCEPTANCE OF PLANS FOR FILING

BY _____

ACCEPTANCE OF THESE PLANS FOR FILLING SHALL NOT BE CONSTRUED TO BE A PERMIT FOR OR AN APPROVAL OF ANY VIOLATION OF ANY OF THE PROVISIONS OF THE STATE OR COUNTY LAWS AND/OR SPECIFICATIONS CLARK COUNTY SHALL BE HELD FREE FROM DAMAGES WHICH MAY RESULT FROM THE CONSTRUCTION OF THE IMPROVEMENTS FROM THE ENGINEERING DESIGN DEPICTED HEREIN

NOTE POWER POLES AND/OR OTHER EXISTING FACILITIES NOT IN PROPER LOCATION BASED ON PROPOSED IMPROVEMENTS SHOWN HEREON WILL BE RELOCATED AT NO EXPENSE TO CLARK COUNTY

HAND-FILLING UNDERGROUND ELECTRIC SERVICE CONDUITS AND SINGLE-PHASE SERVICE CABLES
CALL BEFORE YOU DO UNDERGROUND
Call before you UnderGround
1-702-455-7511
OR
1-702-229-6611
LVS VALLEY WATER DISTRICT WATER SYSTEM

Avoid cutting underground utility lines. It's costly
Call before you Dig.
1-800-227-2600
UNDERGROUND SERVICE (USA)

AVOID HITTING OVERHEAD POWER LINES. IT'S COSTLY
CALL BEFORE YOU DO OVERHEAD
1-702-227-2929

SLATER HANIFAN GROUP
CONSULTING ENGINEERS & PLANNERS
5740 S. ARVILLE STREET #216, LAS VEGAS, NV 89118
PHONE (702) 284-5300 FAX (702) 284-5399

NO.	DESCRIPTION	DATE	BY	APP

CLARK COUNTY, NEVADA

PINNACLE HOMES

SECTION 18
TOWNSHIP 19 SOUTH
RANGE 60 EAST, M.D.M.

SABLE CREEK
STORM DRAIN LATERALS 1, 3, 4, 5 AND 2 + 6
PLAN AND PROFILE

DATE: 07/07/05
DRAFTER: JNR
DESIGNER: JNR
CHECKED TJS

PROJECT NO.
PIN0402-001

PROFESSIONAL ENGINEER — STATE OF NEVADA
TODD J. STEADHAM
Exp. 06/30/2006
CIVIL
No. 15292
7/8/05

PP-17
SHEET 30 OF 44

CLV DWG # 3070930
CC HTE # 05-7995

File: J:\PIN0402-50sc\Dwg\Improv\PIN0402-PLPR.dwg Jul 07, 2005 - 15:10