5-2-76

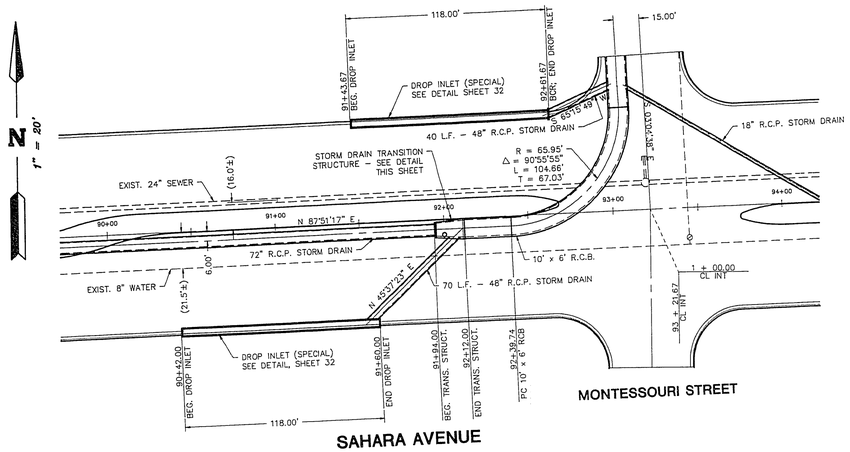

DRAINAGE STRUCTURE LOCATION PLAN

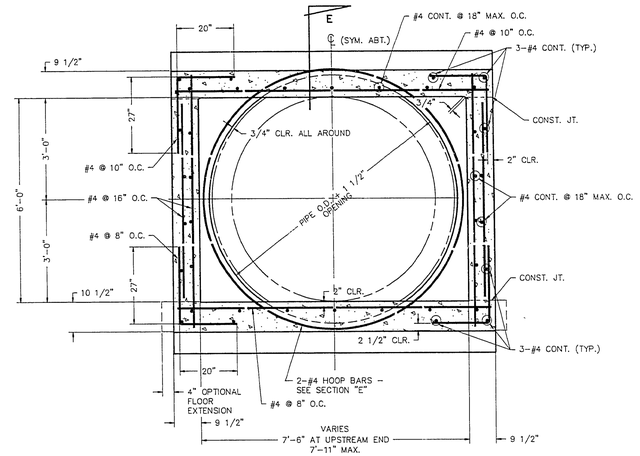

SECTION "A"
STA. 91+94.00 TO 91+97.00
3/4" = 1'-0"

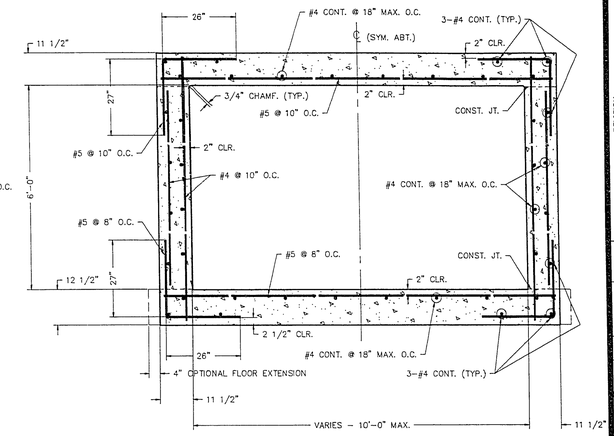

SECTION "D"
STA. 92+09.00 TO 92+12.00
10' x 6' R.C.B. SECTION SIMILAR
3/4" = 1'-0"

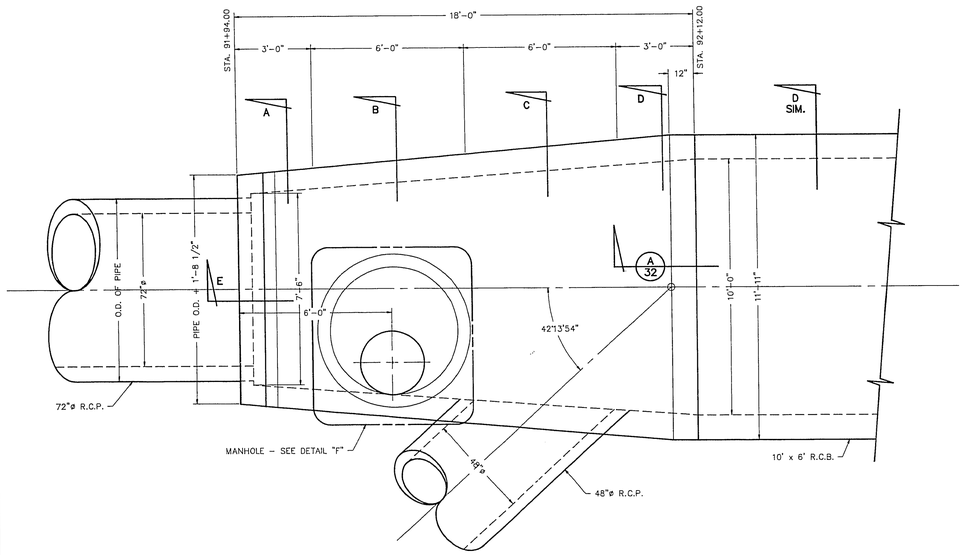

TRANSITION STRUCTURE PLAN
1/2" = 1'-0"

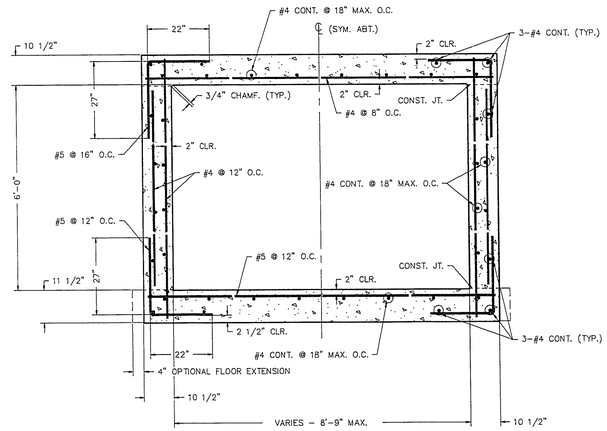

SECTION "B"
STA. 91+97.00 TO 92+03.00
3/4" = 1'-0"

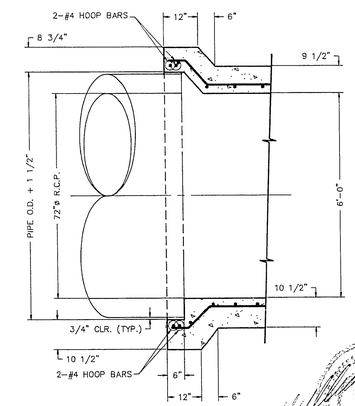

SECTION "E"
3/4" = 1'-0"

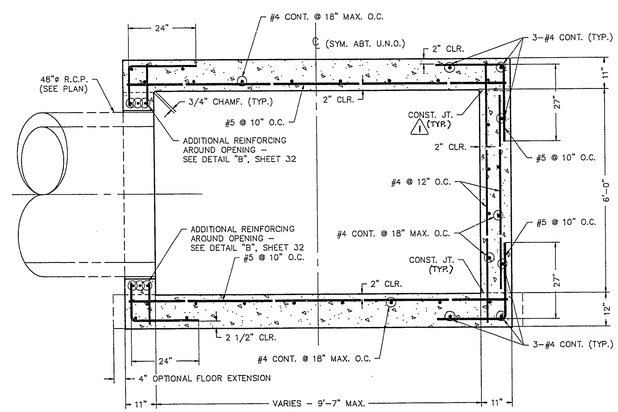

SECTION "C"
STA. 92+03.00 TO 92+09.00
3/4" = 1'-0"

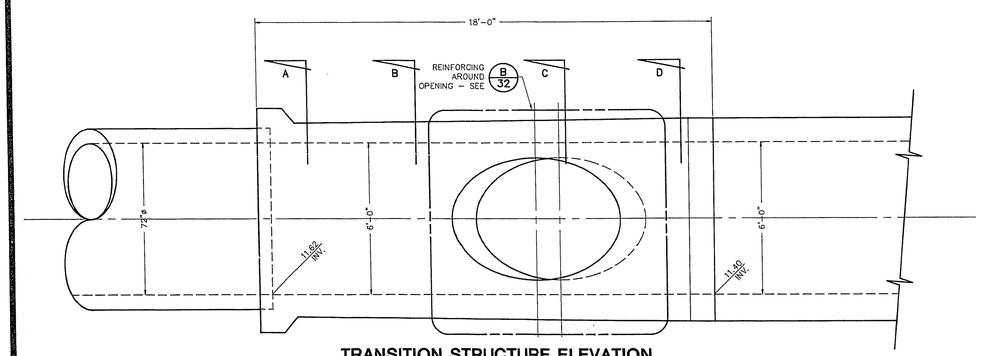

TRANSITION STRUCTURE ELEVATION
1/2" = 1'-0"

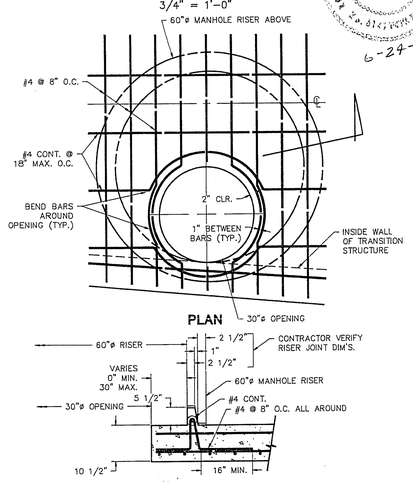

PLAN

SECTION AT OPENING

MANHOLE DETAIL "F"
3/4" = 1'-0"

21603

REV.	DATE	BY	REVISION
1	04/03/92	DSR	ADDED "TYP'S" FOR CLARIFICATION, SECT."C"

FSI ENGINEERS & SURVEYORS, INC.
4004 W. WASHINGTON
LAS VEGAS, NEVADA 89107
ZONA M. NORTON
NEVADA REG. NO. 6113
CIVIL
STATE OF NEVADA
6/24/92

SUBMITTED BY:

TITLE: STORM DRAINAGE STRUCTURE DETAILS

PROJECT: S.I.D. No. 1427 - SAHARA AVENUE (DURANGO DRIVE TO RAINBOW BOULEVARD)

W.O. # :	130-9520
BY :	DSR
DATE :	JUNE 1992
SCALE :	AS NOTED

C.L.V. DRAWING NO. 107-V-2036

31/43

"As Built" 107-V2036