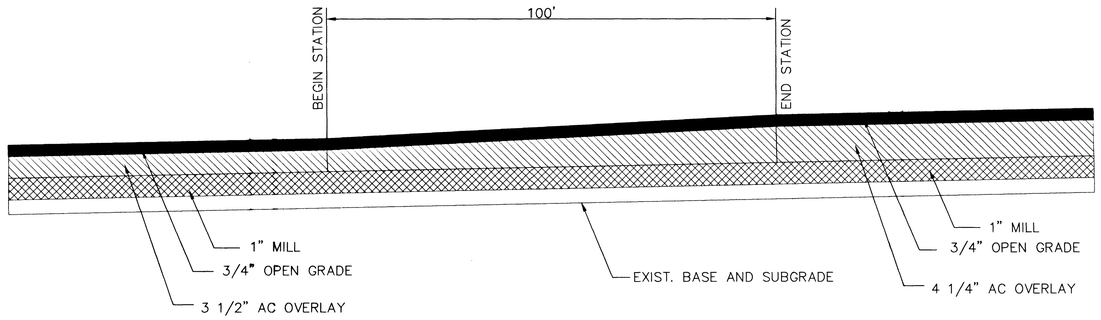

MILLED OVERLAY TRANSITION DETAIL

BEGIN STATION: "SR" 118+64.17 END STATION: "SR" 119+64.17

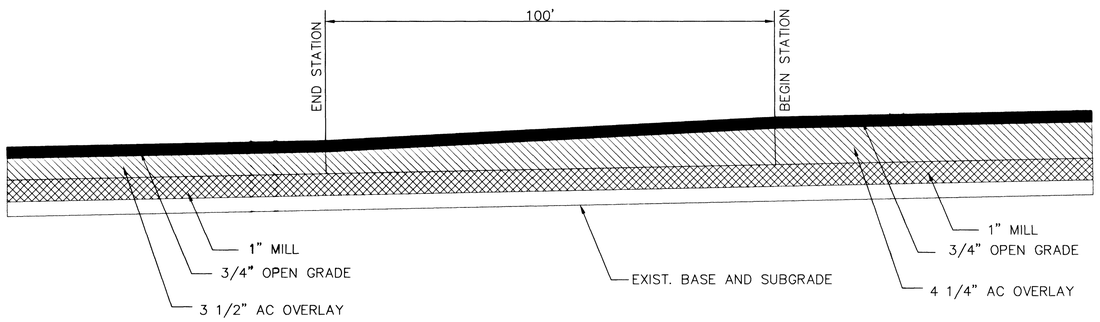

MILLED OVERLAY TRANSITION DETAIL

BEGIN STATION: "SR" 128+15.28 END STATION: "SR" 127+15.28

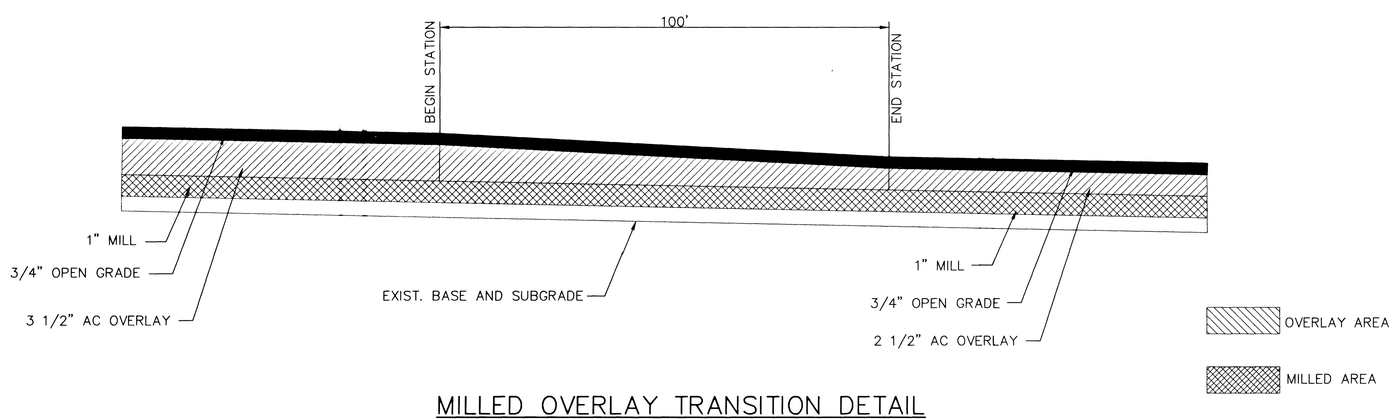

MILLED OVERLAY TRANSITION DETAIL

BEGIN STATION: "SR" 130+15.76 END STATION: "SR" 131+15.76

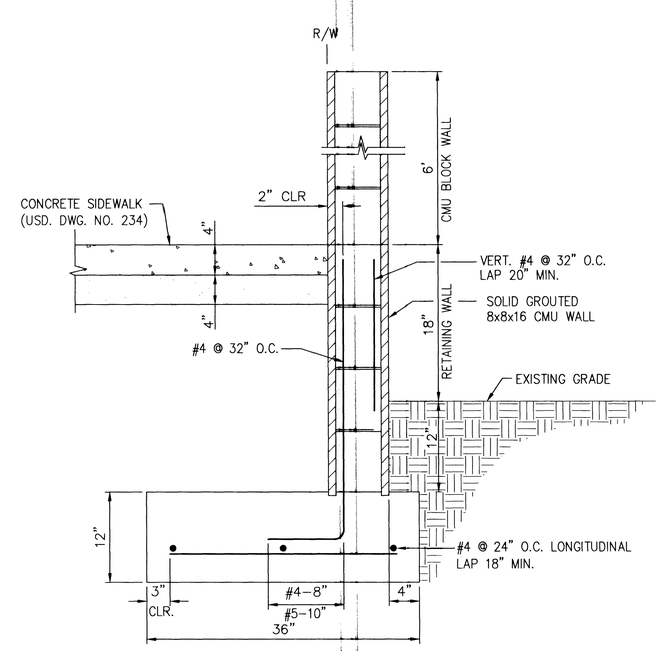

BLOCK WALL ON RETAINING WALL DETAIL

N.T.S.

"NR" 116+14.12 RT TO "NR" 117+46.40 RT

REV	DATE	DESCRIPTION	DATE	ARCH. APP.	DATE	APPROVED

PROJ NO: W7X70800
DESIGN: DEP
DATE: 2/14/2002
SCALE: NONE
CADFILE: [illegible]

PROFESSIONAL ENGINEER-STATE OF NEVADA
DAVID E. POTTER
CIVIL
No. 9880

STAMP DATE:

Sverdrup CIVIL, INC.
5450 W. SAHARA AVE., SUITE 150
LAS VEGAS, NEVADA 89102-1846
PHONE: (702) 870-7530
FAX: (702) 870-1731

RAINBOW BOULEVARD
RANCHO ROAD TO ANN ROAD

TYPICAL
CROSS SECTIONS

SHEET
XS-6
12 OF 38 SHEETS

DRAWING NO.
107-V3521

NAME: P:\W7X70800\700CADD\702CIVIL\702DWG\70800-ts23.DWG DATE: APR 15, 2002 TIME: 11:53 AM

41675