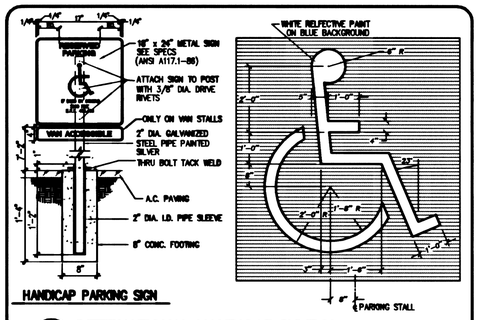

HANDICAP PARKING SIGN

A C6.00 INTERNATIONAL HANDICAP SYMBOL
N.T.S.

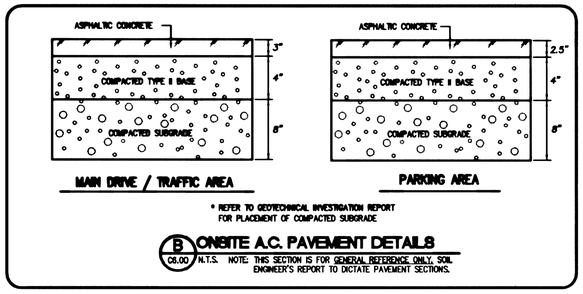

MAIN DRIVE / TRAFFIC AREA

PARKING AREA

* REFER TO GEOTECHNICAL INVESTIGATION REPORT FOR PLACEMENT OF COMPACTED SUBGRADE

B C6.00 ONSITE A.C. PAVEMENT DETAILS
N.T.S. NOTE: THIS SECTION IS FOR GENERAL REFERENCE ONLY. SOIL ENGINEER'S REPORT TO DICTATE PAVEMENT SECTIONS.

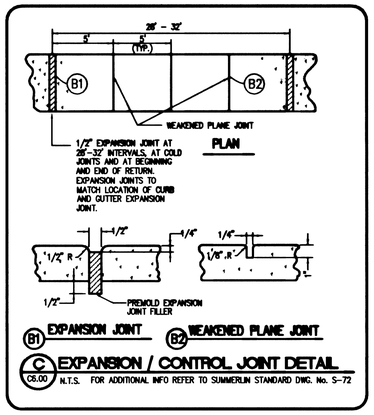

B1 EXPANSION JOINT B2 WEAKENED PLANE JOINT

C C6.00 EXPANSION / CONTROL JOINT DETAIL
N.T.S. FOR ADDITIONAL INFO REFER TO SUMMERLIN STANDARD DWG. No. S-72

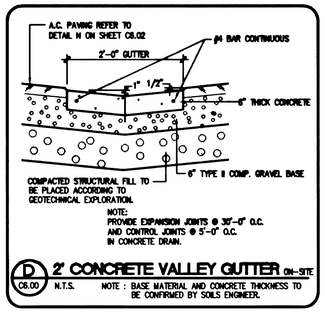

D C6.00 2' CONCRETE VALLEY GUTTER ON-SITE
N.T.S. NOTE : BASE MATERIAL AND CONCRETE THICKNESS TO BE CONFIRMED BY SOILS ENGINEER.

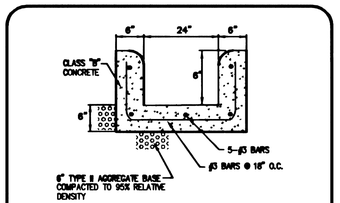

E C6.00 CONCRETE FLUME
N.T.S.

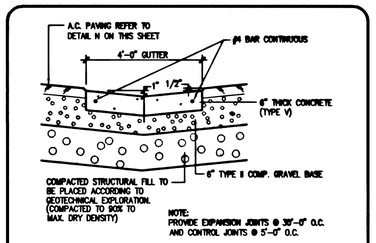

F C6.00 4' CONCRETE VALLEY GUTTER ON-SITE
N.T.S.

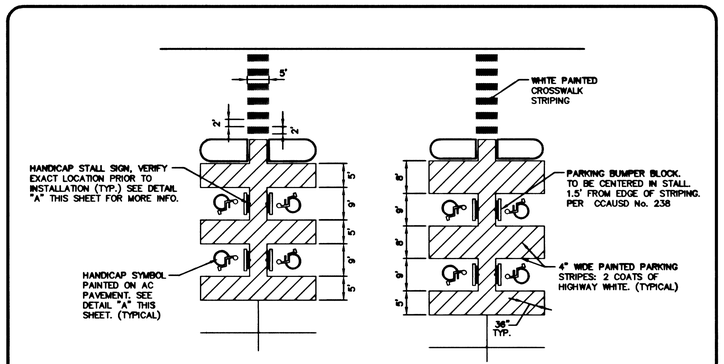

G C6.00 HANDICAP PARKING STALLS
N.T.S.

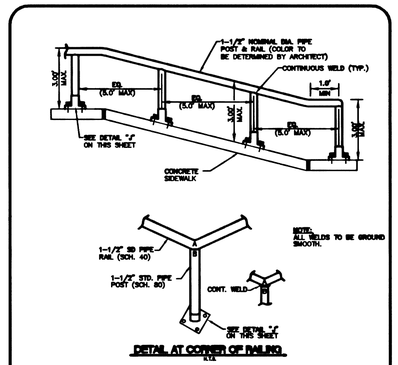

H C6.00 HAND RAIL
N.T.S.

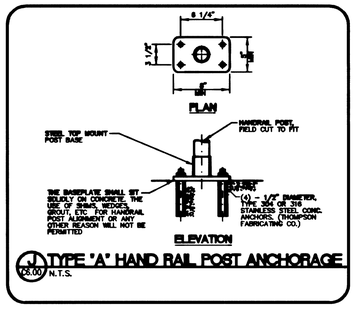

J C6.00 TYPE 'A' HAND RAIL POST ANCHORAGE
N.T.S.

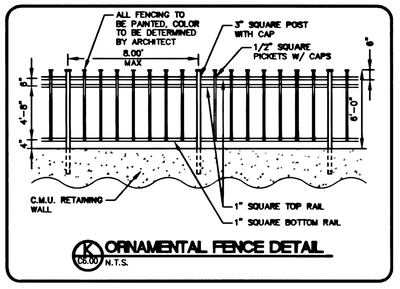

K C6.00 ORNAMENTAL FENCE DETAIL
N.T.S.

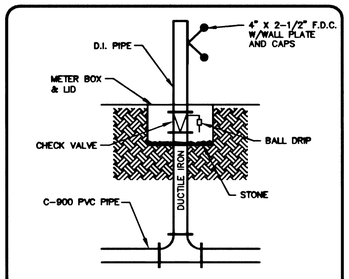

L C6.00 REMOTE FDC
N.T.S.

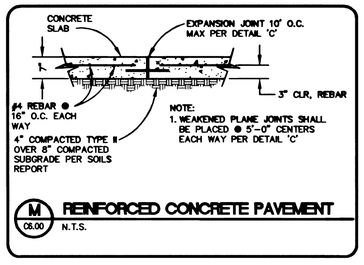

M C6.00 REINFORCED CONCRETE PAVEMENT
N.T.S.

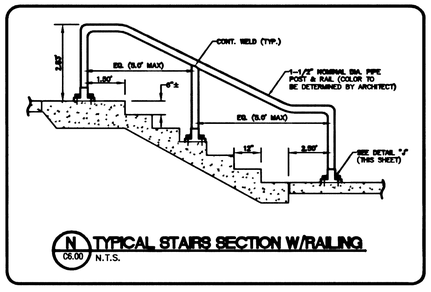

N C6.00 TYPICAL STAIRS SECTION W/RAILING
N.T.S.

SUMMERLIN

Q - THE SPORTS CLUB

VILLAGE CENTER DRIVE
SUMMERLIN, NEVADA

REVISIONS

WARNING:
THIS DRAWING FILE IS PROTECTED BY COPYRIGHT LAW AND INTERNATIONAL TREATIES. UNAUTHORIZED REPRODUCTION OR DISTRIBUTION OF THIS DRAWING OR ANY PORTION OF IT, MAY RESULT IN SEVERE CIVIL AND CRIMINAL PENALTIES, AND WILL BE PROSECUTED TO THE MAXIMUM EXTENT POSSIBLE UNDER LAW.

COPYRIGHT © 2001 PBS&J, INC.

PBSJ

CALL 2 WORK DAYS BEFORE YOU DIG. IT'S COURTESY. IT'S LAW. IT'S COST.
Call before you Overhead
1-702-563-6111
Call before you Dig
1-800-227-2600

PROFESSIONAL ENGINEER - STATE OF NEVADA
VERNON R. HARKINS
No. 8898
CIVIL
5/24/01
ENGINEERS SEAL

SHEET TITLE

DETAIL SHEET

PROJECT No. 511277	SHEET No. C6.00
DATE 05/24/01	107-V3482
DRAWN BY RBB	7 OF 9
CHECKED BY JGJ	

1277-d01.dwg RBB 05/23/01 16:20:44

3431