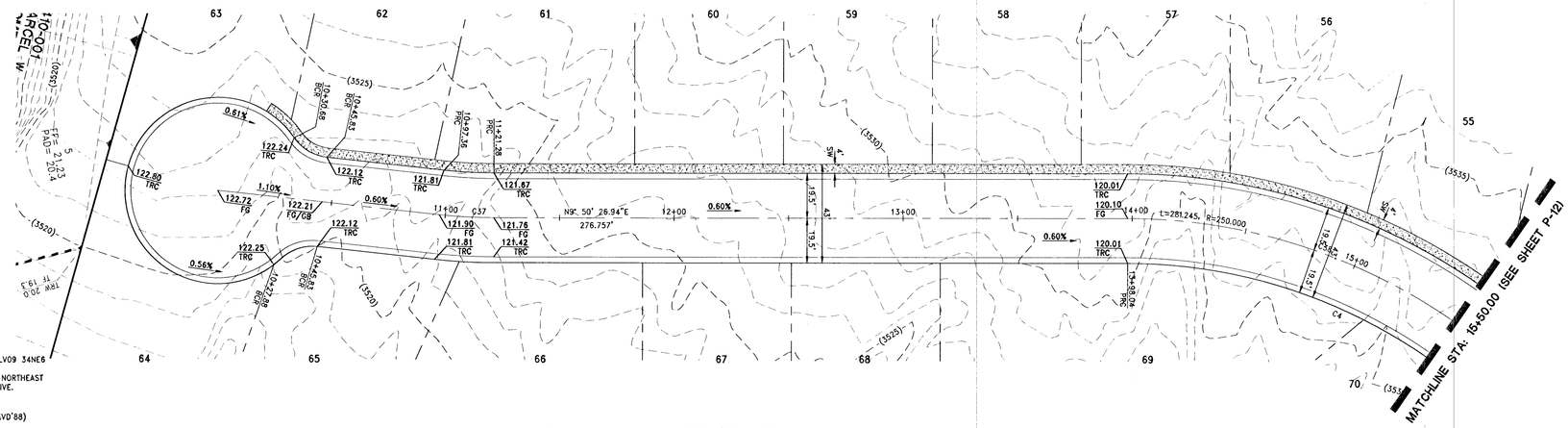

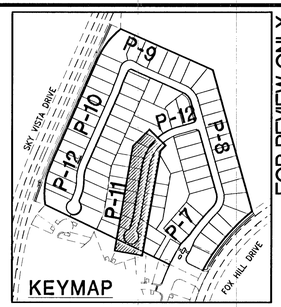

30' 15' 0' 30' 60'
HORIZONTAL SCALE: 1" = 30'
VERTICAL SCALE: 1" = 5'

BENCHMARK

CITY OF LAS VEGAS BENCHMARK STATION 5LV09 34NE6

RIVET AND PLATE IN TOP OF CURB AT THE NORTHEAST CORNER OF DESERT FOOTHILLS AND ALTA DRIVE.

ELEVATION = 1007.197 METERS (NAVD'88)
ELEVATION = 3304.45 US SURVEY FEET (NAVD'88)

BASIS OF BEARINGS

NORTH 89°46'49" EAST, BEING THE BEARING OF THE NORTH LINE OF SECTION 27, TOWNSHIP 20 SOUTH, RANGE 59 EAST, M.D.M., CITY OF LAS VEGAS, CLARK COUNTY, NEVADA AS SHOWN BY MAP THEREOF ON FILE IN FILE 91, PAGE 28 OF PARCEL MAPS IN THE COUNTY RECORDER'S OFFICE, CLARK COUNTY, NEVADA.

NOTE

SEE SHEET P-5 FOR CENTERLINE DATA, CURB DATA, AND UTILITY PROFILES.

LINDURA CT
(PRIVATE) CE-A

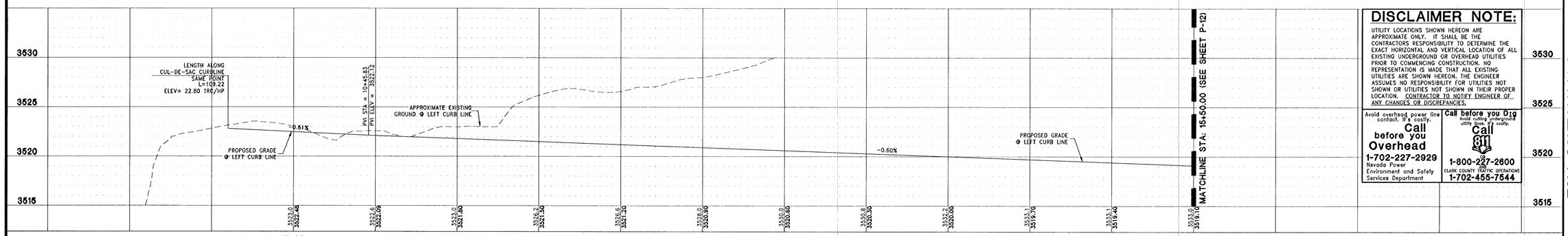

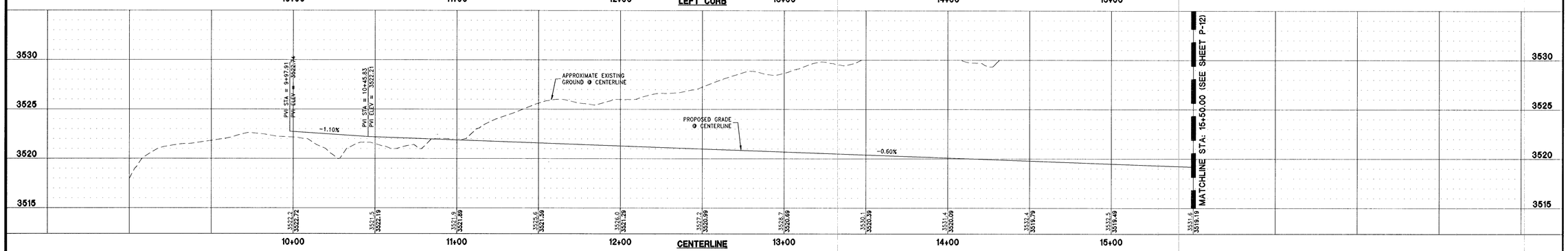

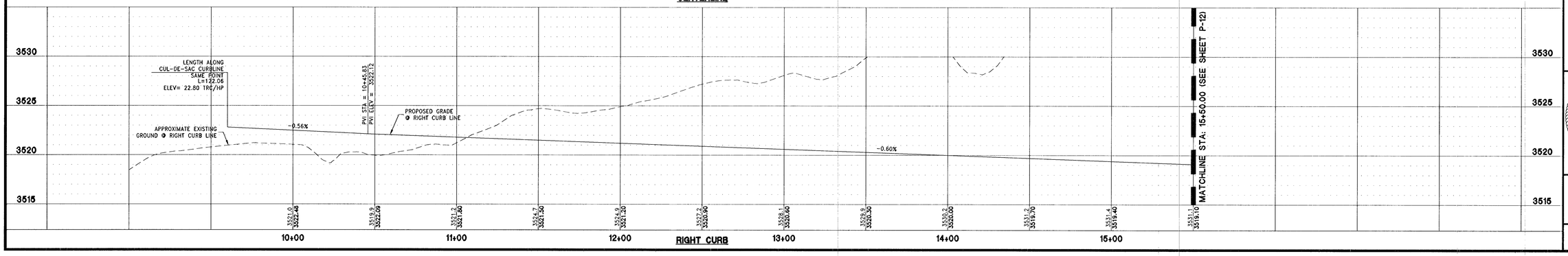

DISCLAIMER NOTE:

UTILITY LOCATIONS SHOWN HEREON ARE APPROXIMATE ONLY. IT SHALL BE THE CONTRACTORS RESPONSIBILITY TO DETERMINE THE EXACT HORIZONTAL AND VERTICAL LOCATION OF ALL EXISTING UNDERGROUND OR OVERHEAD UTILITIES PRIOR TO COMMENCING CONSTRUCTION. NO REPRESENTATION IS MADE THAT ALL EXISTING UTILITIES ARE SHOWN HEREON. THE ENGINEER ASSUMES NO RESPONSIBILITY FOR UTILITIES NOT SHOWN OR UTILITIES NOT SHOWN IN THEIR PROPER LOCATION. CONTRACTOR TO NOTIFY ENGINEER OF ANY CHANGES OR DISCREPANCIES.

Avoid overhead power line contact. It's costly.
Call before you Overhead
1-702-227-2929
Nevada Power Environment and Safety Services Department

Call before you Dig
Avoid cutting underground utility lines. It's costly.
Call 811
1-800-227-2600
or
CLARK COUNTY TRAFFIC OPERATIONS
1-702-455-7544

FOR REVIEW ONLY

REV	DESCRIPTION	BY	APPD	DATE

DATE: May 17, 2014
HORIZ. SCALE: 1"=30'
VERT. SCALE: 1"=5'
DRAWN BY: GS
DESIGNED BY: CR
CHECKED BY: JIL
APPROVED BY: JIL
PROJECT #: 3110.0017

TOLL SOUTH LV, LLC
1140 TOWN CENTER DRIVE, SUITE 250
LAS VEGAS, NV 89144
PHONE: 702-243-9800 FAX: 702-243-9610

RCI Engineering
4325 Dean Martin Drive Suite 300, Las Vegas, NV 89103
PH#702.453.0800 FAX#702.453.0801

MONTECITO AT SUMMERLIN VILLAGE 23B PARCEL X
A SINGLE FAMILY RESIDENTIAL SUBDIVISION
THREE LINE PLAN & PROFILE- LINDURA CT
STA: 9+97.91 - 15+50.00

CITY OF LAS VEGAS NEVADA

PROFESSIONAL ENGINEER STATE OF NEVADA
JOHN I. LAND
Exp. 12/31/2015
CIVIL
No. 16441
5/22/2014

DRAWING
P-11
SHT 31 OF 39

CLV DRAWING NUMBER
14-53318
107Y4897

CLV PROJECT #

O:\3110_Toll\0017_V23A_Parcel_X_CIVIL_PS\5008_P07.dwg scarobay 5/17/14 3:39pm