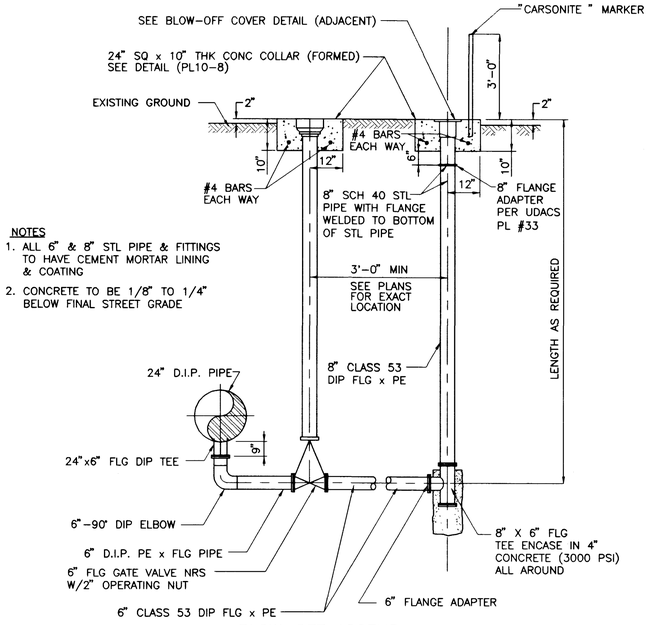

NOTES
1. ALL 6" & 8" STL PIPE & FITTINGS TO HAVE CEMENT MORTAR LINING & COATING
2. CONCRETE TO BE 1/8" TO 1/4" BELOW FINAL STREET GRADE

BLOW-OFF ASSEMBLY

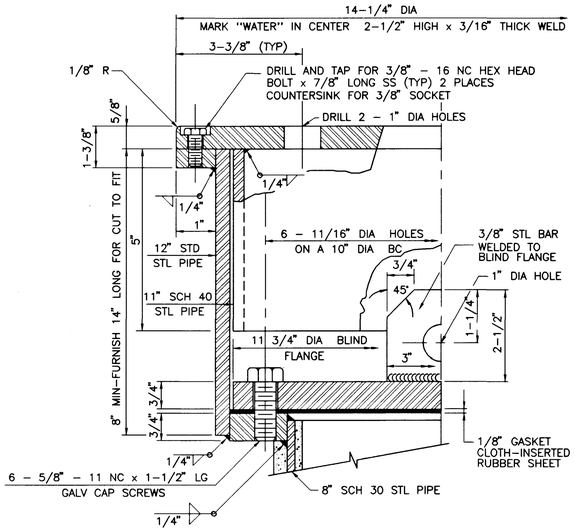

BLOW-OFF COVER

LOCATION OF BLOW-OFF ASSEMBLY	
SHEET	STATION
W3	STA 37+06.00
W6	STA 61+91.00
W6	STA 63+33.00
W8	STA 87+96.00
W11	STA 15+47.00

BLOW-OFF ASSEMBLY AND COVER DETAIL (1)

NOT TO SCALE

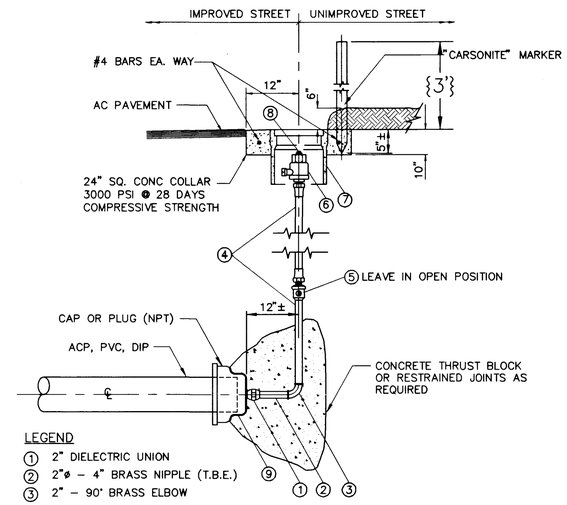

LEGEND
1. 2" DIELECTRIC UNION
2. 2"ø - 4" BRASS NIPPLE (T.B.E.)
3. 2" - 90° BRASS ELBOW
4. 2" COPPER TUBING
5. 2" CORP STOP
6. 2" CURB STOP
7. TRAFFIC VALVE BOX
8. PLUG
9. #15 FELT

NOTES:
1. COAT AND WRAP IN ACCORDANCE WITH DIVISION 15 PROTECTIVE COATINGS.
2. CONCRETE TO BE 1/8" TO 1/4" BELOW FINAL STREET GRADE.
3. REFER TO LVVWD PRE-APPROVED PRODUCTS MASTER LISTING FOR COMPLETE DESCRIPTION OF CONTENTS.

2" MANUAL BLOW-OFF ASSEMBLY FOR:
4" THROUGH 24" DI PIPE

2" MANUAL AIR RELEASE ASSEMBLY (6)

NOT TO SCALE

IMPROVED STREET INSTALLATION UNIMPROVED STREET INSTALLATION

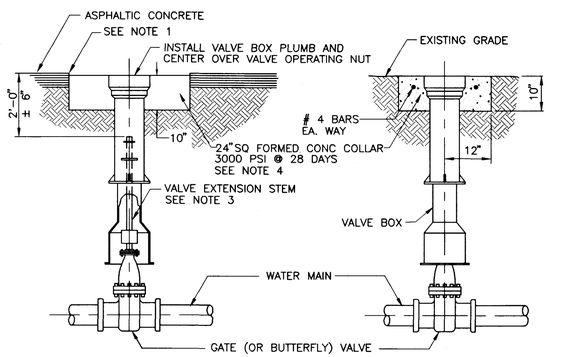

RAISE TOP SECTION AND/OR INSTALL RISERS AS NECESSARY.

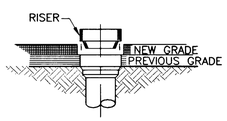

VALVE BOX ADJUSTMENT

NOTES
1. FINAL RIM ELEVATION TO BE 1/8" TO 1/4" BELOW FINAL STREET GRADE.
2. MORE STRINGENT INSTALLATION REQUIREMENTS MAY BE IMPOSED BY THE ENTITY HAVING THE JURISDICTION OVER THE VALVE BOX INSTALLATION LOCATION.
3. A VALVE EXTENSION STEM SHALL BE PROVIDED WHERE THE DEPTH TO THE OPERATING NUT EXCEEDS FIVE (5) FEET.
4. ALL CONCRETE COLLARS TO BE FORMED 10" THICK.

VALVE BOX INSTALLATION AND ADJUSTMENT (4)

NOT TO SCALE

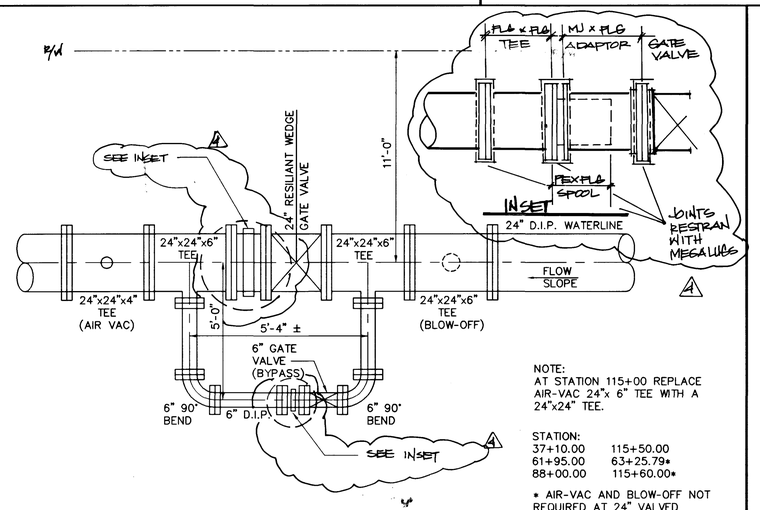

NOTE:
AT STATION 115+00 REPLACE AIR-VAC 24"x 6" TEE WITH A 24"x24" TEE.

STATION:

37+10.00	115+50.00
61+95.00	63+25.79*
88+00.00	115+60.00*

* AIR-VAC AND BLOW-OFF NOT REQUIRED AT 24" VALVED OUTLETS

6" BYPASS DETAIL (5)

NOT TO SCALE

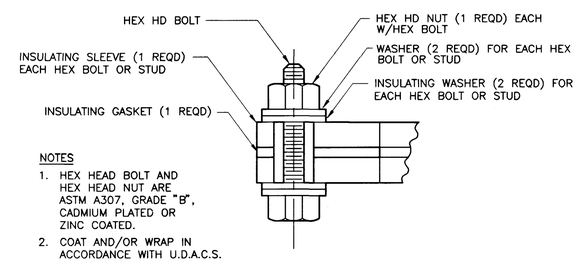

NOTES
1. HEX HEAD BOLT AND HEX HEAD NUT ARE ASTM A307, GRADE "B", CADMIUM PLATED OR ZINC COATED.
2. COAT AND/OR WRAP IN ACCORDANCE WITH U.D.A.C.S. SECTION 3.14

INSULATING FLANGE DETAIL (2)

NOT TO SCALE

APPROVED FOR CONSTRUCTION

Gregory P. Rodewin 11/4/98
LAS VEGAS VALLEY WATER DISTRICT DATE

REV	DATE	BY	REVISION
4	11/4/98	EES	REV PERMANENT JOINT

CYL CONSULTANTS, INC.
ENGINEERING PLANNING LAND SURVEYING
475 Cameron Street Suite A
Las Vegas, NV 89102
Tel (702) 368-2008
Fax: (702) 368-0047

THE GATES, L.L.C.
236 SOUTH RAINBOW BLVD.
SUITE 311
LAS VEGAS, NEVADA 89129

SHEET DETAIL SHEET

TITLE OFFSITE WATER PLANS LYNBROOK

DRAWN BY: BB,GH DATE 9/15/98
DESIGNED BY: BB DATE 9/15/98
CHECKED BY: MV DATE 5/19/98
PROJECT NO: 98902003 SCALE: AS NOTED

SEAL
PROFESSIONAL ENGINEER - STATE OF NEVADA
DARREN V. VANCE
No.10574
11/9/98

SHEET D2
18 OF 19 SHEETS
DRAWING NO.

11208 S1 12266

567Y-4576-0W

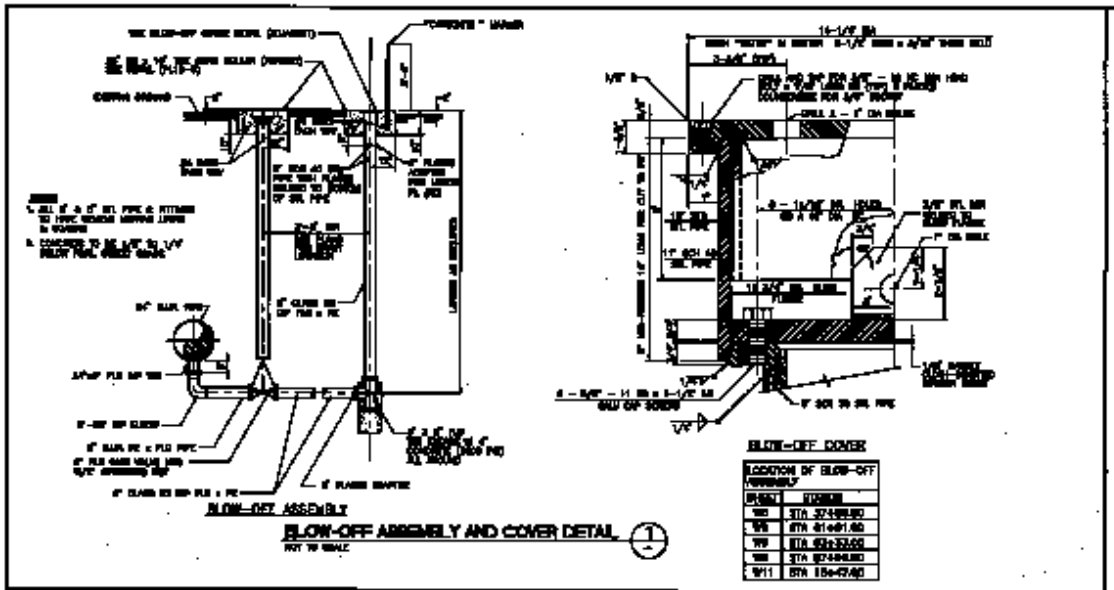

BLOW-OFF ASSEMBLY AND COVER DETAIL 1

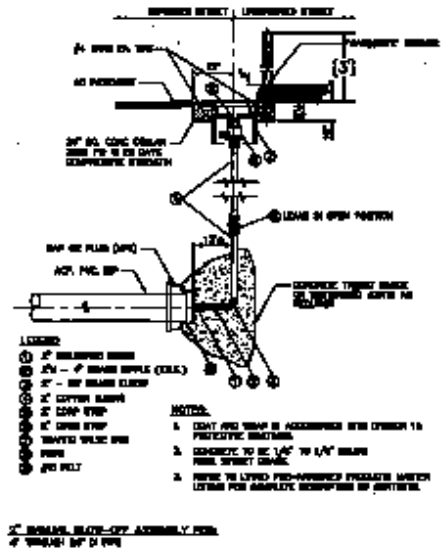

2" MANUAL AIR RELEASE ASSEMBLY

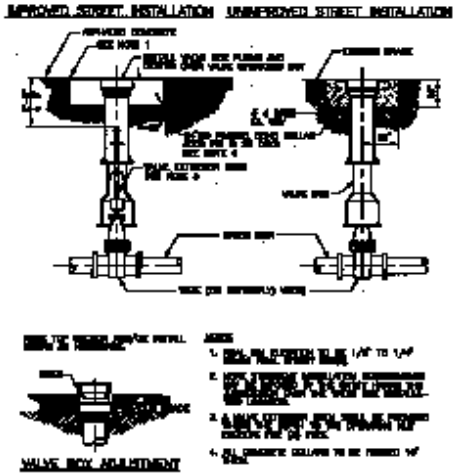

VALVE BOX INSTALLATION AND ADJUSTMENT 4

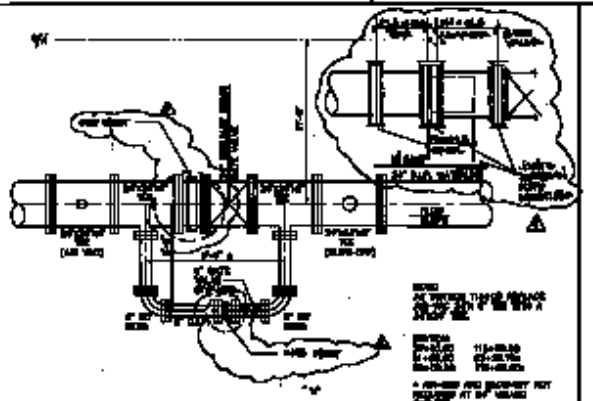

8" BYPASS DETAIL 5

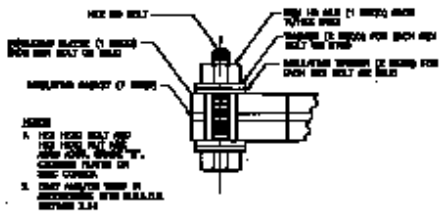

INSULATING FLANGE DETAIL 6

APPROVED FOR CONSTRUCTION

THE GATES, L.L.C.

DETAIL SHEET

OFFSITE WATER PLANS HANDBOOK

D2

8477-45-6-04