NOTES
IN IMPROVED AREAS CONTRACTOR TO REPLACE FULL SIDEWALK PANEL.
IN UNIMPROVED AREAS CONTRACTOR TO CONSTRUCT FORMED 2'-6" SQ x 10" THICK CONCRETE SLAB.

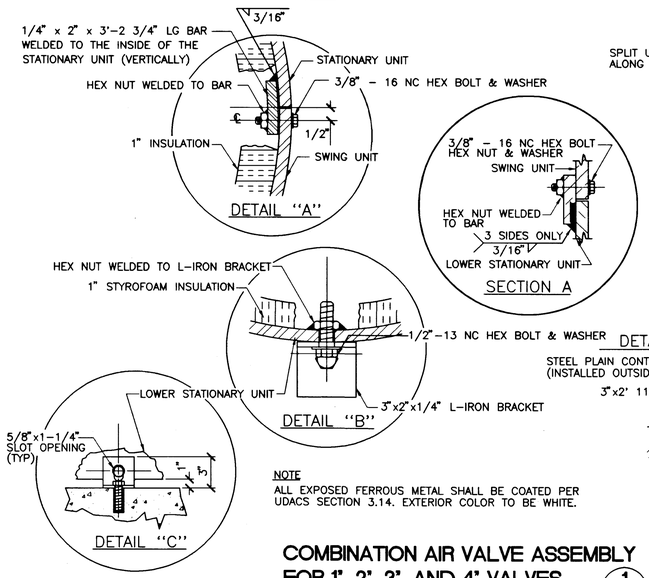

NOTE
ALL EXPOSED FERROUS METAL SHALL BE COATED PER UDACS SECTION 3.14. EXTERIOR COLOR TO BE WHITE.

COMBINATION AIR VALVE ASSEMBLY FOR 1", 2", 3", AND 4" VALVES (1/-)

ENGINEER TO DETERMINE VALVE SIZE
NOT TO SCALE

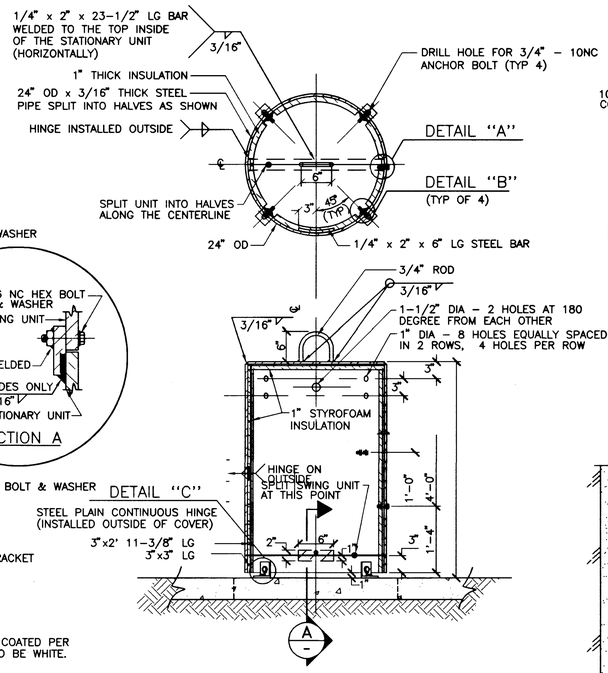

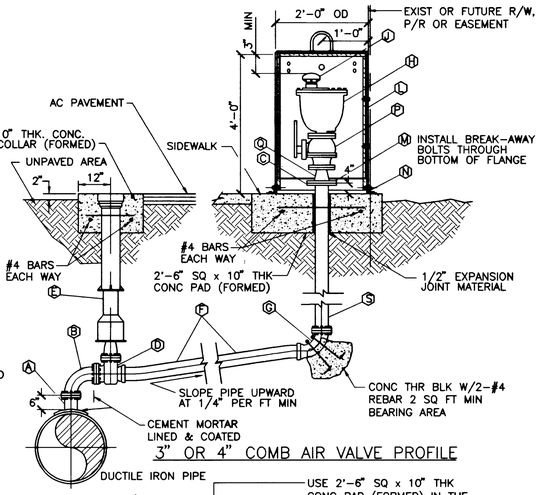

3" OR 4" COMB AIR VALVE PROFILE

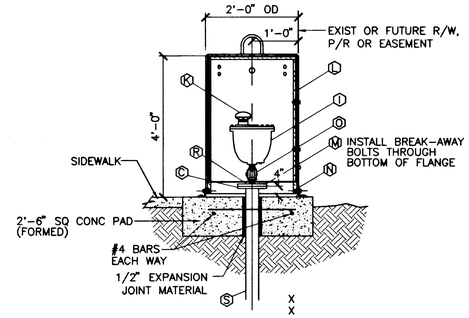

1" OR 2" COMB AIR VALVE PROFILE

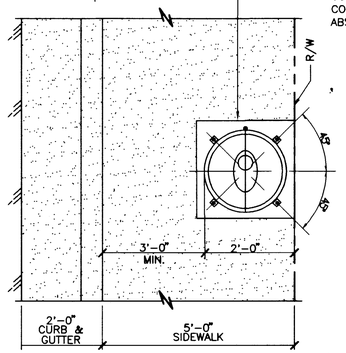

LOCATION OF COMBINATION AIR VALVE ASSEMBLY		
SHEET	STATION	SIZE
W1	STA 11+08.00	4
W1	STA 18+50.00	4
W2	STA 26+50.00	4
W3	STA 37+13.00	4
W6	STA 62+05.00	4
W6	STA 63+33.00	4
W8	STA 88+05.00	3
W11	STA 115+53.00	3

LEGEND

- (A) 4" FLG STL OUTLET FOR MLC STLPIPE, FLG TEE FOR DIP
- (B) 4"- 90° FLG DUCTILE IRON BEND
- (C) 4" DUCTILE IRON FLANGE ADAPTOR
- (D) 4" FLG x PO OR FLG x MJ GATE VALVE W/2" OPERATING NUT
- (E) VALVE BOX & COVER - SEE DETAIL (4/D2)
- (F) 4" DUCTILE IRON CL50 PIPE OR 4" PVC CL150 DR18 PIPE
- (G) 4" - 90° FLG x PO OR FLG x MJ CI BEND
- (H) 3" OR 4" COMBINATION AIR VALVE, FLANGED INLET
- (I) 1" OR 2" COMBINATION AIR VALVE, THREADED INLET
- (J) 3" OR 4" MUSHROOM FOR 4" OR 3" COMBINATION AIR VALVE ASSY
- (K) 1" OR 2" MUSHROOM FOR 2" OR 1" COMBINATION AIR VALVE ASSY
- (L) 2'-0" OD x 3'-6" HIGH STEEL COVER
- (M) 5/8"-11NC BREAK-AWAY ZINC PLATED HEX HD BOLT, HEX NUT AND LOCKWASHER
- (N) 1/2"-13NC x 2-1/2" LG "RED HEAD" ANCHOR BOLT INSTALLED OUTSIDE
- (O) 1" OR 2" CORP STOP, THREADED BOTH ENDS
- (P) 3" OR 4" BALL VALVE - QUARTER TURN - FOR 4" OR 3" COMB AIR VALVE ASSY
- (Q) 4" x 3" FLG DUCTILE IRON REDUCER - FOR 3" COMB AIR VALVE ASSY
- (R) 4" x 2" OR 4" x 1" THREADED STL REDUCING FLANGE
- (S) 4" DUCTILE IRON CL50 PIPE

NOTE SEE SPECIFICATIONS FOR ALL APPROVED PRODUCTS

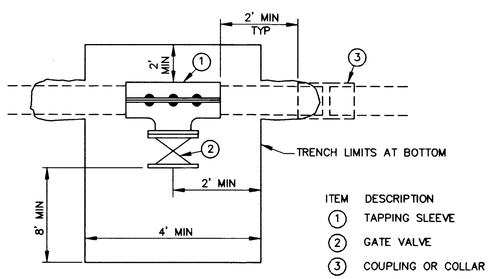

NOTES:

A. CLEARANCE FROM A COLLAR OR PIPE JOINT SHALL BE A MINIMUM OF 2 FEET FROM THE EDGE OF TAPPING SLEEVE TO COLLAR OR PIPE JOINT. THE EXISTING PIPE SHALL BE EXPOSED SUFFICIENTLY TO ENSURE THAT SUCH MINIMUM CLEARANCE IS PROVIDED.

B. TRENCH DEPTH OF 5 FEET AND OVER MUST HAVE NOSHA APPROVED SHORING AND A LADDER THAT EXTENDS A MINIMUM OF 3 FEET ABOVE THE EXISTING GROUND ELEVATION.

EXCAVATION FOR WET TAPS (3/-)

NOT TO SCALE

LEGEND

1. SERVICE LATERAL.
2. BALL ANGLE METER STOP WITH LOCK WING AND WITHOUT LEVER HANDLE.
3. METER BOX INSTALLED AS NEAR TO FUTURE FINAL GRADE AS POSSIBLE.
4. FORMED CONCRETE COLLAR.
5. SAND BACKFILL FULL WIDTH OF TRENCH.
6. SAMPLING STATION.

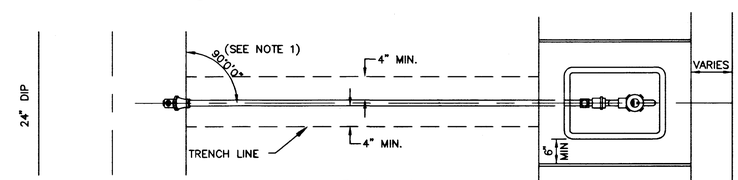

PLAN VIEW

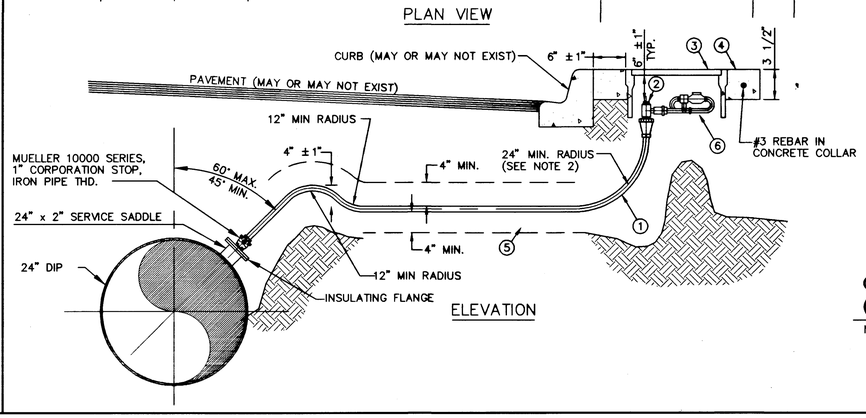

ELEVATION

NOTES

1. ONE ADDITIONAL FLARED COUPLING, OR COMPRESSION COUPLING IS ALLOWED BETWEEN THE CORPORATION STOP, AND THE ANGLE METER STOP IF THE DISTANCE IS MORE THAN 40'.
2. IF 24" MIN. RADIUS CAN NOT BE MAINTAINED AN APPROPRIATE SIZE 90° COMPRESSION OR FLARED CONNECTION SHOULD BE USED.

MATERIALS:

1. COPPER SERVICES LATERAL "TYPE K" ASTM B88
   2" TUBING AS MANUFACTURED BY "CERRO" COPPER PRODUCTS.
   "HALCTEAD" METAL PRODUCTS.
   "STREAMLINE" MUELLER BRASS CO.
   "READING" TUBE CORP.
2. ANGLE METER STOP WITH LOCK WING AND WITHOUT LEVER HANDLE
   "JONES" NO. J-1525F-INLET FLARED COPPER, OUTLET METER FLANGE - 1 1/2" & 2".
   "JONES" NO. J-4205-INLET COMPRESSION CONNECTION, OUTLET METER FLANGE - 1 1/2" & 2".
   "MUELLER" NO. H-14277-INLET COMPRESSION CONNECTION, OUTLET METER FLANGE - 1 1/2" & 2".
3. SERVICE METER BOXES
   "BROOKS" NO. 65 SERIES (17" X 28") WITH 65-TR STEEL TRAFFIC COVER AND CAST IRON. READING LID FOR 2" WATER METER.
   "JENSEN" 2" WATER METER BOX WITH STEEL TRAFFIC COVER AND READING LID.
4. CONCRETE COLLAR
   IN ACCORDANCE WITH UNIFORM STANDARD SPECIFICATION FOR PUBLIC WORKS CONSTRUCTION OFF-SITE IMPROVEMENTS, SECTION 501 TO BE 3,000 PSI TYPE V.
5. SAND BACKFILL
   IN ACCORDANCE WITH UNIFORM STANDARD SPECIFICATION FOR PUBLIC WORKS CONSTRUCTION OFF-SITE IMPROVEMENTS, SECTION 50208.02.03 SAND BACKFILL.
6. SAMPLING STATION
   CURTIS LAUGHLIN WATER PLUS CO. MODEL 1500 SAMPLE STATION AND LOCKING DEVICE WITH ZINC COATED CAP AND CHAIN.

CHLORINE MONITORING STATION (STATION 115+40.00) (2/-)

NOT TO SCALE

APPROVED FOR CONSTRUCTION
LAS VEGAS VALLEY WATER DISTRICT — DATE 11/4/98

REV	DATE	BY	REVISION

THE GATES, L.L.C.
236 SOUTH RAINBOW BLVD.
SUITE 311
LAS VEGAS, NEVADA 89129

CYL CONSULTANTS, INC.
ENGINEERING PLANNING LAND SURVEYING
4175 Cameron Street
Suite A
Las Vegas NV 89103
Tel (702) 367-5003
Fax (702) 369-0047

SHEET DETAIL SHEET
TITLE OFFSITE WATER PLANS LYNBROOK

DRAWN BY: BB,GH — DATE 5/11/98
DESIGNED BY: BB — DATE 5/11/98
CHECKED BY: MV — DATE 5/15/98
SCALE: AS NOTED
PROJECT NO: 98902003

SEAL: PROFESSIONAL ENGINEER - STATE OF NEVADA — WARREN BENCH — No. 10574 — 10/14/98

SHEET D1
17 OF 19 SHEETS
DRAWING NO.

11207

567Y-4576-OW

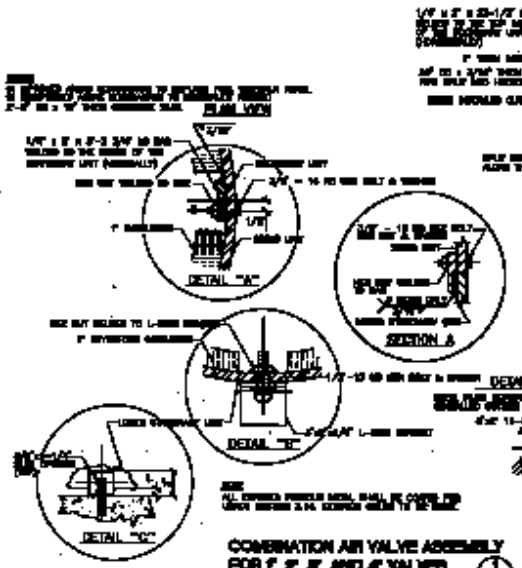

COMBINATION AIR VALVE ASSEMBLY FOR 1", 2", 3", AND 4" VALVES

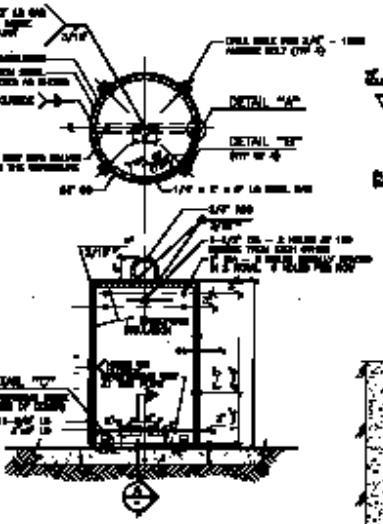

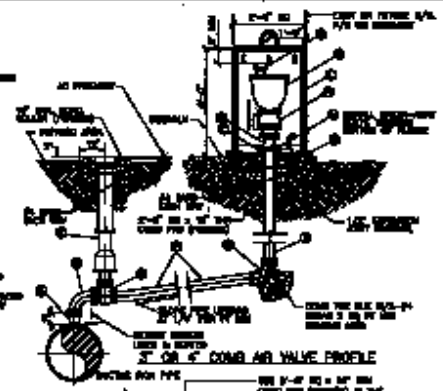

3" OR 4" COMB AIR VALVE PROFILE

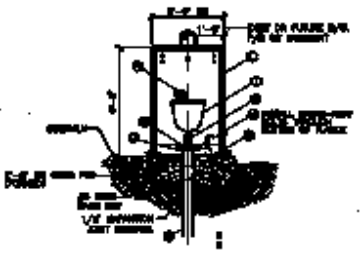

1" OR 2" COMB AIR VALVE PROFILE

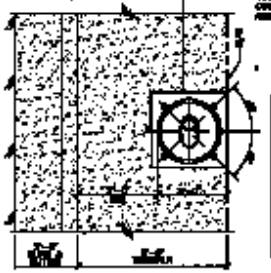

LOCATION OF COMBINATION AIR VALVE ASSEMBLY		
SHEET	STATION	SIZE
W1	6BA 11+65.00	4
W1	3BA 18+90.00	4
W2	6BA 23+80.00	4
W3	3BA 32+13.00	4
W6	3BA 55+60.00	4
W8	6BA 81+20.00	4
W9	3BA 89+60.00	3
W11	6BA 115+65.00	2

LEGEND

- 4" PVC BAL SPIGOT FOR AIR RELEASE, PAR TOC FOR 90°
- 4"— 90° PVC CLEANOUT FOR BEND
- 4" DUCTILE IRON FLANGE ADAPTER
- 4" PVC x PVC OR PVC x ALL IRON VALVE BOX OPERATOR ARM
- VALVE BOX & COVER — SEE DETAIL
- 4" DUCTILE IRON BURIED PIPE OR 4" PVC BURIED IRON PIPE
- 4" — 90° PVC x PVC OR PVC x BELL OR IRON
- 3" OR 4" COMBINATION AIR VALVE, FLANGED PORT
- 1" OR 2" COMBINATION AIR VALVE, THREADED PORT
- 2" OR 4" CONNECTION PIPE 4" OR 2" ACCUMULATOR PIPE WELDED JOINT
- 1" OR 2" CONNECTION PIPE 2" OR 1" ACCUMULATOR PIPE WELDED JOINT
- 2'-0" SQ x 2'-0" HIGH STEEL COVER
- 3/4"—0.150 BRASS-BODY ZINC PLATED HEX HD STEEL BOLT WITH LOCKWASHER
- 1/4"—0.250 x 2-1/2" LG "THIN BODY" ANCHOR BOLT PARALLEL SPRING
- 1" OR 2" SCRAP TANK, THREADED IRON TANK
- 3" OR 4" BALL VALVE — GARDEN TYPE — FOR 4" OR 3" COMB AIR VALVE ASSY
- 4" x 3" PVC CLEANOUT FOR PRESSURE — FOR 3" VALVE AIR VALVE ASSY
- 4" x 4" OR 4" x 4" THREADED OIL RESISTANT FLANGE
- 4" DUCTILE IRON BURIED PIPE

NOTE: SEE SPECIFICATIONS FOR ALL APPROVED PRODUCTS

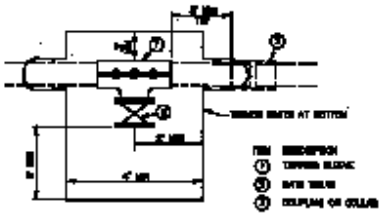

ITEM	DESCRIPTION
1	TAPPING SLEEVE
2	GATE VALVE
3	COUPLING OR COLLAR

NOTES:

A. OPTIONAL ITEM 3 SHALL BE ONE-PART SHELL. [illegible]

B. [illegible]

EXCAVATION FOR WET TAPS

NOT TO SCALE

LEGEND

1. [illegible]
2. [illegible]
3. [illegible]
4. [illegible]
5. [illegible]
6. [illegible]
7. [illegible]

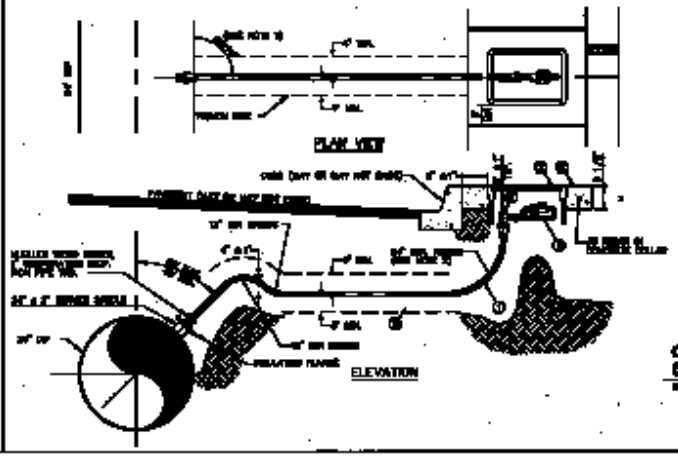

NOTES:

1. [illegible]
2. [illegible]

MATERIALS:

1. [illegible]
2. [illegible]
3. [illegible]
4. [illegible]
5. [illegible]
6. [illegible]

CHLORINE MONITORING STATION

STATION 10+40.00

NOT TO SCALE

APPROVED FOR CONSTRUCTION

[illegible]

TRUE GARDEN, L.L.C.

DETAIL SHEET

OCTOBER WATER PLANS

LYNDEBROOK

[illegible]

[illegible]

[illegible]