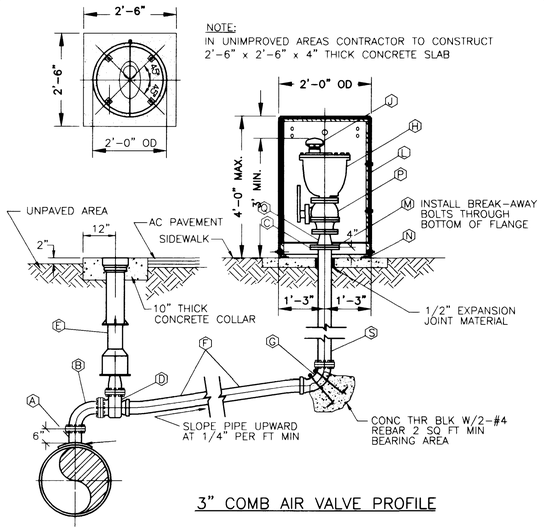

NOTE:
IN UNIMPROVED AREAS CONTRACTOR TO CONSTRUCT 2'-6" x 2'-6" x 4" THICK CONCRETE SLAB

3" COMB AIR VALVE PROFILE

LEGEND

- (A) 16"x4" TEE
- (B) 4"- 90° FLG DUCTILE IRON ELBOW
- (C) 4" DUCTILE IRON FLANGE ADAPTOR
- (D) 4" FLG x PO OR FLG x MJ GATE VALVE W/2" OPERATING NUT
- (E) VALVE BOX & COVER
- (F) 4" DUCTILE IRON CL50 PIPE OR 4" PVC CL150 DR18 PIPE
- (G) 4" – 90° FLG x PO OR FLG x MJ CI ELBOW
- (H) 3" COMBINATION AIR VALVE, FLANGED INLET AND OUTLET
- (I) N/A
- (J) 3" MUSHROOM FOR 3" COMBINATION AIR VALVE ASSY
- (K) N/A
- (L) 24" OD x 3'-6" HIGH STEEL COVER
- (M) 5/8"-11NC BREAK-AWAY ZINC PLATED HEX HD BOLT, HEX NUT AND LOCKWASHER
- (N) 1/2"-13NC x 2-1/2" LG "RED HEAD" ANCHOR BOLT INSTALLED INSIDE
- (O) N/A
- (P) 3" BALL VALVE – QUARTER TURN
- (Q) 4"X3" FLG DUCTILE IRON REDUCER
- (R) N/A
- (S) 4" DUCTILE IRON CL50 PIPE

NOTE SEE SPECIFICATIONS FOR ALL APPROVED PRODUCTS

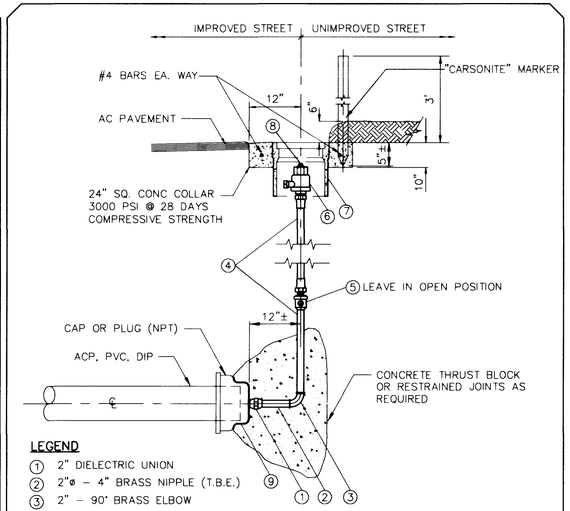

LEGEND

1. 2" DIELECTRIC UNION
2. 2"ø – 4" BRASS NIPPLE (T.B.E.)
3. 2" – 90° BRASS ELBOW
4. 2" COPPER TUBING
5. 2" CORP STOP
6. 2" CURB STOP
7. TRAFFIC VALVE BOX
8. PLUG
9. #15 FELT

NOTES:

1. COAT AND WRAP IN ACCORDANCE WITH DIVISION 15 PROTECTIVE COATINGS.
2. CONCRETE TO BE 1/8" TO 1/4" BELOW FINAL STREET GRADE.
3. REFER TO LVVWD PRE-APPROVED PRODUCTS MASTER LISTING FOR COMPLETE DESCRIPTION OF CONTENTS.
4. ALL MATERIALS SHALL BE IN ACCORDANCE WITH THE SPECIFICATIONS.

2" MANUAL BLOW-OFF ASSEMBLY FOR:

4" THROUGH 20" AC PIPE
4" THROUGH 12" PVC PIPE
4" THROUGH 20" DI PIPE

2" MANUAL AIR RELEASE ASSEMBLY (ALTERNATE METHOD)

NOT TO SCALE PL10-3 102797

1 / –

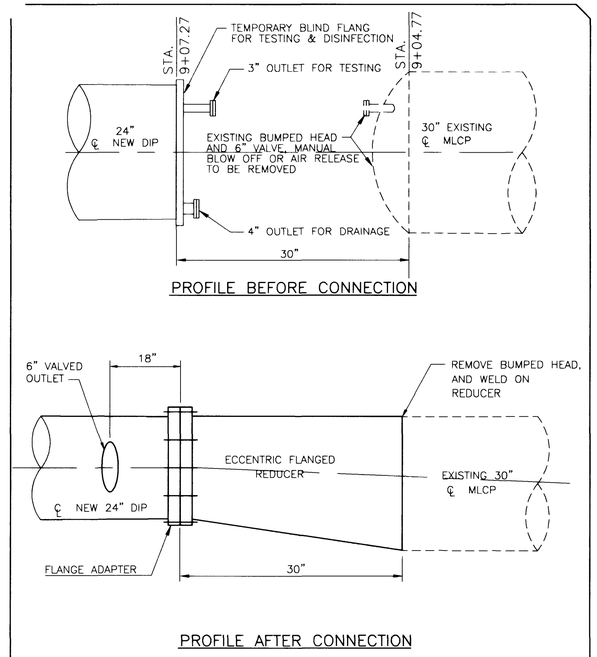

PROFILE BEFORE CONNECTION

PROFILE AFTER CONNECTION

CONNECTION OF NEW PIPE TO EXISTING PIPE

NOT TO SCALE

2 / –

NOTE:
EXCEPT AS OTHERWISE SPECIFIED OR SHOWN ON THE DRAWINGS, ALL FLANGES TO BE INSTALLED ON PIPE OR FITTINGS SHALL BE FACED AND DRILLED IN ACCORDANCE WITH 150 LB. ASA DIMENSIONS, OR IN LIEU THEREOF, SHALL BE IN ACCORDANCE WITH THE "STANDARD FOR STEEL PIPE FLANGES FOR WATERWORKS SERVICE" (AWWA C 207, CLASS D OR CLASS E AS APPLICABLE). ALL FLANGES SHALL BEE FURNISHED WITH FLAT FACES ALL PIPE FLANGES SHALL BE ATTACHED WITH BOLT HOLES STRADDLING THE VERTICAL AXIS OF THE PIPE UNLESS OTHERWISE SHOWN ON THE DRAWINGS. ATTACHMENT OF THE FLANGES TO THE PIPE SHALL CONFORM TO THE APPLICABLE REQUIREMENTS OF THE "STANDARD FOR STEEL PIPE FLANGES FOR WATERWORKS SERVICE" (AWWA C207).

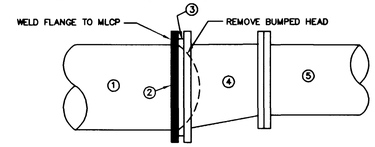

1. EXIST. 30" MLCP
2. 30" STEEL FLANGE
3. INSULATING GASKET PER UDS PLATE NO. 33
4. 30"x24" DIP REDUCER (ECCENTRIC)
5. 24" DIP (FLANGED ONE END ONLY)

MLCP - DIP CONNECTION DETAIL

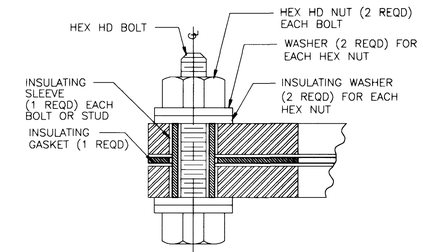

NOTES

1. BOLT AND HEX HD NUT ARE ASTM A307, GRADE "B", CADMIUM PLATED OR ZINC COATED.
2. COAT AND/OR WRAP IN ACCORDANCE WITH DIVISION 15.

INSULATING FLANGE DETAIL

NOT TO SCALE

3 / –

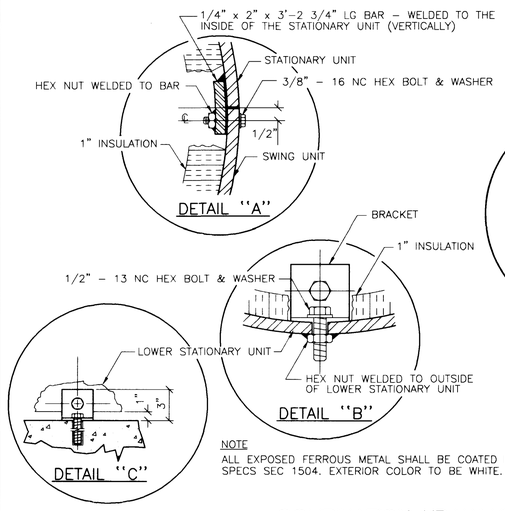

NOTE
ALL EXPOSED FERROUS METAL SHALL BE COATED PER SPECS SEC 1504. EXTERIOR COLOR TO BE WHITE.

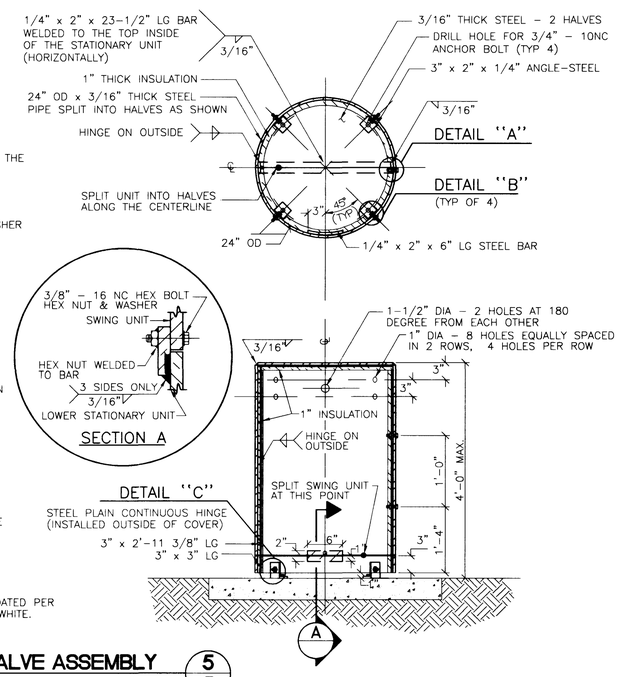

COMBINATION AIR VALVE ASSEMBLY FOR 3" VALVES

NOT TO SCALE

5 / 5

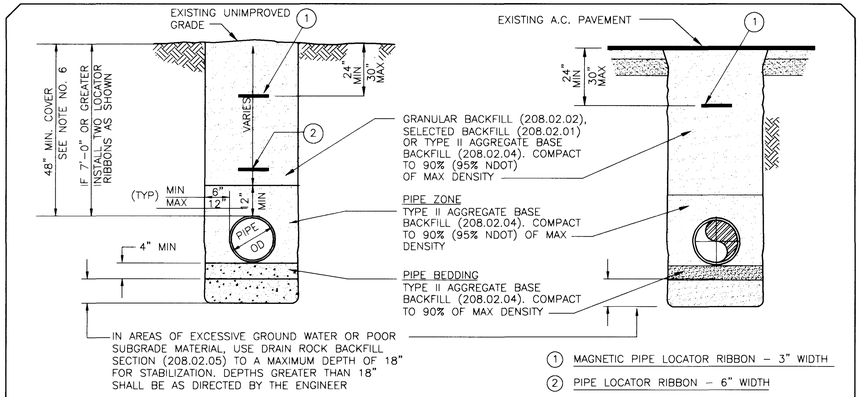

1. MAGNETIC PIPE LOCATOR RIBBON – 3" WIDTH
2. PIPE LOCATOR RIBBON – 6" WIDTH

NOTES FOR PAVED AND UNPAVED AREAS

1. ACCEPTABLE METHODS OF COMPACTION:

   A. BEDDING AND PIPE ZONE AREAS:
   FLOODING AND JETTING OR MECHANICAL COMPACTION (NEVADA DEPARTMENT OF TRANSPORTATION RIGHT OF WAY MECHANICAL COMPACTION ONLY.)

   B. ABOVE PIPE ZONE:
   FLOODING AND JETTING OR MECHANICAL COMPACTION IN UNPAVED AREAS. MECHANICAL COMPACTION IN PAVED AREAS. (NEVADA DEPARTMENT OF TRANSPORTATION RIGHT OF WAY MECHANICAL COMPACTION ONLY.)

2. TRENCH EXCAVATION SHALL COMPLY WITH THE CURRENT REGULATIONS AS DETERMINED BY NEVADA OCCUPATIONAL SAFETY AND HEALTH ADMINISTRATION.
3. REFERENCE: UNIFORM STANDARD SPECIFICATIONS FOR PUBLIC WORKS, CONSTRUCTION OF OFF-SITE IMPROVEMENTS CLARK COUNTY AREA, NEVADA, LATEST EDITION.
4. THE MINIMUM COVER IS REFERENCED TO FUTURE FINISHED FINAL GRADES UNLESS OTHERWISE SHOWN ON PROFILE DRAWINGS.
5. CENTER PIPE LOCATOR RIBBON IN TRENCH AND PLACE OVER ENTIRE LENGTH OF ALL TYPES, SIZES AND LOCATIONS OF WATER MAINS
6. FOR NOMINAL PIPE DIAMETERS 12" OR LESS A 42" MINIMUM COVER IS ALLOWED.

PAVED AND UNPAVED AREAS TRENCH SECTION BACKFILL SPECIFICATION

NOT TO SCALE

6 / –

CITY OF LAS VEGAS FIRE DEPARTMENT — DATE 4-16-98

LAS VEGAS VALLEY WATER DISTRICT — DATE 9/16/98

NO.	DESCRIPTION	DATE	APP'D

DATE :	03/16/98
TIME :	
DRAWN BY :	KA
DESIGNED BY :	LP
CHECKED BY :	M.R.W.
JOB NO. :	0158.0001
SCALE :	NONE

PENTACORE
CIVIL ENGINEERING • LAND SURVEYING • PLANNING
CONSTRUCTION MANAGEMENT • ADA CONSULTING
5275 WEST SAHARA AVENUE, SUITE 100
LAS VEGAS, NEVADA 89102 (702)258-0115

MOUNTAIN SPA DEVELOPMENT, INC.
MOUNTAIN SPA DR. PIPELINE PHASE 1

MISCELLANEOUS DETAILS

REGISTERED PROFESSIONAL ENGINEER — MYRON R. WELSH — STATE OF NEVADA — 2646 — CIVIL — 9/14/98

SHEET 5 OF 7

G:\0158\MLCP\Mnt-w6.dwg Fri Sep 11 11:17:13 1998 JP Donalson

MNT-W6.DWG

12277

5679-4344-OW

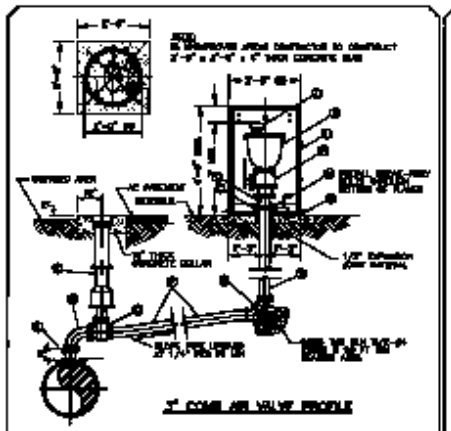

2" COMB. AIR VALVE PROFILE

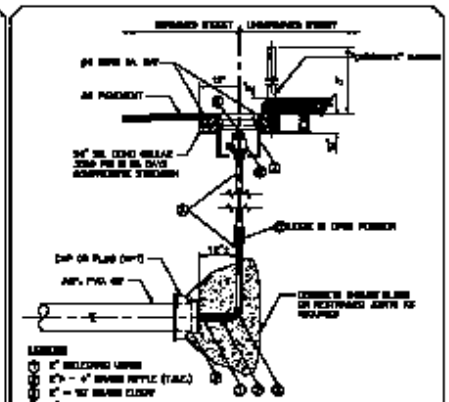

2" MANUAL AIR RELEASE ASSEMBLY (ALTERNATE METHOD)

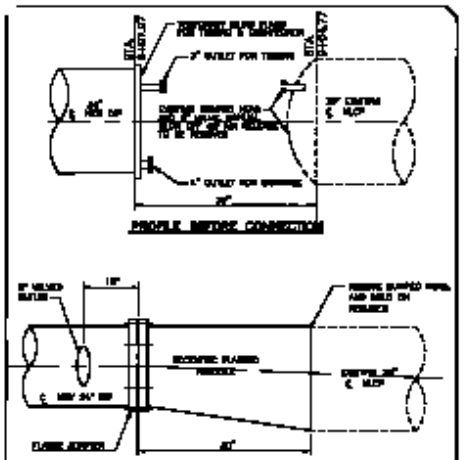

PROFILE BEFORE CONNECTION

PROFILE AFTER CONNECTION

CONNECTION OF NEW PIPE TO EXISTING PIPE

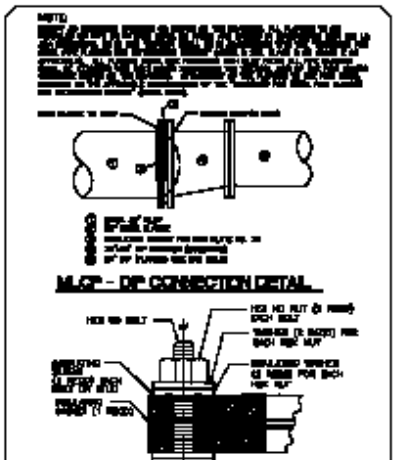

M.J.C.P. - DIP CONNECTION DETAIL

INSULATING FLANGE DETAIL

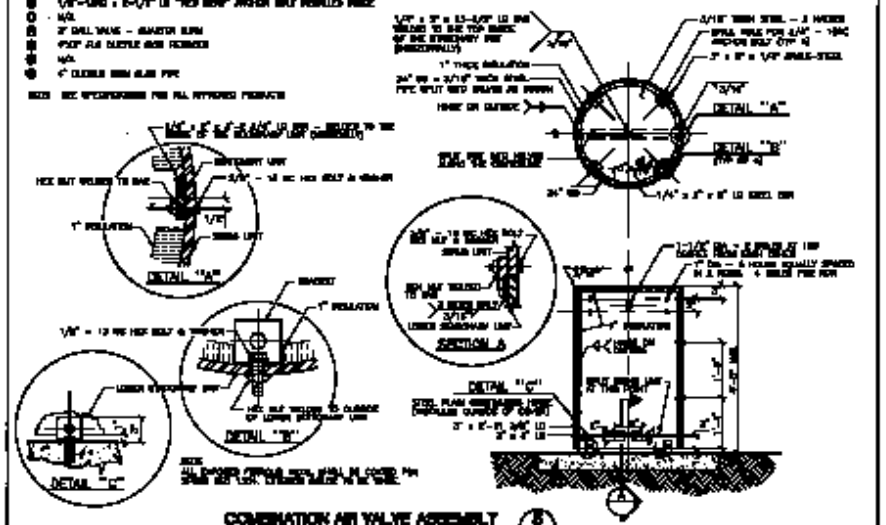

COMBINATION AIR VALVE ASSEMBLY FOR 8" VALVES

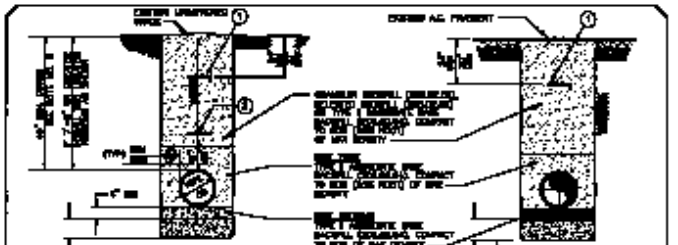

NOTES FOR PAVED AND UNPAVED AREAS

PAVED AND UNPAVED AREAS TRENCH SECTION BACKFILL SPECIFICATION

CITY OF LAS VEGAS FIRE DEPARTMENT — DATE

LAS VEGAS VALLEY WATER DISTRICT — DATE

PENTACORE

MOUNTAIN SPA DEVELOPMENT, INC.
MOUNTAIN SPA DR. PIPELINE PHASE 1

INSTALLATION DETAILS

SHEET 5