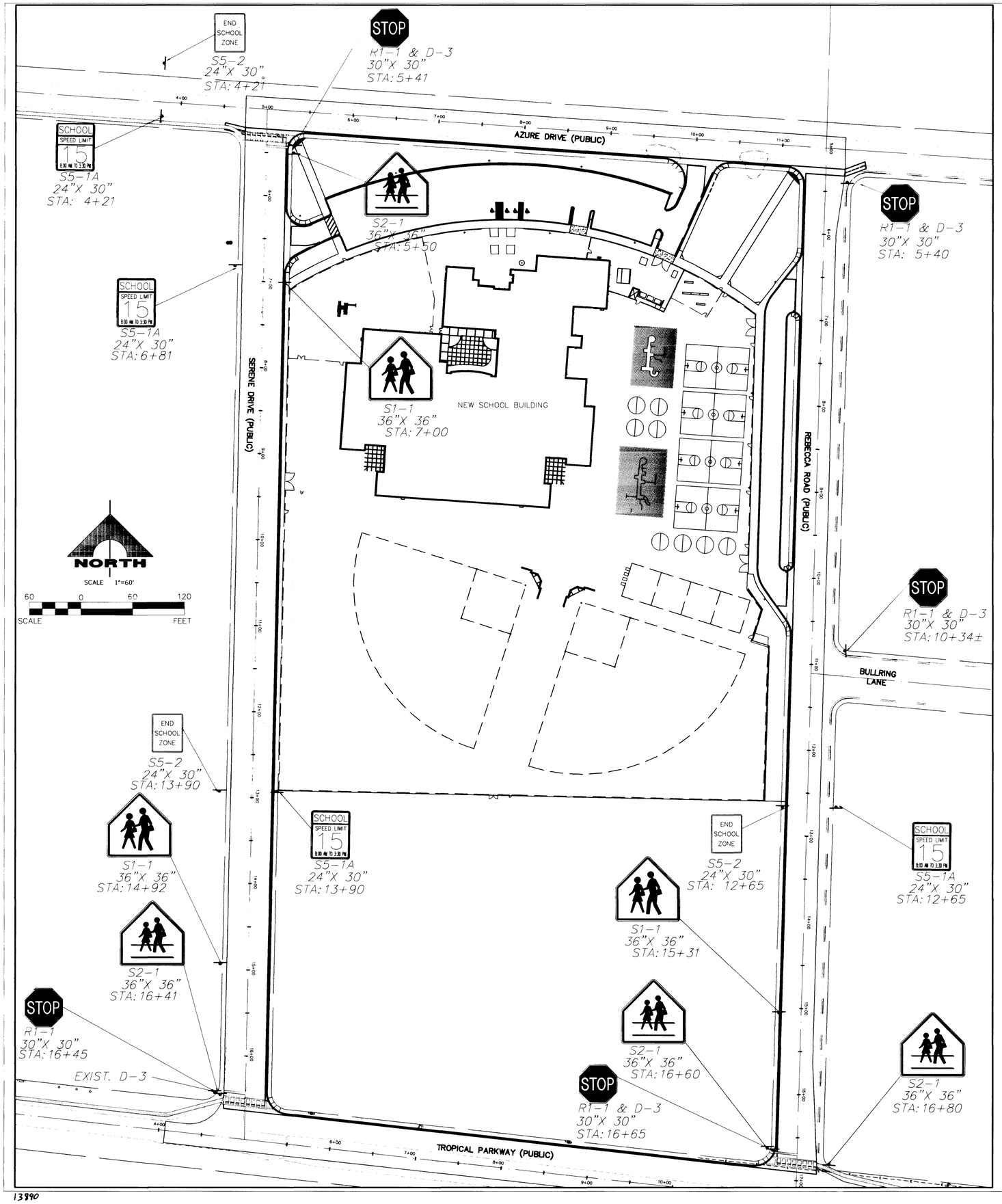

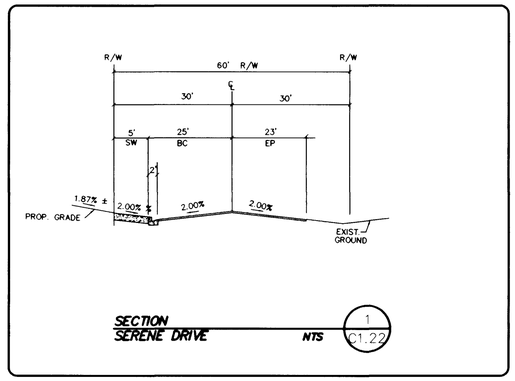

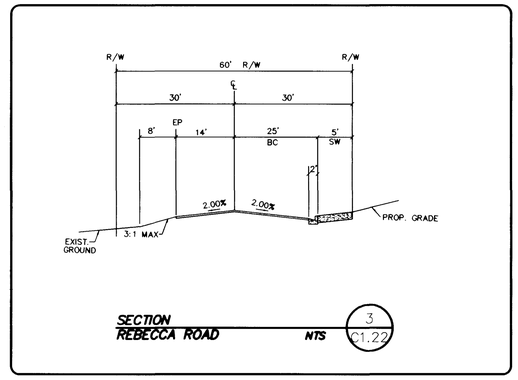

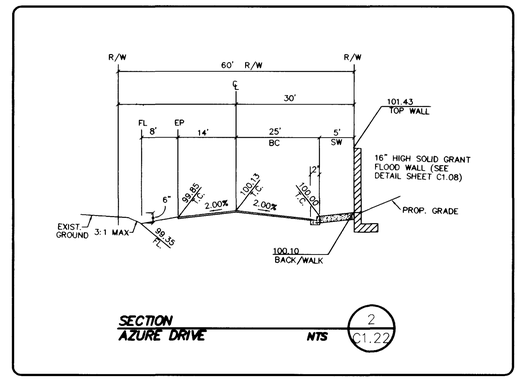

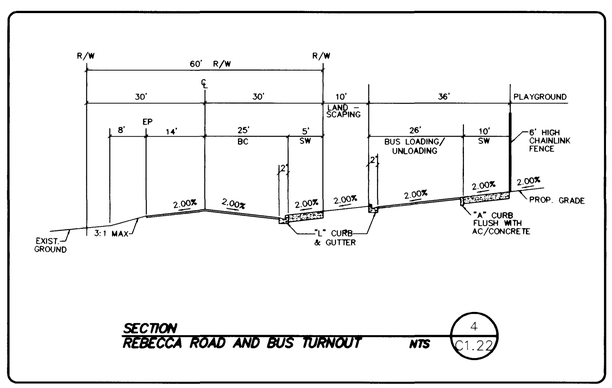

REVISIONS

REV	DESCRIPTION	DATE	BY

DO NOT SCALE DRAWINGS

All designs, arrangements and plans indicated or presented by this drawing, as instruments of service, are owned by and the property of the ARCHITECTS. To alter these documents for any project by anyone other than the original architect is a violation of NRS 623. The plans and/or specifications shall be restricted to the original site for which they were prepared and publication thereof is expressly limited to such use. Reproduction, publication or re-use by any method in whole or in part, is prohibited. None of such designs, arrangements or plans shall be used by or disclosed to any person, firm, agency, or corporation without the written permission of ARCHITECTS. Visual contact with these plans and specifications shall constitute prima facie evidence of acceptance of these restrictions.

SEAL

REGISTERED PROFESSIONAL ENGINEER-STATE OF NEVADA
DONALD A. HASELHOFF
CIVIL
No. 15030
7/14/99

CCSD PROJECT NO.
CCSD REVIEW
APPROVED BY
DATE

DATE
DRAWN BY KIM SIMPSON
CHECKED BY BOB HERMAN
SUBMITTAL
A/E PROJECT NO. 97224

G.C. WALLACE, INC.
Engineering/Architecture
1555 SOUTH RAINBOW BLVD./LAS VEGAS, NEVADA 89146
PHONE: (702)-804-8800

JMA ARCHITECTURE STUDIOS
4295 SOUTH MARYLAND PARKWAY
2033

CLARK COUNTY SCHOOL DISTRICT

CONSTRUCTION MANAGEMENT
4828 PEARL ST.
LAS VEGAS, NEVADA 89121

JOSEPH M. NEAL ELEMENTARY SCHOOL

SIGNAGE AND SECTION DETAIL SHEET

SHEET NO.

C1.22

22 OF 22

715-106

13890

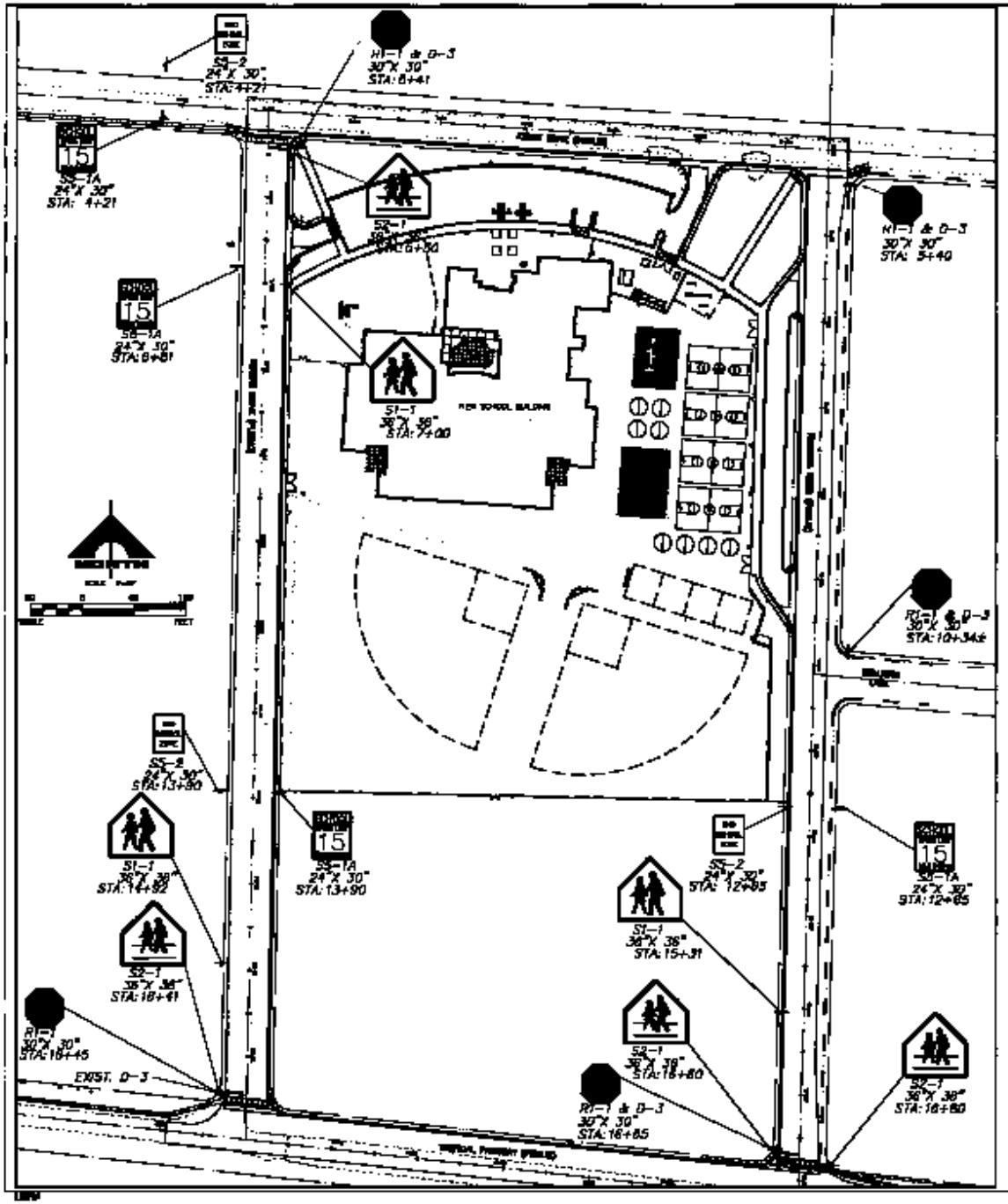

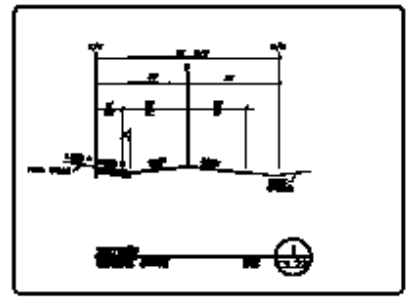

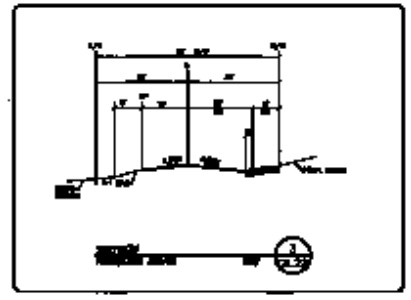

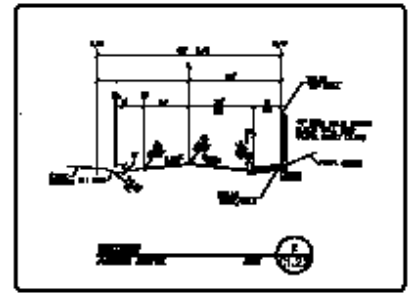

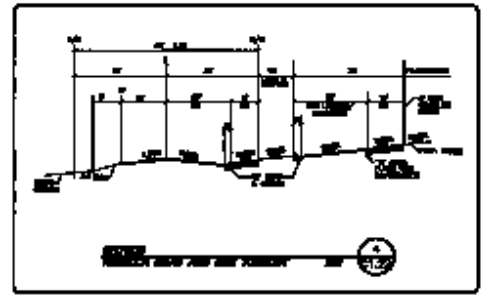

REVISIONS

NO.	DESCRIPTION	DATE	BY

DO NOT SCALE DRAWINGS

THE ARCHITECTURAL WORK, DESIGN, DRAWINGS AND SPECIFICATIONS AS INSTRUMENTS OF SERVICE ARE THE PROPERTY OF THE ARCHITECT AND SHALL NOT BE USED FOR ANY PURPOSE NOT SPECIFICALLY AGREED TO IN WRITING BY THE ARCHITECT.

JBA ARCHITECTURE

CLARK COUNTY SCHOOL DISTRICT
CONSTRUCTION MANAGEMENT
4180 POWER, SE.
LAS VEGAS, NEVADA 89121

JOSEPH M. NEAL ELEMENTARY SCHOOL

SIGNAGE AND SECTION DETAIL SHEET

SHEET NO.
CL22
22 OF 22
718-106