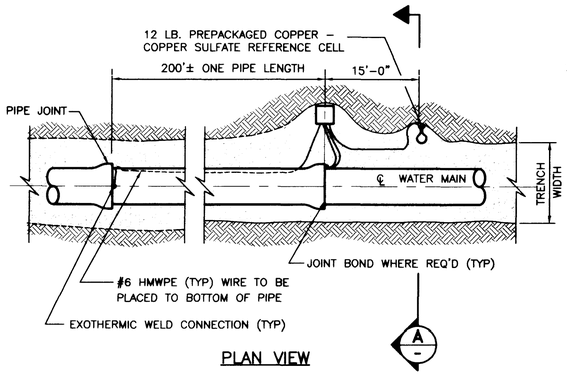

PLAN VIEW

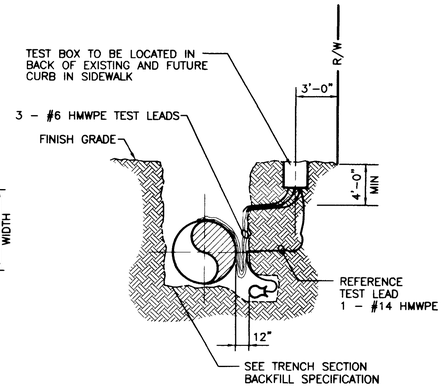

SECTION A

APPROXIMATE PIPELINE STATIONING OF TEST STATIONS					
SHEET NO	STATION	LOCATION	SHEET NO	STATION	LOCATION
C1	15+00	CENTER MEDIAN	C9	105+00	CENTER MEDIAN
C2	25+00	CENTER MEDIAN	C10	115+00	EAST SIDE SIDEWALK
C3	35+00	CENTER MEDIAN	C11	125+00	EAST SIDE SIDEWALK
C3	45+00	CENTER MEDIAN	C12	135+00	EAST SIDE SIDEWALK
C4	55+00	CENTER MEDIAN	C13	145+00	EAST SIDE SIDEWALK
C5	65+00	CENTER MEDIAN	C14	155+00	EAST SIDE SIDEWALK
C6	75+00	CENTER MEDIAN	C15	165+00	EAST SIDE SIDEWALK
C7	85+00	CENTER MEDIAN	C16	175+00	EAST SIDE SIDEWALK
C8	95+00	CENTER MEDIAN	C16	185+00	EAST SIDE SIDEWALK

NOTES

1 USE ONLY NATIVE SOIL FREE OF ROCKS AND CLODS FOR BACKFILL AROUND CELLS WITH A MINIMUM OF 5 GALS OF WATER SATURATION DURING INSTALLATION. DO NOT USE SAND AS BACKFILL.

2 SUPPLY ENOUGH WIRE FROM EACH LEAD TO REACH FULL R/W WIDTH PLUS FIVE (5) ADDITIONAL FEET. COIL WIRE IN BOTTOM OF BOX.

TEST STATION INSTALLATION WITHOUT ANODES (1)

NOT TO SCALE

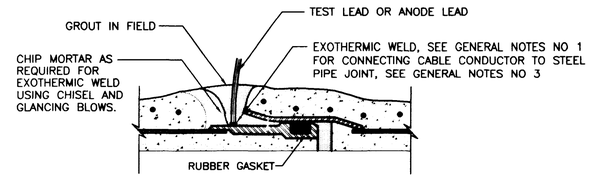

NOTE

FOR WELDED JOINT, ATTACH TEST LEAD OR ANODE LEAD BY EXOTHERMIC WELD TO THE EXPOSED STL END OF PIPE.

TEST LEAD OR ANODE LEAD CONNECTION TO PIPE JOINT CARNEGIE OR ROLLED-GROOVE DETAIL (4)

NOT TO SCALE

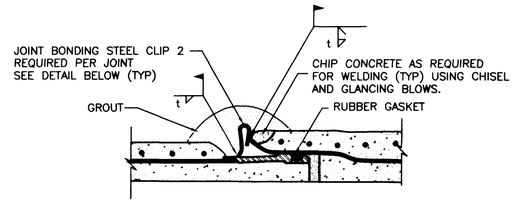

CARNEGIE JOINT BONDING DETAIL (5)

NOT TO SCALE

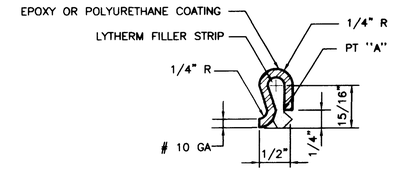

1 STEEL BONDING CLIP:
MATERIAL SPECIFICATION...ASTM A366 (COMMERCIAL QUALITY)
CUT LENGTH.....2 1/2" ± 1/16"
WIDTH.....1 1/4" ± 1/16"

2 LYTHERM FILLER STRIP TO BE 1' x 1 1/2" WIDE TO OVERLAP SIDES OF CLIP

3 CRIMP THE STEEL JOINT BONDING CLIP OVER THE LYTHERM FILLER STRIP AT PT "A" TO COMPRESS THE FILLER MATERIAL. CLOSE THE CAP AT PT "A" AS MUCH AS POSSIBLE WITHOUT CUTTING THE LYTHERM FILLER STRIP

4 IF THE LYTHERM FILLER STRIP IS CUT AT PT "A" REMOVE THE ENTIRE STRIP AND REPLACE WITH A NEW LYTHERM FILLER STRIP PER THIS DETAIL

5 INSTALL THE STEEL BONDING CLIPS ALONG THE TOP PORTION OF THE PIPE

BONDING CLIP DETAIL (6)

NOT TO SCALE

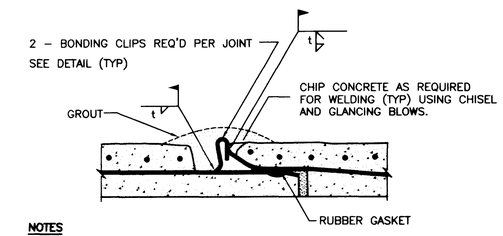

NOTES

1 JOINT BONDING IS REQUIRED AT ALL BELL AND SPIGOT RUBBER GASKET JOINTS EXCEPT FOR FIELD WELDED JOINTS.

2 FOR JOINT BONDING INSTALLATIONS USING STRANDED COPPER BONDING CABLES MAINTAIN 4 TO 6 INCHES OF SLACK MIN. THE BONDING CABLE BETWEEN POINTS OF ATTACHMENT.

ROLLED - GROOVE JOINT BONDING DETAIL (7)

NOT TO SCALE

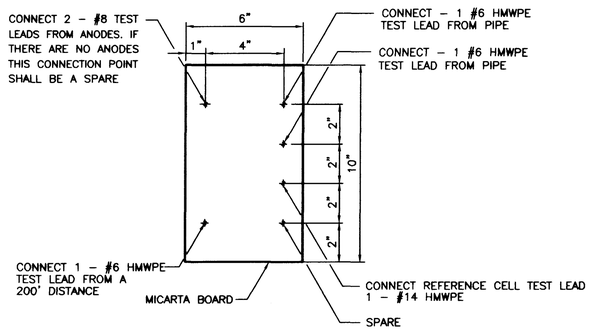

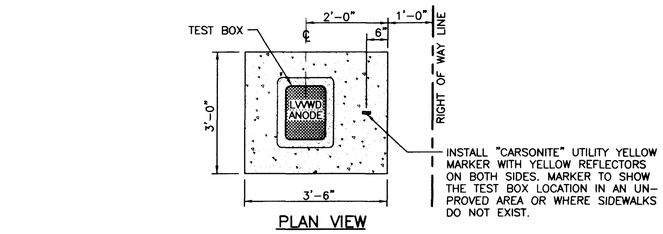

PLAN VIEW

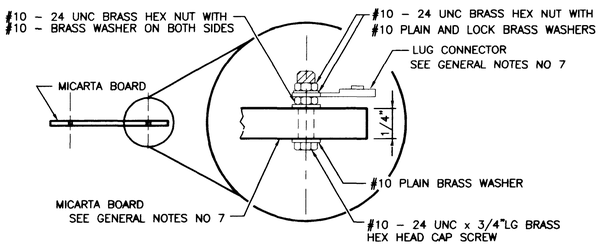

TEST BOARD DETAIL - TYPICAL (3)

NOT TO SCALE

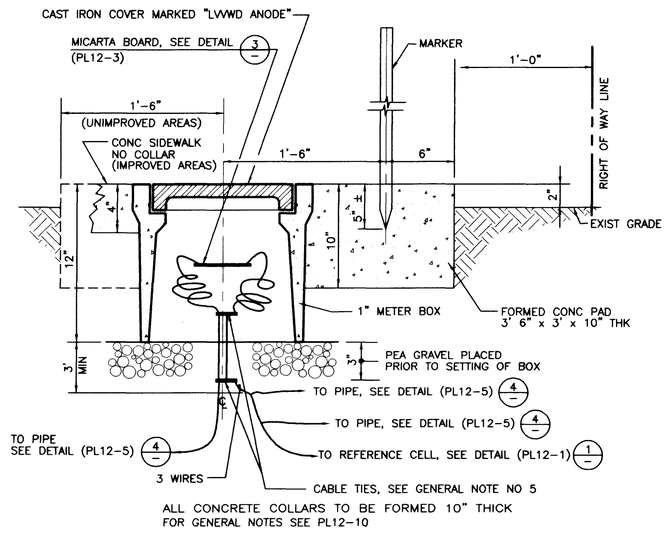

ALL CONCRETE COLLARS TO BE FORMED 10" THICK
FOR GENERAL NOTES SEE PL12-10

TEST BOX DETAIL - TYPICAL (2)

NOT TO SCALE

GENERAL NOTES : FOR STEEL MLC STEEL PIPE ONLY

1 ALL TEST LEADS AND ANODE LEADS SHALL BE ATTACHED TO THE STEEL CYLINDER OF THE PIPE BY MEANS OF A "CADWELD" EXOTHERMIC WELD.

2 ALL TEST LEADS AND ANODE LEADS SHALL BE ATTACHED TO EITHER THE PIPELINE'S BELL END, SPIGOT END OR PLAIN END AS SHOWN ON THE DRAWING.

3 ALL EXPOSED PORTIONS OF THE EXOTHERMIC WELD AND COPPER CABLE CONDUCTORS SHALL BE COATED WITH A SCOTCHCOAT 4 INSULATING RESIN PRIOR TO PLACING GROUT AROUND THE PIPELINE JOINT.

4 ALL TEST LEADS AND ANODE LEADS SHALL BE RUN WITHOUT SPLICES FROM THE CONNECTION AT THE PIPE TO THE CONNECTION AT THE TEST STATION BOX.

5 ALL TEST LEADS AND ANODE TEST LEADS INSIDE THE TEST BOX SHALL BE BUNDLED TOGETHER AT 8 INCH INTERVALS WITH NYLON CABLE TIES. ALL TEST STATION LEADS SHALL BE PROVIDED WITH SUFFICIENT SLACK SO THAT THE TEST BOARD MAY BE EXTENDED A MINIMUM OF 4 FEET ABOVE THE TEST BOX.

6 ALL TEST LEADS AND ANODE LEADS SHALL BE COLOR CODED WITH COLORED TAPE AT EACH END AND AT 4 FOOT INTERVALS. COLOR CODE SHALL BE AS FOLLOWS:
TEST STATION LEADS FROM PIPE – WHITE
REFERENCE CELL TEST LEADS – RED
ANODE TEST LEADS – GREEN
200' TEST LEAD – BLUE

7 ALL TEST LEADS AND ANODE LEADS SHALL BE CONNECTED TO THE BRASS BOLTS ON THE TEST BOARD WITH SOLDERLESS SCREW TIGHT COPPER LUG CONNECTORS OR PRESSURE TERMINAL CONNECTORS.

8 ALL TEST LEADS AND ANODE TEST LEADS SHALL HAVE A MINIMUM OF 4' OF SLACK NEAR THE PIPE JOINT TO PREVENT DAMAGE DURING THE BACKFILL OPERATION.

9 ALL TEST LEADS AND ANODE TEST LEADS SHALL BE PLACED ALONG THE SIDE AND BELOW THE SPRINGLINE OF THE PIPE.

LAS VEGAS VALLEY WATER DISTRICT
GREELEY AND HANSEN
ENGINEERS
4625 SOUTH POLARIS AVENUE, SUITE 210
LAS VEGAS, NEVADA 89103

VERIFY SCALE
1/2 0 1/2 1
BAR REPRESENTS ONE INCH ON HALF INCHES ON ORIGINAL

RECYCLED WATER DISTRIBUTION SYSTEM – RAMPART BLVD PIPELINE

MLC STEEL PIPE CATHODIC PROTECTION DETAILS

SCALE AS SHOWN

894D06.DWG Plot ● 06/14/98 11:24

DRAWN BY: R. ATLEE 1/19/98
CHECKED BY: M. PETERSON 6/10/98
RECOMMENDED BY: RAM G. JANGA R.P.E. NO. 12702 6/24/98 DATE
ACCEPTED BY: ANDREW W. RICHARDSON R.P.E. NO. 8573 6/24/98 DATE

REGISTERED PROFESSIONAL ENGINEER ANDREW W. RICHARDSON CIVIL No. 8573 STATE OF NEVADA

CONTRACT NUMBER
894

DRAWING NUMBER D7
SHEET 48 OF 51

REVISIONS:

1/6 21

565-308

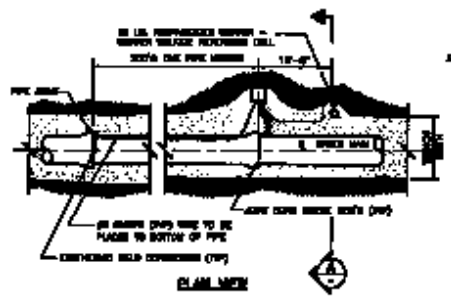

PLAN VIEW

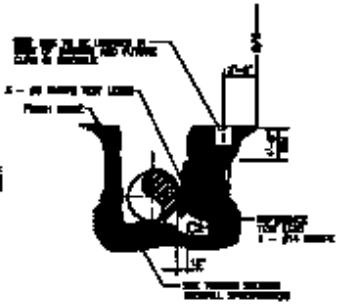

SECTION A