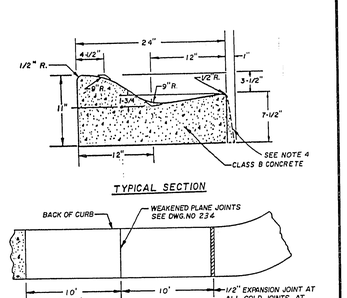

NOTES:
1. USE OF THIS TYPE OF CURB MAY BE LIMITED BY SURFACE DRAINAGE CONSIDERATIONS.
2. ROLL TYPE CURB AND GUTTER MAY NOT BE USED ADJACENT TO SIDEWALKS.
3. WHEN ROLL TYPE CURB AND GUTTER IS USED, ACCESS TO THE PROPERTY TO BE AS SHOWN ON DRAWING NO. 222.
4. 1" BATTER ON GUTTER FACE OPTIONAL.
5. WHERE LONGITUDINAL SLOPE IS LESS THAN 0.4%, THE FLOW LINE SHALL BE WATER TESTED.

SPECIFICATION REFERENCE	UNIFORM STANDARD DRAWINGS CLARK COUNTY AREA
501 CONCRETE	ROLL TYPE CURB AND GUTTER RESIDENTIAL AREA
502 CONCRETE STRUCTURES	
707 JOINT MATERIAL	
DATE	DWG NO 217 PAGE NO 23

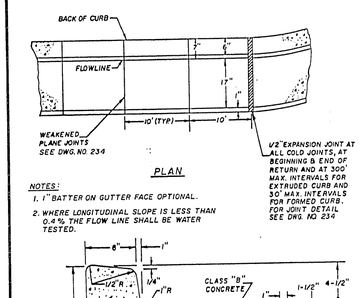

NOTES:
1. 1" BATTER ON GUTTER FACE OPTIONAL.
2. WHERE LONGITUDINAL SLOPE IS LESS THAN 0.4 % THE FLOW LINE SHALL BE WATER TESTED.

SPECIFICATION REFERENCE	UNIFORM STANDARD DRAWINGS CLARK COUNTY AREA
501 CONCRETE	"L" TYPE CURB AND GUTTER
502 CONCRETE STRUCTURES	
707 JOINT MATERIAL	
DATE	DWG NO 216 PAGE NO 22

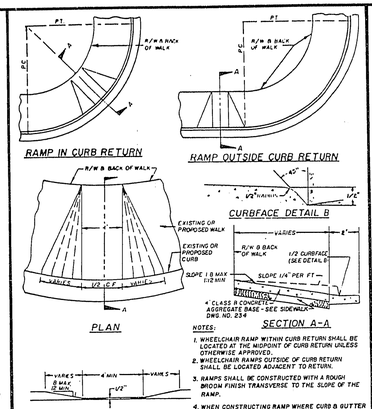

NOTES:
1. WHEELCHAIR RAMP WITHIN CURB RETURN SHALL BE LOCATED AT THE MIDPOINT OF CURB RETURN UNLESS OTHERWISE APPROVED.
2. WHEELCHAIR RAMPS OUTSIDE OF CURB RETURN SHALL BE LOCATED ADJACENT TO RETURN.
3. RAMPS SHALL BE CONSTRUCTED WITH A ROUGH BROOM FINISH TRANSVERSE TO THE SLOPE OF THE RAMP.
4. WHEN CONSTRUCTING RAMPS WHERE CURB & GUTTER EXISTS, COMPLETELY REMOVE INTERFERING PORTIONS OF EXISTING CURB & GUTTER. RAMP, CURB & GUTTER TO BE MONOLITHIC.

SPECIFICATION REFERENCE	UNIFORM STANDARD DRAWINGS CLARK COUNTY AREA
302 AGGREGATE BASE	WHEELCHAIR RAMP
501 CONCRETE	
502 CONCRETE STRUCTURES	
DATE	DWG NO 235 PAGE NO 41

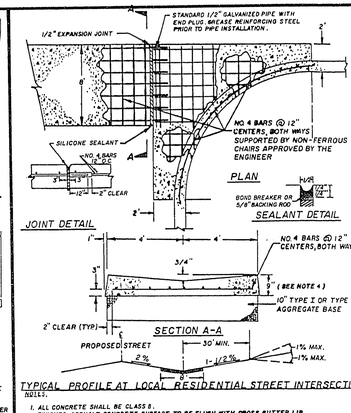

NOTES:
1. ALL CONCRETE SHALL BE CLASS B.
2. FINISHED ASPHALT CONCRETE SURFACE TO BE FLUSH WITH CROSS GUTTER LIP.
3. CONSTRUCTION OF CROSS GUTTER IS NOT ALLOWED ACROSS MAJOR COLLECTOR OR ARTERIAL STREETS.
4. AGGREGATE BAND REBAR SHALL BE 8" THICK P.C.C.

SPECIFICATION REFERENCE	UNIFORM STANDARD DRAWINGS CLARK COUNTY AREA
302 AGGREGATE BASE	CROSS GUTTER
501 CONCRETE	
502 CONCRETE STRUCTURES	
505 REINFORCING STEEL	
707 EXPANSION JOINT MATERIAL	
TT-S-00153A CLASS A SEALANT	DATE DWG NO 228 PAGE NO 34

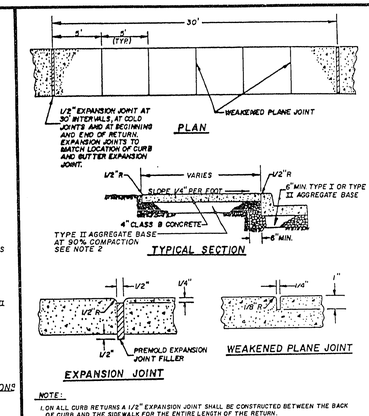

NOTE:
1. ON ALL CURB RETURNS A 1/2" EXPANSION JOINT SHALL BE CONSTRUCTED BETWEEN THE BACK OF CURB AND THE SIDEWALK FOR THE ENTIRE LENGTH OF THE RETURN.
2. THE TYPE II AGGREGATE BASE THICKNESS IS SHOWN ON THE TYPICAL SECTION DRAWINGS 202 - 207.
3. LONGITUDINAL WEAKENED PLANE JOINT REQUIRED AT MIDPOINT OF SIDEWALK 10' OR WIDER.

SPECIFICATION REFERENCE	UNIFORM STANDARD DRAWINGS CLARK COUNTY AREA
302 AGGREGATE BASE	SIDEWALK
501 CONCRETE	
502 CONCRETE STRUCTURES	
707 JOINT MATERIAL	
DATE	DWG NO 234 PAGE NO 40

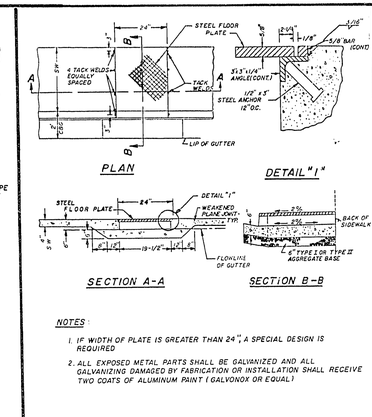

NOTES:
1. IF WIDTH OF PLATE IS GREATER THAN 24", A SPECIAL DESIGN IS REQUIRED
2. ALL EXPOSED METAL PARTS SHALL BE GALVANIZED AND ALL GALVANIZING DAMAGED BY FABRICATION OR INSTALLATION SHALL RECEIVE TWO COATS OF ALUMINUM PAINT (GALVONOX OR EQUAL)

SPECIFICATION REFERENCE	UNIFORM STANDARD DRAWINGS CLARK COUNTY AREA
302 BASE AGGREGATES	SIDEWALK DRAIN
501 CONCRETE	
502 CONCRETE STRUCTURES	
710 STRUCTURAL STEEL	
DATE	DWG NO 236 PAGE NO 42

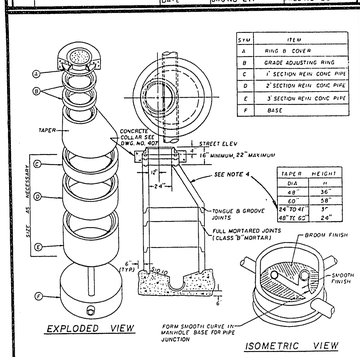

SYM	ITEM
A	RING & COVER
B	GRADE ADJUSTING RING
C	1' SECTION REIN CONC PIPE
D	2' SECTION REIN CONC PIPE
E	3' SECTION REIN CONC PIPE
F	BASE

TAPER	HEIGHT
DIA H	
48" 36"	
60" 58"	
84" 70.4" 37"	
48" 76.6" 24"	

NOTES:
1. IN UNIMPROVED NON-TRAFFIC AREAS, TOP OF MANHOLE SHALL BE 6" TO 9" ABOVE GRADE.
2. PIPES SHALL NOT PROTRUDE MORE THAN 3" INSIDE OF MANHOLE SECTION. CONSTRUCT WATER TIGHT CONNECTION TO MANHOLE.
3. PIPE SECTION LENGTHS ARRANGED TO FIT DEPTH.
4. AN OPTIONAL TWO FEET 24" TO 48" AND 48" TO 60" CONE MAY BE USED.

SPECIFICATION REFERENCE	UNIFORM STANDARD DRAWINGS CLARK COUNTY AREA
501 CONCRETE & MORTAR	TYPE I MANHOLE
609 CATCH BASINS, MANHOLES & INLETS	
DATE	DWG NO. 403 PAGE NO. 103

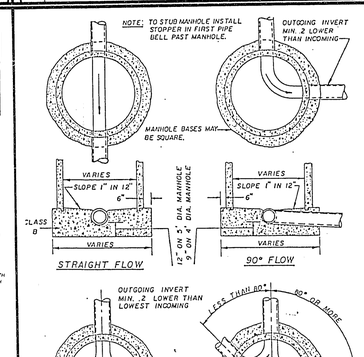

REVISIONS	DESCRIPTION	DATE
APPROVED:		
COUNTY ENGINEER	R.P.E # 5133	DATE 10/21/83 DWG NO. 316 SHT NO. 1 of 1

CLARK COUNTY PUBLIC WORKS STANDARD DRAWINGS

STANDARD MANHOLE BASES

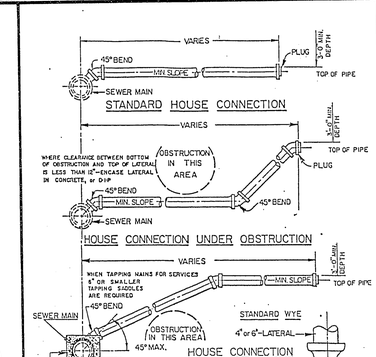

NOTE:
1. STANDARD VERIFIED CLAY TAPPING SADDLE W/CONCRETE AS SHOWN FOR CONNECTION TO EXISTING SEWERS ONLY.
2. ALL CONCRETE TO BE 2500 # IN ACCORDANCE WITH SEC. 4.8.2 OF THE DESIGN STDS.

LATERAL CONNECTION	CLARK COUNTY SANITATION DISTRICT DESIGN STANDARDS
ISSUED: REV.	DRAWING NUMBER- SD-17

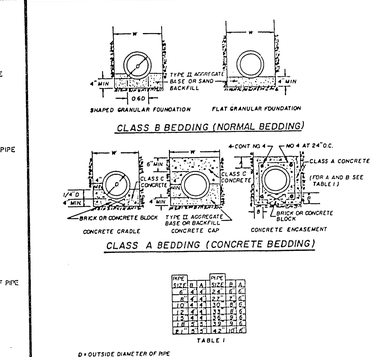

PIPE SIZE	A	B	PIPE SIZE	A	B
4"	2	4	24"	3	6
6"	2	4	27"	3	6
8"	2	4	30"	3	6
10"	2	4	33"	3	6
12"	2	4	36"	3	6
15"	2	4	42"	3	6
18"	2	4	48"	3	6
21"	2	4	54"	3	6

TABLE I

D = OUTSIDE DIAMETER OF PIPE
W = OUTSIDE DIAMETER OF PIPE + 24" MAXIMUM

NOTES:
1. PIPE BEDDING TO BE COMPACTED TO AT LEAST 90% OF MAXIMUM DENSITY.
2. INDICATED THICKNESS OF BEDDING MATERIAL TO BE CONSTRUCTED UNDER THE BARREL. SUBGRADE TO BE EXCAVATED TO PROVIDE 2" CLEARANCE UNDER THE BELL.
3. OTHER BEDDING METHODS MAY BE SPECIFIED OR APPROVED.

SPECIFICATION REFERENCE	UNIFORM STANDARD DRAWINGS CLARK COUNTY AREA
208 TRENCH EXCAVATION & BACKFILL	PIPE TRENCH BEDDING METHODS
302 AGGREGATE BASE COURSES	
501 CONCRETE	
505 REINFORCEMENT STEEL	
DATE	DWG NO. 505 PAGE NO. 125

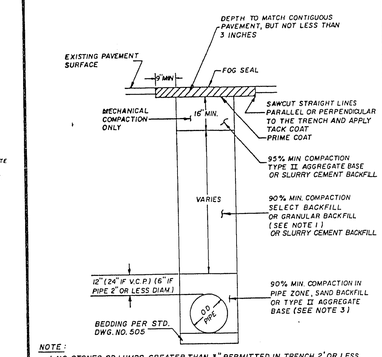

NOTE:
1. NO STONES OR LUMPS GREATER THAN 3" PERMITTED IN TRENCH 2' OR LESS IN WIDTH.
2. IF SAWCUT IS WITHIN THREE FEET OF EDGE OF EXISTING ASPHALT CONCRETE SURFACE OR OTHER PATCH REMOVE EXISTING PAVEMENT TO THAT EDGE AND REPLACE ENTIRE SECTION.
3. TRENCH WIDTH, BEDDING, AND PIPE ZONE REQUIREMENTS FOR UTILITY INSTALLATIONS SHALL CONFORM TO THE RESPECTIVE AGENCY REQUIREMENTS.

SPECIFICATION REFERENCE	UNIFORM STANDARD DRAWINGS CLARK COUNTY AREA
207 BACKFILL	GRANULAR TRENCH BACKFILL PAVED AREAS (STREETS WITH 60' OR LESS R/W)
208 TRENCH EXCAVATION & BACKFILL	
302 AGGREGATE BASE COURSES	
401 BITUMINOUS PAVEMENT	
406 PRIME COAT	
407 FOG SEAL	
DATE	DWG NO. 503 PAGE NO. 123

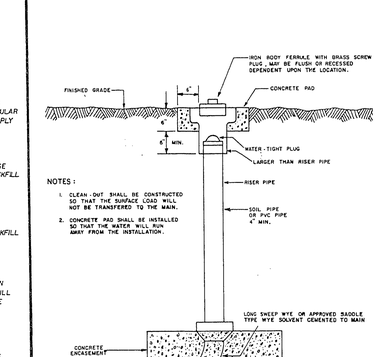

NOTES:
1. CLEAN-OUT SHALL BE CONSTRUCTED SO THAT THE SURFACE LOAD WILL NOT BE TRANSFERED TO THE MAIN.
2. CONCRETE PAD SHALL BE INSTALLED SO THAT THE WATER WILL RUN AWAY FROM THE INSTALLATION.

SANITARY SEWER CLEANOUT

NOTES:
1. NO HYDRANT SHALL BE LOCATED WITHIN 15' OF ANY DRIVEWAY, 6' OF POWER POLE, LIGHT STANDARD, OR ANY OTHER OBSTRUCTION.
2. IF HYDRANT IS TO BE INSTALLED IN AN EXISTING SIDEWALK, A FULL PANEL OF THE SIDEWALK SHALL BE REMOVED AND REPLACED AFTER INSTALLATION OF THE HYDRANT.
3. WHEN R/W AND FIELD CONDITIONS PERMIT THE FIRE HYDRANT SHALL BE PLACED BEHIND THE SIDE WALK.

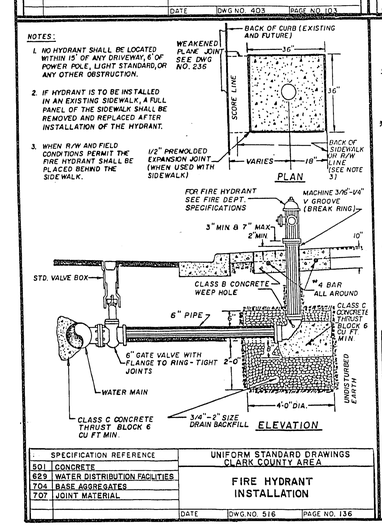

SPECIFICATION REFERENCE	UNIFORM STANDARD DRAWINGS CLARK COUNTY AREA
501 CONCRETE	FIRE HYDRANT INSTALLATION
629 WATER DISTRIBUTION FACILITIES	
704 BASE AGGREGATES	
707 JOINT MATERIAL	
DATE	DWG.NO. 516 PAGE NO. 136

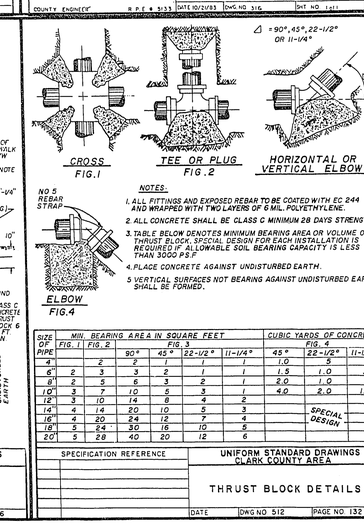

SIZE OF PIPE	MIN. BEARING AREA IN SQUARE FEET FIG. 1	FIG. 2	FIG. 3 90°	45°	22-1/2°	11-1/4°	FIG. 4 45°	22-1/2°	11-1/4°	CUBIC YARDS OF CONCRETE
4"	2	2	2	1	1	1	1.0	.5	.5	
6"	2	3	3	2	1	1	1.5	1.0	.5	
8"	2	5	6	3	2	1	2.0	1.0	.5	
10"	3	7	10	5	3	1	4.0	2.0	1.0	
12"	3	10	14	8	4	2				
14"	4	14	20	10	5	3		SPECIAL DESIGN		
16"	4	20	24	12	7	4				
18"	5	24	30	16	10	5				
20"	5	28	40	20	12	6				

SPECIFICATION REFERENCE	UNIFORM STANDARD DRAWINGS CLARK COUNTY AREA
	THRUST BLOCK DETAILS
DATE	DWG NO 512 PAGE NO 132

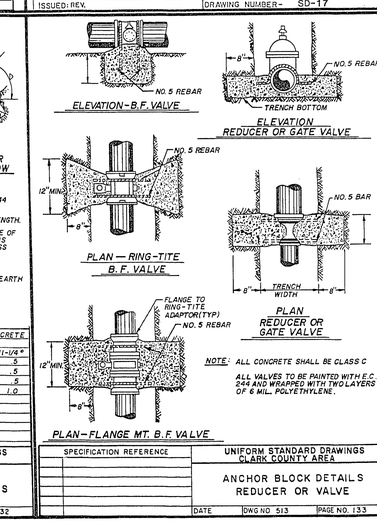

NOTE: ALL CONCRETE SHALL BE CLASS C
ALL VALVES TO BE PAINTED WITH E.C. 244 AND WRAPPED WITH TWO LAYERS OF 6 MIL. POLYETHYLENE.

SPECIFICATION REFERENCE	UNIFORM STANDARD DRAWINGS CLARK COUNTY AREA
	ANCHOR BLOCK DETAILS REDUCER OR VALVE
DATE	DWG NO 513 PAGE NO. 133

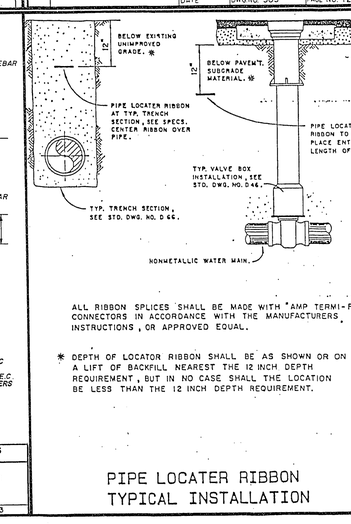

ALL RIBBON SPLICES SHALL BE MADE WITH "AMP TERMI-FOIL" CONNECTORS IN ACCORDANCE WITH THE MANUFACTURERS INSTRUCTIONS, OR APPROVED EQUAL.

* DEPTH OF LOCATOR RIBBON SHALL BE AS SHOWN OR ON A LIFT OF BACKFILL NEAREST THE 12 INCH DEPTH REQUIREMENT, BUT IN NO CASE SHALL THE LOCATION BE LESS THAN THE 12 INCH DEPTH REQUIREMENT.

PIPE LOCATER RIBBON
TYPICAL INSTALLATION

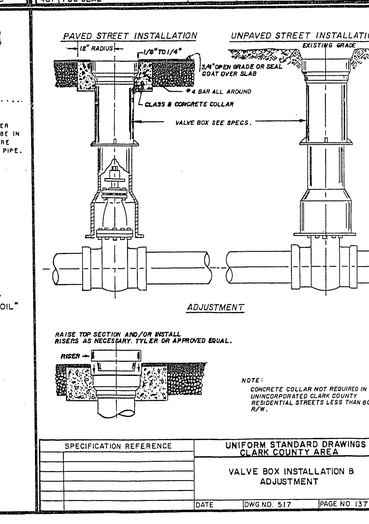

SPECIFICATION REFERENCE	UNIFORM STANDARD DRAWINGS CLARK COUNTY AREA
	VALVE BOX INSTALLATION & ADJUSTMENT
DATE	DWG NO. 517 PAGE NO. 137

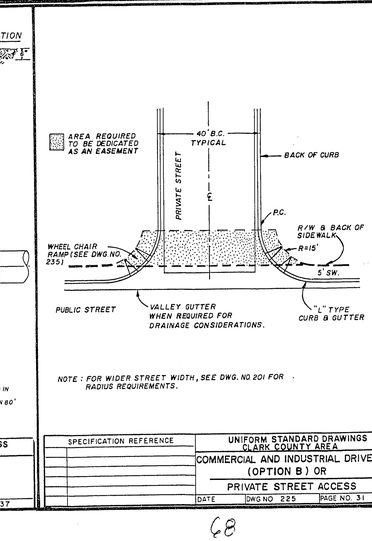

NOTE: FOR WIDER STREET WIDTH, SEE DWG. NO 201 FOR RADIUS REQUIREMENTS.

SPECIFICATION REFERENCE	UNIFORM STANDARD DRAWINGS CLARK COUNTY AREA
	COMMERCIAL AND INDUSTRIAL DRIVEWAY (OPTION B) OR PRIVATE STREET ACCESS
DATE	DWG NO 225 PAGE NO. 31

ROBINSON/KELLER ENGINEERING, INC.
CIVIL ENGINEERS - SURVEYORS - PLANNERS
THE NANHO OFFICE CENTER
3938 RAYMENT DRIVE, SUITE 3
LAS VEGAS, NEVADA 89121
TELEPHONE 702-456-2730

FOR BURIED UTILITY INSPECTION 48 HOURS BEFORE YOU DIG (800)227-2600
FOR LOCATING & MARKING GAS, ELECTRIC, TELEPHONE LINES, CATV & ETC.

THIS DRAWING IS THE PROPERTY OF ROBINSON/KELLER ENGINEERING INC. THE IDEAS AND DESIGNS INCORPORATED HEREON AS AN INSTRUMENT OF PROFESSIONAL SERVICE IS NOT TO BE USED FOR ANY OTHER PROJECT WITHOUT WRITTEN AUTHORIZATION OF ROBINSON/KELLER ENGINEERING INC.

SCALE VERIFICATION
BAR IS ONE INCH ON ORIGINAL DRAWING
IF NOT ONE INCH ADJUST SCALES ACCORDINGLY

REVISIONS	No.	DESCRIPTION	DATE	BY
	1			
	2			
	3			
	4			
	5			
	6			

PROJECT: JONATHAN'S GLEN II
TITLE: TYPICAL DETAILS & SECTIONS

DRAWN BY: JLW
DESIGNED BY: JAE
CHECKED BY: RD
APPROVED BY: WHK
JOB NUMBER: LV.1865.00
DATE: SEPT. 6, 1989
SCALE:
SHEET No.: 9 of 9

68

1074-4040-II