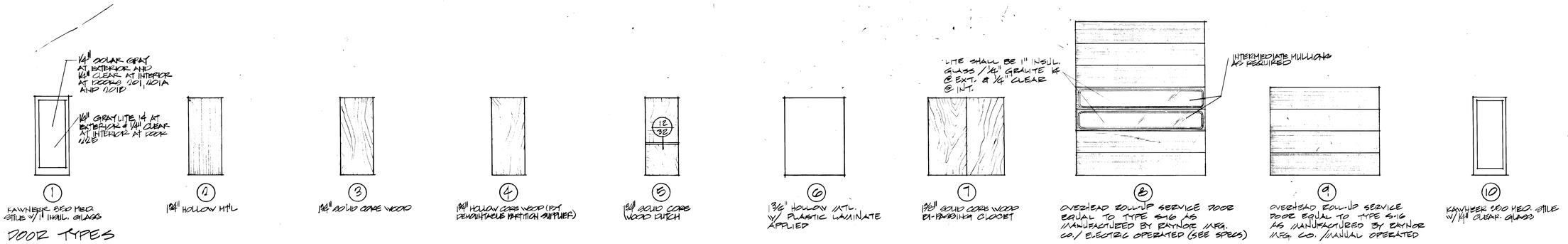

DOOR TYPES

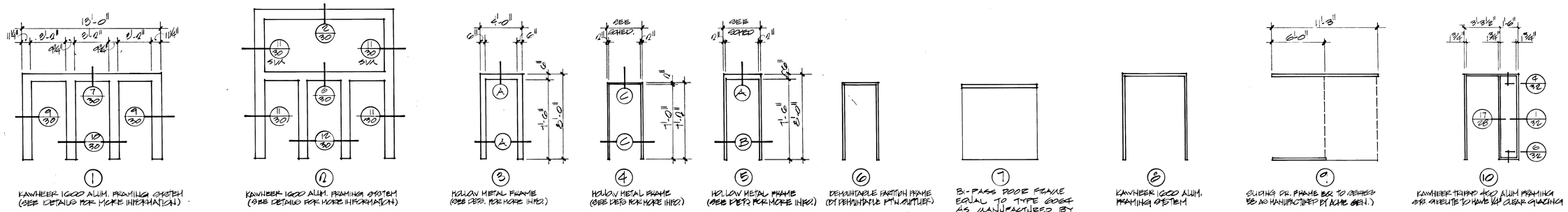

DOOR FRAME TYPES

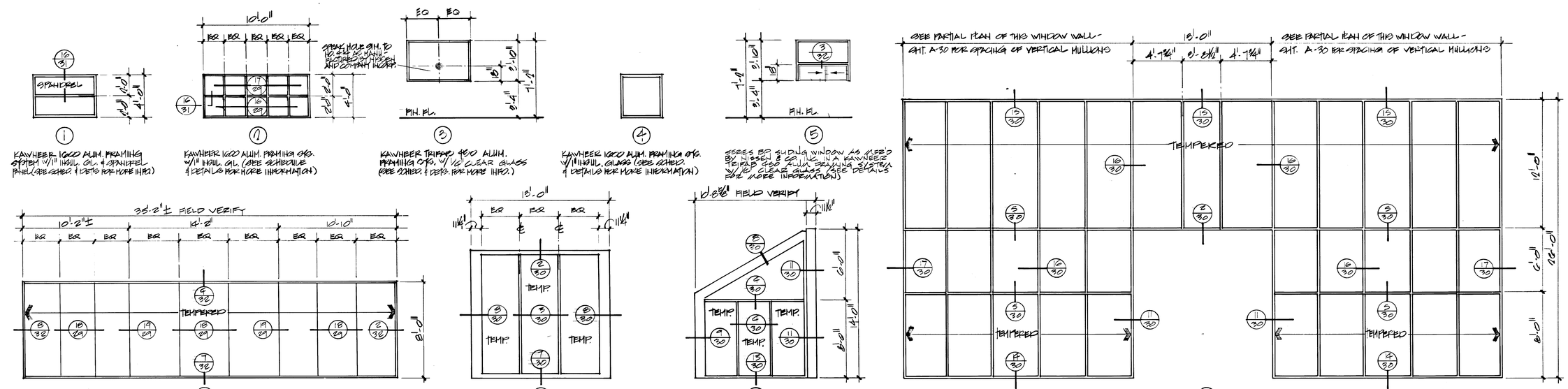

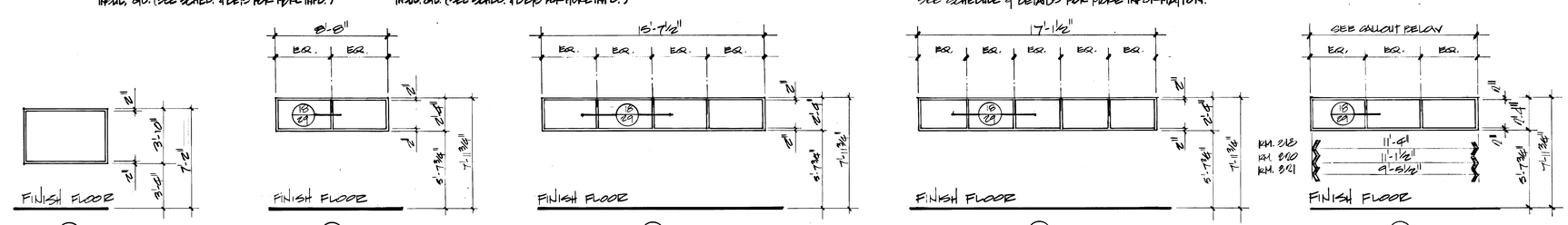

WINDOW TYPES

4463

Dwg. # 630-74

HARRIS SHARP & ASSOCIATES, INCORPORATED
2915 W. CHARLESTON BLVD. LAS VEGAS, NEVADA 89102 (702) 877-0125
ARCHITECTURE PLANNING AND INTERIORS
HARRIS P. SHARP A.I.A.
GERALD R. STOFFLOW A.I.A.
DAVID A. DALETA A.I.A.
ROLF A.I.A.
PATRICK KLENK A.I.A.
THOMAS SILVA A.I.A.
ERNEST BARRON

Sheet Title: DOOR & WINDOW TYPES & DETAILS

Job Title: CENTRAL FIRE STATION

VERIFY ALL DIMENSIONS AND CONDITIONS AT THE SITE

Job: 482-1

Date: 8 NOV. 82

Drawn By: T.W.

Checked: N.C.

Sheet No. A-26

Of 34

48 of 119