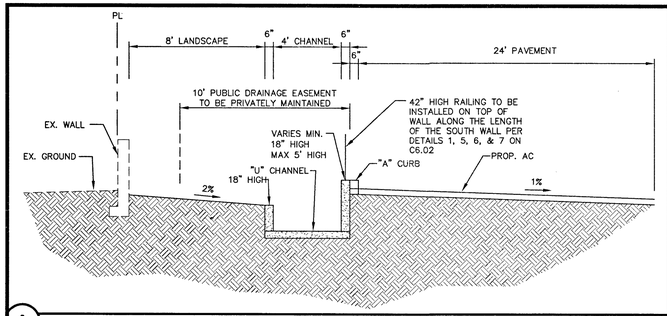

A NORTH PROPERTY SECTION NOT TO SCALE

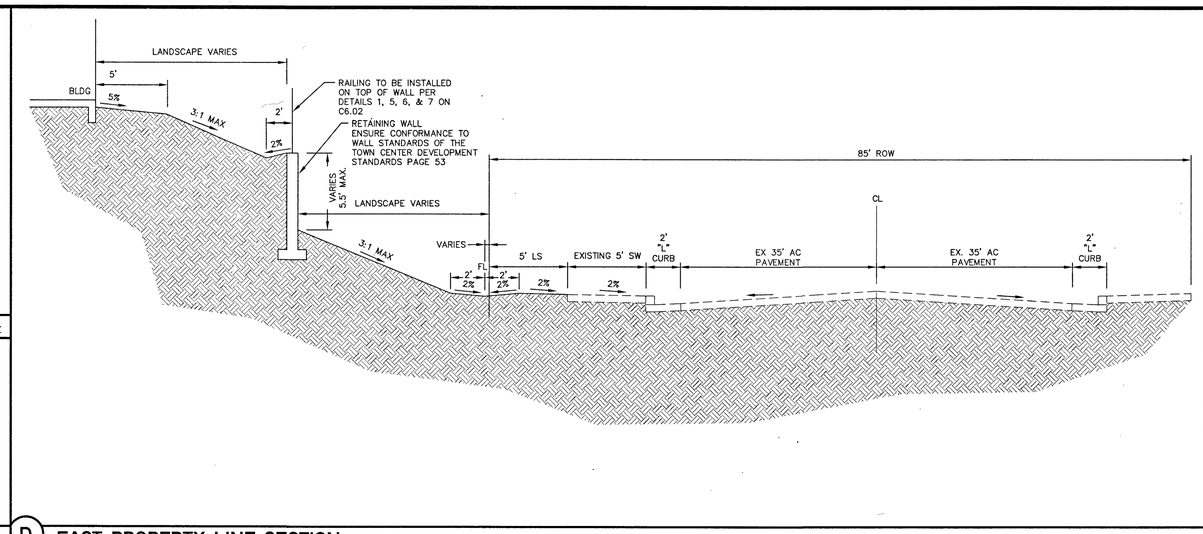

D EAST PROPERTY LINE SECTION NOT TO SCALE

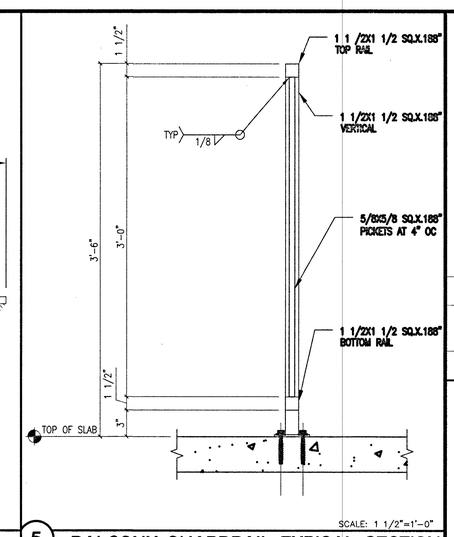

5 BALCONY GUARDRAIL TYPICAL SECTION

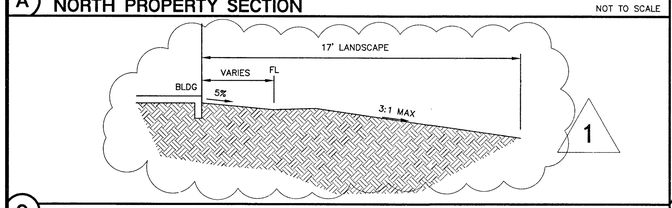

C SOUTH PROPERTY SECTION NOT TO SCALE

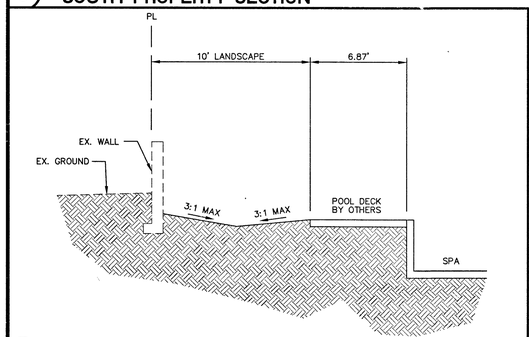

B NORTH PROPERTY LINE SECTION NOT TO SCALE

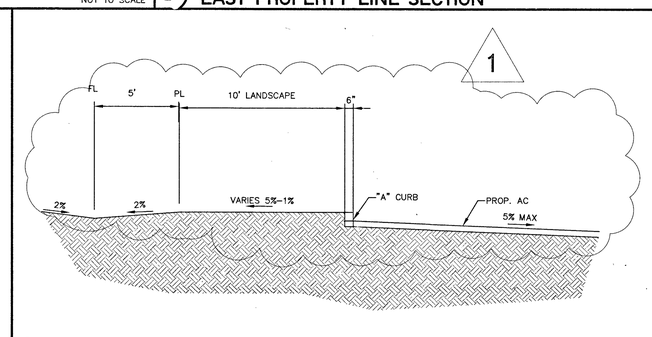

F WEST PROPERTY SECTION NOT TO SCALE

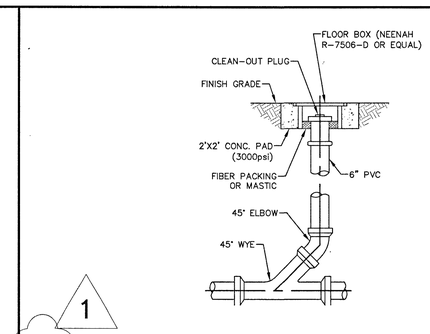

2 SANITARY SEWER CLEAN-OUT NOT TO SCALE

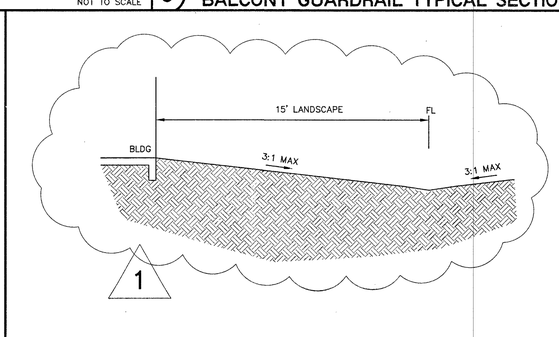

E SECTION NOT TO SCALE

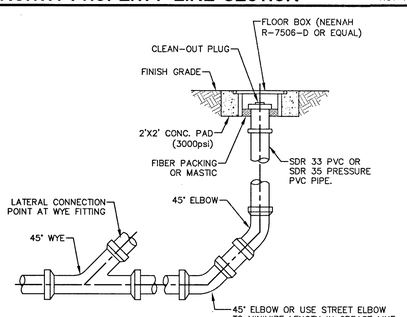

3 SEWER CLEAN-OUT - TERMINAL NOT TO SCALE

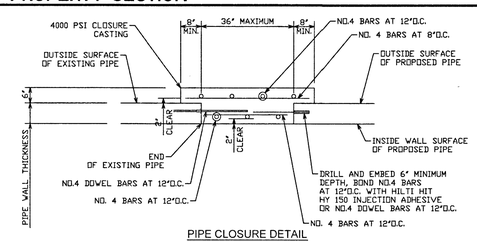

PIPE CLOSURE DETAIL

ALL CONCRETE TO HAVE 28 DAY COMPRESSIVE STRENGTH OF 4000 psi

REINFORCING STEEL SHALL COMPLY WITH ASTM A615 GRADE 60 OR ASTM A706 GRADE 60. BAR BENDING AND PLACEMENT SHALL COMPLY WITH THE LATEST ACI STANDARDS.

EQUIVALENT AREA Fy= 65000 psi ASTM A 185 OR A 497 REINFORCING CAGES MAY BE UTILIZED IN LIEU OF GRADE 60 REINFORCING BARS.

STRUCTURAL DESIGN IS BASED ON AASHTO HS 20 LOADING APPLIED IN ACCORDANCE WITH THE REQUIREMENTS OF ASTM C 1433-03 AND AASHTO.

SOIL UNIT WEIGHT - 120 lbs/cu.ft.
SOIL STRUCTURE INTERACTION FACTOR - 1.15
EQUIVALENT LATERAL PRESSURE - 60 lbs/cu.ft.

THE DESIGN IS BASED ON THE TOP AT ANY ELEVATION BETWEEN 1.0' AND 10.0' BELOW GRADE WITH A MAXIMUM CULVERT INSIDE HEIGHT OF 6.0 FEET.

4 RCP SD CONNECTION NOT TO SCALE

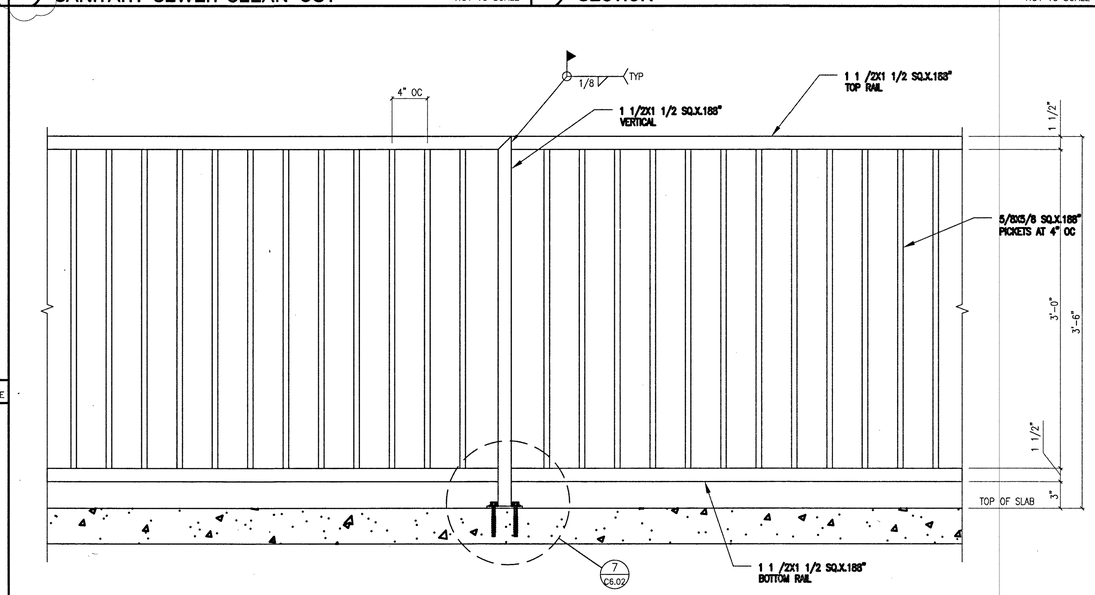

1 TYPICAL FENCING ELEVATION SCALE: 1 1/2"=1'-0"

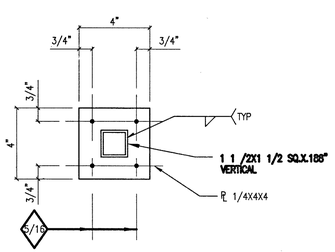

6 BASE PLATE DETAIL SCALE: 3"=1'-0"

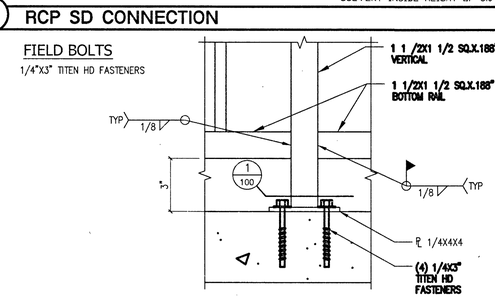

7 BOTTOM ATTACHMENT DETAIL SCALE: 3"=1'-0"

REV.:	DATE:	BY:	DESCRIPTION:
1	9-25-15	MKG	SITE CHANGES

dm 12/21/15

SHIRON DEVELOPMENT LLC
4321 CHEYENE
LAS VEGAS, NV 89032
CONTACT: JAMES LIMERICK 702-251-0789

Lochsa engineering
8345 South Jones Blvd
Suite 100
Las Vegas, NV 89118
Phone (702) 363-3312
Fax (702) 363-3317
www.lochsa.com

DETAIL SHEETS SHEET 2

PAXTON WALK
CITY OF LAS VEGAS
LAS VEGAS, NEVADA

SHEET
TITLE

PROJECT No.: 131054
DATE: 11/19/2015
SCALE: NONE
DRAWN BY: JNC
DESIGNED BY: JNC
CHECKED BY: GMM

SEAL: GUY M. MORRIS EXP. 12-31-17 CIVIL No. 14526 STATE OF NEVADA
11/19/2015

SHEET No.
C6.02
SHEET 21 OF 22

107V64925
H#575726

12/8/2015 2:28 PM
P:\CAD\131054\Drawings\Plot Drawings\C-131054-600-07.dwg