PAVILION POOL COVER

101 SOUTH PAVILION CENTER DRIVE
LAS VEGAS, NEVADA 89144
APN #137-35-501-004

NOTE
Federal Law Requires you meet all requirements of the Americans with Disabilities Act. You must comply with Chap. 11 of the IBC, ANSI 117.1, local ordinances, or federal (ADA) guidelines, whichever is most restrictive. (These plans have not been reviewed for the ADA guidelines.)

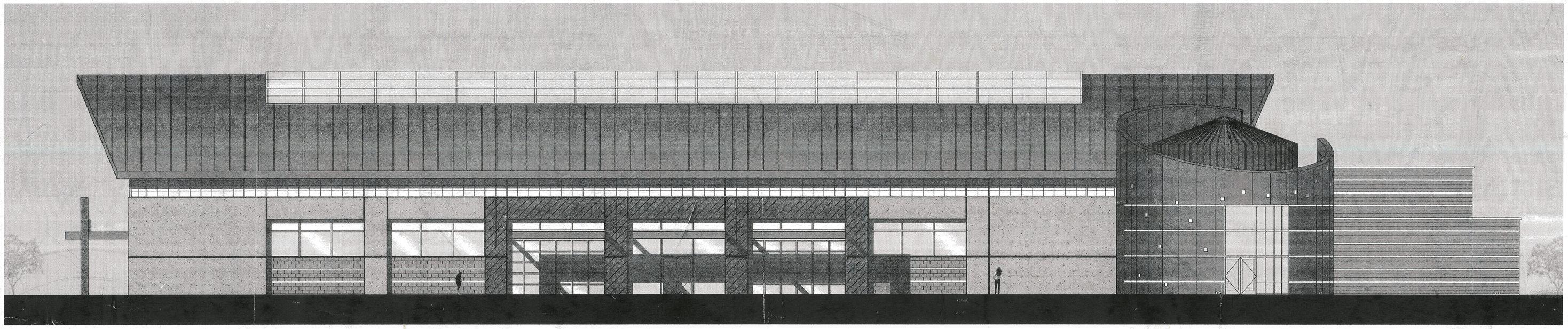

Index Of Drawings

SHT.#	DESCRIPTION	⚠	DATE	DESCRIPTION
PROJECT MANUAL				
–	UNDER SEPARATE COVER	–	–	–
GENERAL INFORMATION				
G0.00	COVER SHEET	–	–	–
G1.10	GENERAL NOTES, LEGENDS AND SHEET INDEX	–	–	–
G2.10	OVERALL SITE PLAN	–	–	–
G2.11	CODE ANALYSIS AND IECC CERTIFICATE	–	–	–
G2.12	EXITING PLAN	–	–	–
G3.10	FIRE RATED ASSEMBLIES	–	–	–
CIVIL				
C1.01	COVER SHEET	–	–	–
C1.02	GENERAL NOTES	–	–	–
C2.01	DEMOLITION PLAN	–	–	–
C3.01	GRADING PLAN	–	–	–
ARCHITECTURAL				
A0.10	DEMOLITION SITE PLAN	–	–	–
A0.20	DEMOLITION BUILDING PLANS	–	–	–
A1.10	SITE PLAN	–	–	–
A2.10	FLOOR PLAN	–	–	–
A2.11	EXISTING FLOOR PLAN	–	–	–
A2.20	CLERESTORY AND TRELLIS PLAN	–	–	–
A3.10	REFLECTED CEILING PLAN	–	–	–
A3.11	EXISTING REFLECTED CEILING PLAN	–	–	–
A4.10	ROOF PLAN	–	–	–
A4.20	ROOF DETAILS	–	–	–
A4.21	TRELLIS PLAN AND DETAILS	–	–	–
A5.10	EXTERIOR ELEVATIONS	–	–	–
A5.11	EXTERIOR ELEVATIONS	–	–	–
A6.10	BUILDING SECTIONS/INTERIOR ELEVATIONS	–	–	–
A6.11	BUILDING SECTIONS/INTERIOR ELEVATIONS	–	–	–
A7.10	WALL SECTIONS	–	–	–
A7.11	WALL SECTIONS	–	–	–
A7.12	WALL SECTIONS	–	–	–
A8.10	DOOR TYPES, SCHEDULE AND DETAILS	–	–	–
A8.20	WINDOW FRAME TYPES	–	–	–
A8.21	WINDOW FRAME TYPES	–	–	–
A8.30	DETAILS	–	–	–
A8.31	DETAILS	–	–	–

SHT.#	DESCRIPTION	⚠	DATE	DESCRIPTION
STRUCTURAL - FOUNDATION				
S1.01	GSN AND INFORMATION	–	–	–
S1.02	TYPICAL DETAILS	–	–	–
S1.03	SCHEDULES	–	–	–
S2.01	FOUNDATION PLAN	–	–	–
S3.01	FRAMING PLAN	–	–	–
S4.01	FOUNDATION DETAILS	–	–	–
S5.01	FRAMING DETAILS	–	–	–
STRUCTURAL - BUILDING				
1	COVER SHEET	–	–	–
2	ERECTION NOTES	–	–	–
3	ANCHOR ROD PLAN	–	–	–
4	ANCHOR ROD PLAN – DETAILS	–	–	–
5	PRIMARY AND ROD BRACING PLAN	–	–	–
6	FRAME CROSS SECTION AT FRAME LINE(S) 10	–	–	–
7	PORTAL FRAME ELEVATION ALONG A	–	–	–
8	PORTAL FRAME ELEVATION ALONG A	–	–	–
9	FRAME CROSS SECTION AT FRAME LINE(S) 14	–	–	–
10	FRAME CROSS SECTION AT FRAME LINE(S) 15	–	–	–
11	FRAME CROSS SECTION AT FRAME LINE(S) 2	–	–	–
12	FRAME CROSS SECTION AT FRAME LINE(S) 3	–	–	–
13	FRAME CROSS SECTION AT FRAME LINE(S) 4	–	–	–
14	FRAME CROSS SECTION AT FRAME LINE(S) 5	–	–	–
15	FRAME CROSS SECTION AT FRAME LINE(S) 6	–	–	–
16	FRAME CROSS SECTION AT FRAME LINE(S) 7	–	–	–
17	FRAME CROSS SECTION AT FRAME LINE(S) 8	–	–	–
18	FRAME CROSS SECTION AT FRAME LINE(S) 9	–	–	–
19	FRAME CROSS SECTION AT FRAME LINE(S) 12	–	–	–
20	PORTAL FRAME ELEVATION ALONG D	–	–	–
21	PORTAL FRAME ELEVATION ALONG D	–	–	–
22	ROOF SECONDARY PLAN	–	–	–
22A	ROOF SECONDARY PLAN – DETAILS	–	–	–
23	ROOF COVERING PLAN	–	–	–
24	ROOF LINER PLAN	–	–	–
25	CUSTOM SED'S	–	–	–
26	MRD19 DRAWING	–	–	–
27	COMMON WAREHOUSE PARTMARKS	–	–	–
28	MRD50 DRAWING	–	–	–
29	BUILDING SED'S	–	–	–

SHT.#	DESCRIPTION	⚠	DATE	DESCRIPTION
MECHANICAL / PLUMBING				
MP0.00	GENERAL NOTES, SYMBOL LOST AND DRAWING INDEX	–	–	–
MP0.01	MECHANICAL AND PLUMBING SCHEDULES	–	–	–
MP0.05	MECHANICAL AND PLUMBING DETAILS	–	–	–
MP0.06	MECHANICAL AND PLUMBING DETAILS	–	–	–
MP0.10	PIPING SCHEMATICS AND CONTROL DIAGRAMS	–	–	–
MP0.15	IECC CERTIFICATE	–	–	–
MP2.11	PARTIAL MECHANICAL AND PLUMBING DEMOLITION PLAN	–	–	–
MP2.10	PARTIAL MECHANICAL AND PLUMBING PLAN	–	–	–
MP2.11	PARTIAL MECHANICAL AND PLUMBING PLAN	–	–	–
MP4.10	PARTIAL ROOF MECHANICAL AND PLUMBING PLAN	–	–	–
ELECTRICAL				
E0.00	ELECTRICAL SYMBOLS, SPECIFICATIONS AND DRAWING INDEX	–	–	–
E0.01	FIXTURE SCHEDLE AND IECC SPECIFICATIONS	–	–	–
E0.02	SINGLE LINE DIAGRAM AND PANEL SCHEDULES	–	–	–
E0.03	A/V DIAGRAMS	–	–	–
E1.10	ELECTRICAL SITE PLAN	–	–	–
E2.10	PARTIAL POWER PLAN	–	–	–
E2.11	PARTIAL POWER PLAN	–	–	–
E2.20	SECURITY, COMMUNICATIONS, AND AUDIO PLAN	–	–	–
E3.10	PARTIAL LIGHTING PLAN	–	–	–
E3.11	PARTIAL LIGHTING PLAN	–	–	–
E4.10	PARTIAL ROOF PLAN	–	–	–

Project Team

Geotechnical Engineer
Kleinfelder
6380 Polaris Avenue
Las Vegas, Nevada 89118
(702) 736-2936
(702) 320-0040

Civil Engineer
Lochsa Engineering
6345 South Jones Blvd #200
Las Vegas, Nevada 89118
(702) 365-9312
(702) 365-9312

Structural Engineer
Mendenhall Smith
3571 Red Rock Street, Suite A
Las Vegas, Nevada 89103
(702) 367-6725
(702) 367-2727

Varco Pruden Buildings
3200 Players Club Circle
Memphis, TN 38125
(901) 748-8000
(901) 748-9323

M, P & E Engineer
MSA Engineering Consultants
370 East Windmill Lane Suite 100
Las Vegas, Nevada 89123
(702) 896-1100
(702) 896-1133

Fire Protection Engineer
JBA Consulting Engineers
5155 West Patrick Lane, Suite 100
Las Vegas, Nevada 89118
(702) 362-9200
(702) 362-9862

Pool Consultant
Councilman Hunsaker
10733 Sunset Office Drive, 4th Floor
St. Louis, Missouri 63127
(314) 894-1245
(314) 894-0109

Vicinity Map

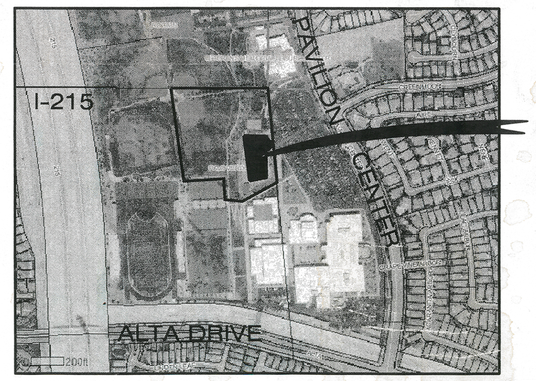

RECEIVED
MAR 26 2009
CITY OF LAS VEGAS
PERMITS

APPROVED BY: DATE:

Patrick Batte, Project Manager

REVIEWED
4/28/09
BY
LAS VEGAS FIRE DEPARTMENT

PLANS APPROVED
APR 2 2009

PERMIT SET

JOB 136465-09

FIRST PLANS WERE CHECKED UNDER THE 2006 IBC/IFC, 2006 UPC AND THE 2005 NEC

IN BUILDINGS PROVIDED WITH FIRE ALARM SYSTEMS, RADIO DETECTORS INSTALLED IN ALL ELEVATORS SHALL BE CONNECTED TO THE FIRE ALARM CONTROL PANEL. IN BUILDINGS WITHOUT FIRE ALARM SYSTEMS AIR HANDLER SHUT DOWN ON ACTIVATION SMOKE DETECTOR. (EXCLUDING UNITS OF 4 OR LESS OCCUPANTS) VISUAL AND AUDIBLE SIGNAL IN A NORMALLY OCCUPIED LOCATION SHALL BE ACTIVATED BY TROUBLE CONDITION OF ANY SMOKE DETECTOR IDENTIFIED AS AIR DUCT DETECTOR IN DUCT.

PROVIDE EMERGENCY LIGHTING AS REQUIRED BY THE NEVADA STATE FIRE MARSHALL REGULATIONS, SEPARATE SOURCES OF POWER REQUIRED)

IF GREATER THAN 2000 CFM'S PROVIDE HVAC SMOKE DETECTOR SHUT DOWN AS REQUIRED BY UMC

AN APPROVED AUDIBLE/VISUAL SPRINKLER FLOW ALARM SHALL BE PROVIDED ON THE EXTERIOR OF THIS BUILDING IN AN APPROVED LOCATION. AN APPROVED AUDIBLE/VISUAL SPRINKLER FLOW ALARM SHALL BE PROVIDED IN THE INTERIOR OF THE BUILDING IN A NORMALLY OCCUPIED LOCATION. ACTUATION OF THE ALARM SHALL BE AS SET FORTH IN IBC CHAPTER 9.

PORTABLE FIRE EXTINGUISHERS REQUIRED PER NFPA 10 MAXIMUM TRAVEL DISTANCE TO AN EXTINGUISHER SHALL NOT EXCEED 75' EXCLUDING STAIRS.

PLANS FOR FIRE HYDRANTS, FIRE EXTINGUISHING SYSTEMS, FIRE ALARM SYSTEMS, MEDICAL GAS SYSTEMS, ON-SITE FIRE, WATER, AND FUEL TANKS MUST BE APPROVED BY FIRE DEPARTMENT BEFORE INSTALLATION.

KNOX BOX

ABBREVIATIONS

#	Pound Or Number	D.W.R.	Drawer	HR.	Hour	RESIL.	Resilient
#	Number	DBL.	Double	I.D.	Inside Diameter	RM.	Room
&	And	DEMO.	Demolition	INSUL.	Insulation	RSTR.	Register
@	At	DEPT.	Department	INT.	Interior	RWD.	Redwood
A.B.	Anchor Bolt	DET	Detail	JAN.	Janitor	S SK.	Service Sink
A.C.	Asphalt Concrete	DIA	Diameter	JT.	Joint	S.	South
A.D.	Area Drain	DIM	Dimension	K.O.	Knock Out	S.C.	Solid Core
A.F.F.	Above Finish Floor	DISP	Dispenser	KIT	Kitchen	S.C.E.	Seat Cover Dispenser
A.F.G.	Above Finish Grade	DN	Down	L.F.	Linear Foot	S.H.	Shelf
A.F.S.	Above Floor Slab	DR.	Door	L.K.R.	Locker	S.N.D.	Sanitary Napkin Dispenser
A.V.	Audio/Visual	DS.	Downspout	LAB.	Laboratory	SCHED.	Schedule
ABV.	Above	DWG.	Drawing	LAM	Laminate	SD.	Soap Dispenser
ACOUS.	Acoustical	E	East	LAV.	Lavatory	SECT.	Section
ACT.	Acoustical Ceiling Tile	E.J.	Expansion Joint	LT	Light	SHR.	Shower
ADJ.	Adjustable	E.L.	Elevation	M.C.	Medicine Cabinet	SHT.	Sheet
AGGR.	Aggregate	E.P.	Electric Panelboard	M.O.	Masonry Opening	SIM.	Similar
AL.	Aluminum	E.P.D.M.	Single Ply Roof Membrane	MAX.	Maximum	SPEC.	Specification
ANOD.	Anodized	E.W.	Each Way	MECH.	Mechanical	SQ.	Square
APPROX.	Approximate	E.W.C.	Electric Water Cooler	MEMB	Membrane	SST.	Stainless Steel
ARCH.	Architectural	EA	Each	MET.	Metal	STA.	Station
ASPH.	Asphalt	ELEC.	Electrical	MFR	Manufacturer	STD.	Standard
B.C.	Back Of Curb	EMER	Emergency	MH.	Manhole	STL.	Steel
B.M.	Bench Mark	ENCL.	Enclosure	MIN.	Minimum	STOR.	Storage
B.U.R.	Built Up Roof	EQ.	Equal	MIR.	Mirror	STRL.	Structural
BD.	Board	EQUIP.	Equipment	MISC.	Miscellaneous	SUSP.	Suspended
BITUM.	Bituminous	EXIST	Existing	MTD.	Mounted	SYM.	Symmetrical
BLDG.	Building	EXP.	Expansion	MUL.	Mullion	T & G	Tongue And Groove
BLK.	Block	EXPO	Exposed	N.	North	T.B.	Towel Bar
BLKG.	Blocking	EXT.	Exterior	N.I.C.	Not In Contract	T.E.R.	Telephone Equipment Room
BM.	Beam	F.A.	Fire Alarm	N.T.S.	Not To Scale	T.O.C.	Top Of Curb
BOT.	Bottom	F.B.	Flat Bar	NO.	Number	T.O.P.	Top Of Pavement
BRG.	Bearing	F.D.	Floor Drain	NOM.	Nominal	T.O.W	Top Of Wall
BTW.	Between	F.E.	Fire Extinguisher	O.C.	On Center	T.V.	Television
C.B.	Catch Basin	F.E.C.	Fire Extinguisher Cabinet	O.D.	Outside Diameter (Dim)	TEL.	Telephone
C.F.C.I.	Contractor Furnished / Contractor Installed	F.H.	Fire Hydrant	O.F.C.I.	Owner Furnished / Contractor Installed	THK.	Thick
C.F.O.I.	Contractor Furnished / Owner Installed	F.H.C.	Fire Hose Cabinet	O.F.O.I.	Owner Furnished / Owner Furnished	TRD.	Tread
C.G.	Corner Guard	F.O.C.	Face Of Concrete	OA.	Overall	TYP.	Typical
C.I.	Cast Iron	F.O.F	Face Of Finish	OBS.	Obscure	U.N.O.	Unless Noted Otherwise
C.J.	Construction Joint	F.O.M.	Face Of Masonry	OFF.	Office	UNFIN.	Unfinished
C.M.U.	Concrete Masonry Unit	F.O.S.	Face Of Studs	OPNG.	Opening	UR.	Urinal
C.O.	Clean Out	F.S.	Floor Sink	OPP.	Opposite	V.B.	Vapor Barrier
C.R.	Cold Rolled	FDN.	Foundation	P.B.	Peg Board	V.C.G.	Vinyl Corner Guard
C.T.	Ceramic Tile	FIN.	Finish	P.L.	Property Line	V.T.	Vinyl Tile
CAB.	Cabinet	FLASH.	Flashing	P.T.D.	Paper Towel Dispenser	VAR.	Varies
CEM.	Cement	FLR.	Floor	P.T.D/R	P.T.D. And Receptacle	VERT.	Vertical
CEM. PLAST.	Cement Plaster	FLUOR.	Fluorescent	P.T.R.	Paper Towel Receptacle	VEST.	Vestibule
CER.	Ceramic	FPRF	Fireproof	PL.	Plate	W.	West
CL	Center Line	FT.	Foot Or Feet	PLAM.	Plastic Laminate	W.C.	Water Closet
CLG.	Ceiling	FTG	Footing	PLUM.	Plumbing	W/	With
CLKG.	Caulking	FURR.	Furring	PLY. WD.	Plywood	W/O	Without
CLR.	Clear	FUT.	Future	PR.	Pair	WD.	Wood
CNTR.	Counter	G.B.	Grab Bar	PRECST.	Pre-Cast	WP.	Waterproof
COL.	Column	GA.	Gauge	PT.	Paint	WSCT.	Wainscot
CONC.	Concrete	GALV.	Galvanized	PTN	Partition	WT.	Weight
CONN.	Connection	GL.	Glass	Q.T.	Quarry Tile		
CONSTR.	Construction	GL. BLK.	Glass Block	R.	Riser		
CONT.	Continuous	GND.	Ground	R.D.	Roof Drain		
CORR.	Corridor	GR.	Grade	R.O.	Rough Opening		
CPT.	Carpet	GYP.	Gypsum	R.W.L.	Rain Water Leader		
CTR.	Counter	H.B.	Hose Bibb	RAD.	Radius		
CTSK.	Countersink	H.C.	Hollow Core	REF.	Reference		
D.F.	Drinking Fountain	H.M.	Hollow Metal	REFR.	Refrigerator		
D.O.	Door Opening	HDWD.	Hardwood	REINF.	Reinforced		
D.S.P.	Dry Standpipe	HDWE	Hardware	REQ.	Required		
		HGT.	Height				
		HORIZ.	Horizontal				

GENERAL REQUIREMENTS

1. THE GENERAL CONTRACTOR SHALL FIELD VERIFY EXISTING SITE CONDITIONS AND ADVISE THE ARCHITECT OF ANY DISCREPANCIES IN THE DIMENSIONS OR DRAWINGS PRIOR TO CONSTRUCTION.
2. THE GENERAL CONTRACTOR SHALL REVIEW THE CONTRACT DOCUMENTS AND ADVISE THE ARCHITECT OF ANY DISCREPANCIES IN THE DIMENSIONS OR DRAWINGS PRIOR TO CONSTRUCTION.
3. FEDERAL LAW REQUIRES THAT THE CONSTRUCTION MEET ALL REQUIREMENTS OF THE AMERICAN WITH DISABILITIES ACT GUIDELINES.
4. ALL PLAN DIMENSIONS ARE TO FACE OF STUDS, FACE OF CMU WALL OR CENTER LINE OF GRIDS UNLESS NOTED OTHERWISE.

SITE CONSTRUCTION NOTES

1. SITE PLAN INCLUDED FOR REFERENCE ONLY. ALL SITE CONDITIONS EXIST AND SHALL REMAIN AS-IS. CONTRACTOR SHALL MAKE PROVISIONS TO PROTECT EXISTING SITE WORK AND POOL STRUCTURE DURING CONSTRUCTION OR REPLACE DAMAGES. CONTRACTOR TO LIMIT USE OF HEAVY MACHINERY NEAR, IN, AND AROUND POOL TO PREVENT DAMAGES. IMPROVEMENTS TO MATCH EXISTING.
2. ACCESSIBLE EXTERIOR ROUTES AND PARKING FACILITIES EXIST AND SHALL REMAIN AS-IS
3. ARCHITECTURAL FINISHED FLOOR ELEVATIONS ASSUMED TO BE 100'-0." REFER TO APPROVED CIVIL DRAWINGS FOR PAD ELEVATIONS.
4. TOPS OF CONCRETE FLOOR SLABS SHALL BE A MIN. OF 6" ABOVE ADJACENT FINISH GRADE U.N.O.
5. TOPS OF CONCRETE FLOOR SLABS SHALL BE A MIN. OF 2" ABOVE ADJACENT CONCRETE FLATWORK EXCEPT AT DOORS AND ENTRANCES (UNLESS NOTED OTHERWISE)

DEMOLITION NOTES

1. DEMOLITION DRAWINGS ARE DIAGRAMMATIC ONLY, THEY HAVE BEEN PREPARED BASED ON INFORMATION FURNISHED BY OTHERS. THE FULL EXTENT OF DEMOLITION MAY NOT BE INDICATED. THE GENERAL CONTRACTOR SHALL VISIT THE SITE TO DETERMINE THE EXTENT, MEANS AND METHODS REQUIRED TO PROPERLY DEMOLISH AND COMPLETE THE NEW CONSTRUCTION.

FIRE SPRINKLER NOTES

1. THE GENERAL CONTRACTOR SHALL COORDINATE FIRE SPRINKLER HEAD LOCATIONS WITH MECHANICAL AND ELECTRICAL ITEMS. ALL HEADS SHALL BE CENTERED IN ACOUSTICAL TILES, WHERE OCCURS.
2. THE DOOR TO THE FIRE SPRINKLER RISER ROOM SHALL BE LABELED "FIRE SPRINKLER VALVE ROOM" IN MINIMUM 2" LETTERS.
3. ALL BUILDINGS WITH EITHER FIRE ALARM OR FIRE SPRINKLER SYSTEMS SHALL BE PROVIDED WITH A KNOX SERIES #3200 RECESSED KEY BOX FOR FIRE DEPARTMENT USE, AND THE DOOR(S) LEADING TO THE SPRINKLER RISER ROOM SHALL BE PROVIDED WITH A FIRE DEPARTMENT REFLECTIVE ALERT DECAL. ANY OTHER LOCKABLE DOORS MAY HAVE THEIR KEYS PLACED INTO THE KNOX BOX AND ALSO HAVE A REFLECTIVE DECAL. KEY BOXES SHALL BE INSTALLED ADJACENT TO THE MAIN DOORWAY, 5 FEET TO 6 1/2 FEET TO THE TOP OF THE BOX ABOVE FINISHED GRADE. ORDER FORMS ARE AVAILABLE FROM THE FIRE SAFETY DIVISION OR AT WWW.KNOXBOX.COM. INCLUDE AN ADEQUATE AMOUNT OF FIRE DEPARTMENT REFLECTIVE ALERT DECALS WHEN ORDERING.

ROOFING AND FLASHING NOTES

1. ALL MECHANICAL AND ELECTRICAL PENETRATIONS OF THE ROOF SHALL MEET WITH ROOFING MANUFACTURERS RECOMMENDATIONS TO MAINTAIN INTEGRITY OF ROOFING SYSTEM.
2. ALL TOPS OF PARAPETS TO BE PROVIDED WITH POSITIVE SLOPE TOWARDS ROOF FOR ADEQUATE DRAINAGE.
3. ALL FLASHING, COUNTER FLASHING AND SHEET METAL WORK TO COMPLY WITH THE MINIMUM STANDARDS PER THE CURRENT EDITION OF THE SMACNA MANUAL.

PAINTING NOTES

1. ITEMS ON EXTERIOR BUILDING WALLS: ELECT. CONDUIT, PIPING AND OTHER MISC. ITEMS ARE PAINTED TO MATCH ADJACENT SURFACE (UNLESS NOTED OTHERWISE)
2. EXTERIOR HOLLOW METAL DOORS AND FRAMES SHALL BE PAINTED ON BOTH THE EXTERIOR AND INTERIOR SIDES AS NOTED ON THE EXTERIOR.

ELECTRICAL SERVICE ROOMS

1. THE SERVICE DISCONNECTING MEANS SHALL BE INSTALLED IN A READILY ACCESSIBLE LOCATION ON THE EXTERIOR OF THE BUILDING, OR IT MAY BE INSTALLED WITHIN A DEDICATED ELECTRICAL EQUIPMENT ROOM WITH A DIRECT EXTERIOR ACCESS. IT SHALL BE LOCATED ADJACENT TO THE EXTERIOR DOOR. SUCH ROOMS SHALL BE A MINIMUM OF ONE-HOUR FIRE RESISTIVE CONSTRUCTION AND SHALL HAVE APPROVED FIRE DEPARTMENT ACCESS (E.G.-KNOX BOX). EACH SERVICE DISCONNECTING MEANS SHALL BE PERMANENTLY MARKED WITH 1" HIGH BY 1/4" STROKE LETTERS AND/OR NUMBERS INDICATING THE ADDRESS IT SERVES AND BE IDENTIFIED AS THE DISCONNECTING MEANS.

MATERIAL LEGEND

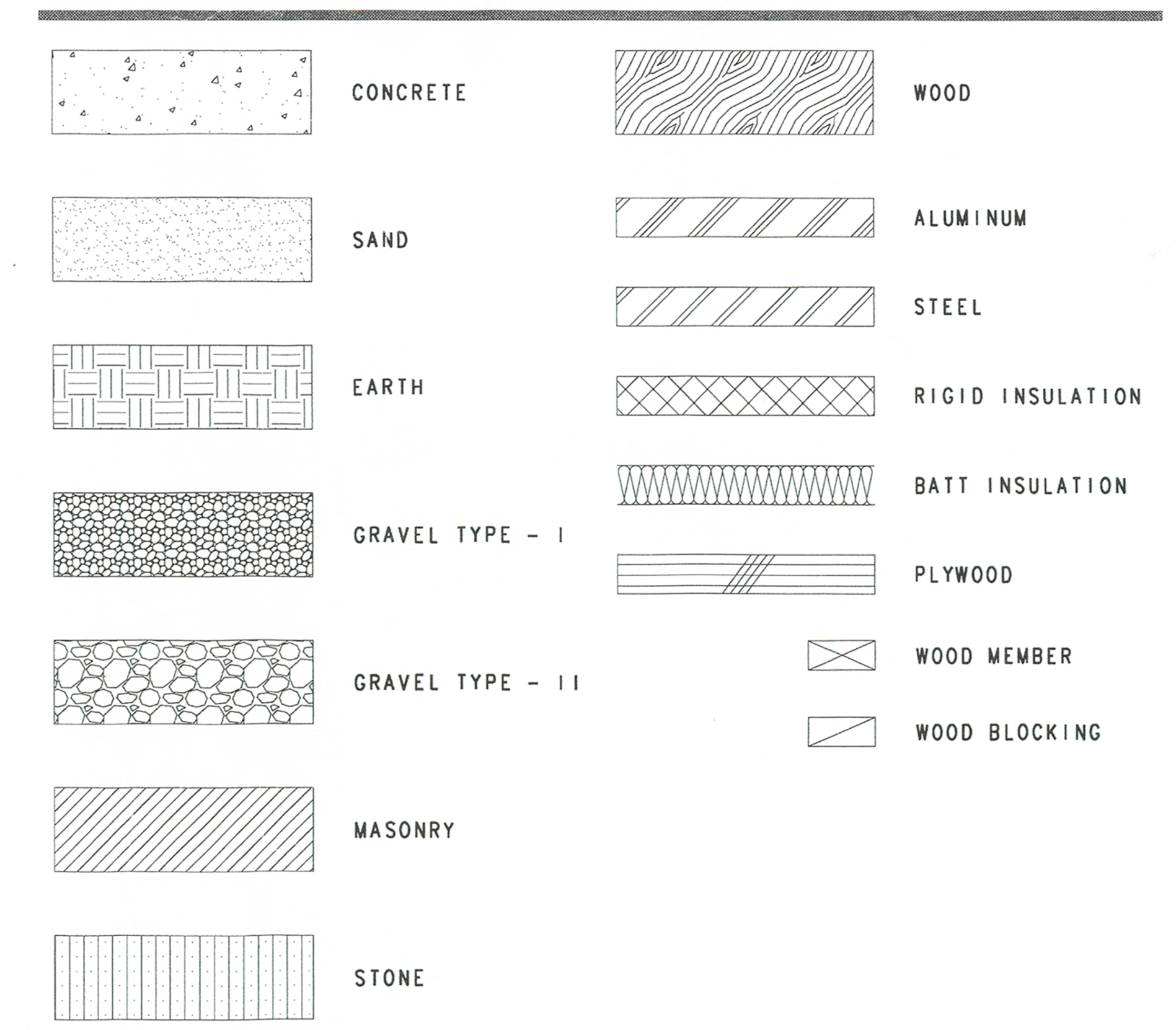

DOORS AND WINDOWS NOTES

1. EXIT DOORS SHALL BE OPENABLE FROM THE INSIDE WITHOUT THE USE OF A KEY OF ANY SPECIAL KNOWLEDGE OR EFFORT. KEY LOCKING HARDWARE MAY BE USED ON THE MAIN ENTRANCE IF THERE IS A READILY VISIBLE, DURABLE SIGN ON OR ADJACENT THE DOOR STATING "THIS DOOR TO REMAIN UNLOCKED WHEN THE BUILDING IS OCCUPIED".
2. DOOR OPERATING DEVICES SHALL BE LEVER OPERATED, PUSH TYPE OR U-SHAPED HANDLES.
3. THE BOTTOM 10" OF ALL DOORS SHALL BE PROVIDED WITH A SMOOTH SURFACE TO ALLOW THE DOOR TO BE OPENED WITH A WHEELCHAIR FOOTREST.
4. DOORWAYS SHALL HAVE A MINIMUM CLEAR OPENING OF 32 IN. WITH THE DOOR OPEN 90 DEGREES, MEASURED BETWEEN THE FACE OF THE DOOR AND THE OPPOSITE STOP.

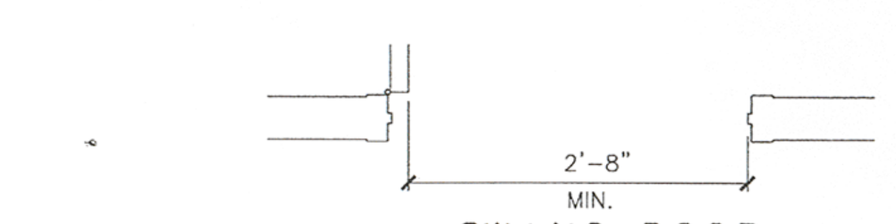

SWING DOOR

5. MANEUVERING CLEARANCES AT DOORS. MINIMUM MANEUVERING CLEARANCES AT DOORS THAT ARE NOT AUTOMATIC OR POWER ASSISTED SHALL BE AS SHOWN. THE FLOOR OR GROUND AREA WITHIN THE REQUIRED CLEARANCES SHALL BE LEVEL AND CLEAR.

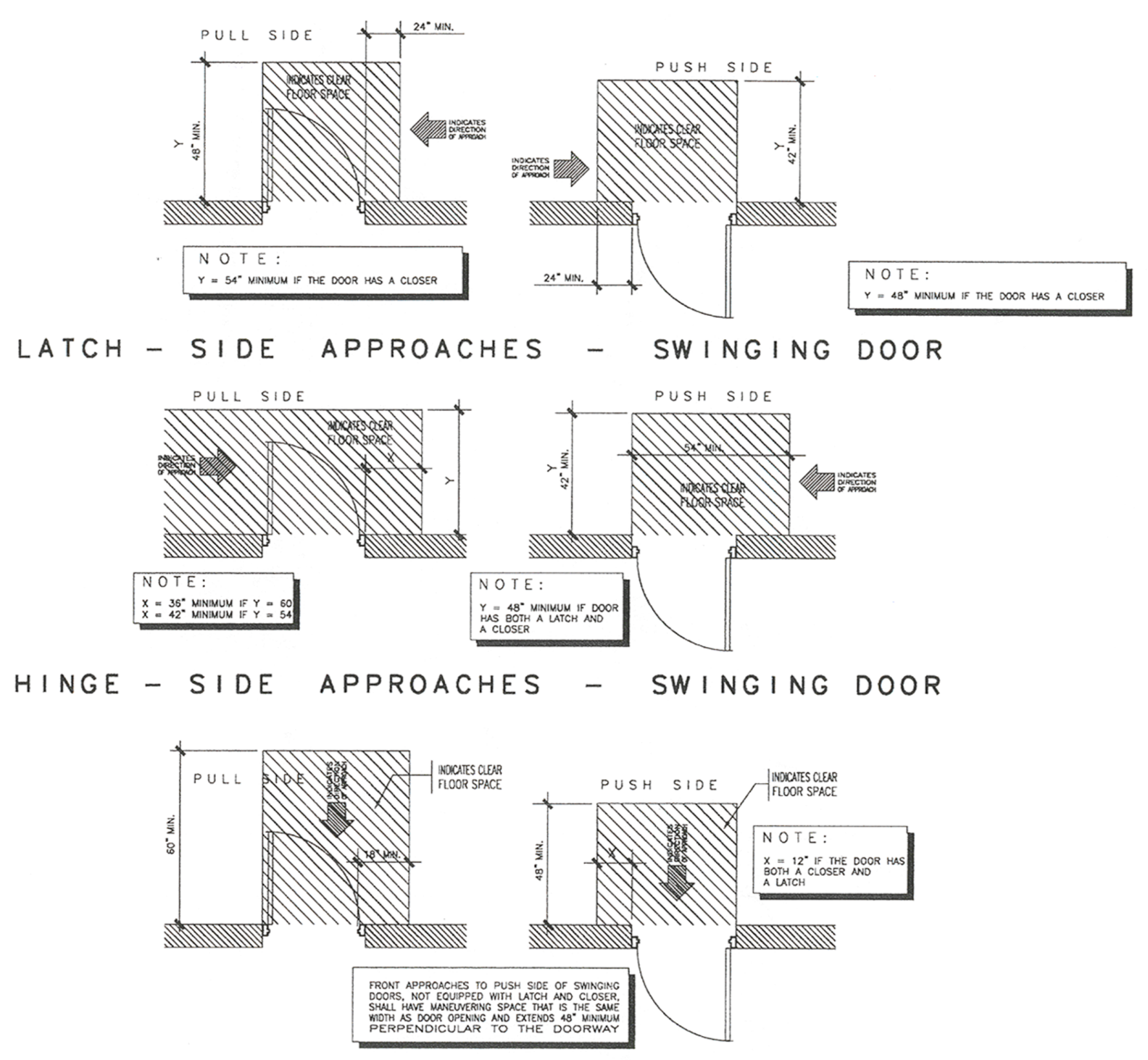

LATCH - SIDE APPROACHES - SWINGING DOOR

HINGE - SIDE APPROACHES - SWINGING DOOR

FRONT APPROACHES - SWINGING DOOR

6. THRESHOLDS AT DOORWAYS. THRESHOLDS AT DOORWAYS SHALL NOT EXCEED 1/2 IN. RAISED THRESHOLDS AND FLOOR LEVEL CHANGES AT ACCESSIBLE DOORWAYS SHALL BE BEVELED WITH A SLOPE NO GREATER THAN 1:2.
7. DOOR CLOSERS. IF A DOOR HAS A CLOSER, THEN THE SWEEP PERIOD OF THE CLOSER SHALL BE ADJUSTED SO THAT FROM AN OPEN POSITION OF 70 DEGREES, THE DOOR WILL TAKE AT LEAST 3 SECONDS TO MOVE TO A POINT 3 IN. FROM THE LATCH, MEASURES TO THE LEADING EDGE OF THE DOOR.
8. DOOR OPENING FORCE. THE MAXIMUM FORCE FOR PUSHING OR PULLING OPEN A DOOR SHALL BE AS FOLLOWS:

   (1) FIRED DOORS SHALL HAVE THE MINIMUM OPENING FORCE ALLOWABLE BY THE APPROPRIATE ADMINISTRATIVE AUTHORITY.

   (2) OTHER DOORS.
   (a) INTERIOR HINGED DOORS: 5 LBF
   (b) SLIDING OR FOLDING DOORS: 5 LBF
   THESE FORCES DO NOT APPLY TO THE FORCE REQUIRED TO RETRACT LATCH BOLTS OR DISENGAGE OTHER DEVICES THAT MAY HOLD THE DOOR IN A CLOSED POSITION
9. AUTOMATIC DOORS AND POWER ASSISTED DOORS. DOORS SHALL NOT OPEN TO BACK CHECK FASTER THAN 3 SECONDS AND SHALL REQUIRE NO MORE THAN 15 LBF TO STOP DOOR MOVEMENT.

SYMBOL LEGEND

Symbol	Description	Symbol	Description
⊕	DATUM POINT	SHEET #	INTERIOR ELEVATION TAG
100	DOOR NUMBER	0 / A-000	ELEVATION TAG
(100)	WINDOW NUMBER	DETAIL / SHEET #	DETAIL BUBBLE
[100]	ROOM NUMBER	DETAIL / SHEET #	DETAIL BUBBLE
⟨1⟩	ACCESSORY TAG	DETAIL / SHEET #	DETAIL BUBBLE
(XXX)	EQUIPMENT TAG	SECTION / SHEET #	BUILDING SECTION TAG
[1]	KEY NOTE	SECTION / SHEET #	WALL SECTION TAG
P1 / A4.1	TILTUP TAG	△1	REVISION CLOUD AND DELTA TAG
NORTH	NORTH ARROW	FEC	FIRE EXTINGUISHER CABINET
5 / 12	PITCH	SD	SMOKE DETECTOR
A 9'-0" (ACT-1)	CEILING TAG		
CPT. × CPT.	FLOORING TAG		
T.O. FIN. FLR. ELEV. 100'-0"	ELEVATION TAG		
T.O. FIN. FLR. ELEV. 100'-0"	ELEVATION TAG		
× T.O. FIN. FLR. ELEV. 100'-0"	EXIST. ELEVATION TAG		
(0)	GRID BUBBLE AND LINE		
⬡0	EXIST. GRID BUBBLE AND LINE		
◎	MATCH BUBBLE AND LINE		

FYI ONLY

PERMIT SET

REVISIONS

CONSULTANT

SH ARCHITECTURE
7373 Peak Drive Suite 250 Las Vegas Nevada 89128
ph 702.363.2222 fax 702.363.6060 www.sh-architecture.com

CITY OF LAS VEGAS
PAVILION POOL COVER
101 SOUTH PAVILION CENTER DRIVE
LAS VEGAS, NEVADA 89144

GENERAL NOTES, LEGENDS AND SHEET INDEX

STAMP
CURT JOHN CARLSON
REGISTERED
No. 8443
ARCHITECT
STATE OF NEVADA
MAR 26 2009

OWNER: CITY OF LAS VEGAS
DEPARTMENT OF PUBLIC WORKS
ARCHITECTURAL SERVICES

400 EAST STEWART AVENUE
LAS VEGAS, NEVADA 89101
PHONE: (702) 229-6535
FAX: (702) 384-4846
TDD: (702) 386-9108

DRAWN	MAP/JW
FILE	G1.10
DATE	03-26-09
SCALE	NONE
BID NO	07-15341.05
CLV DWG NO	107V3596-2
SHT NO	G1.10

REVISED 8/27/03

DRAWINGS AS INSTRUMENTS OF SERVICE ARE THE PROPERTY OF THE DESIGN PROFESSIONAL WHOSE STAMP OF CERTIFICATION APPEARS ON THE DRAWINGS AND SPECIFICATIONS ANY USE OR REPRODUCTION IN WHOLE OR IN PART WITHOUT WRITTEN CONSENT IS STRICTLY PROHIBITED COPIES OF THE DRAWINGS AND SPECIFICATIONS RETAINED BY THE CLIENT MAY BE UTILIZED ONLY FOR OCCUPYING THE PROJECT FOR WHICH THEY WERE PREPARED AND NOT FOR THE CONSTRUCTION OF ANY OTHER PROJECT N A C 623.780

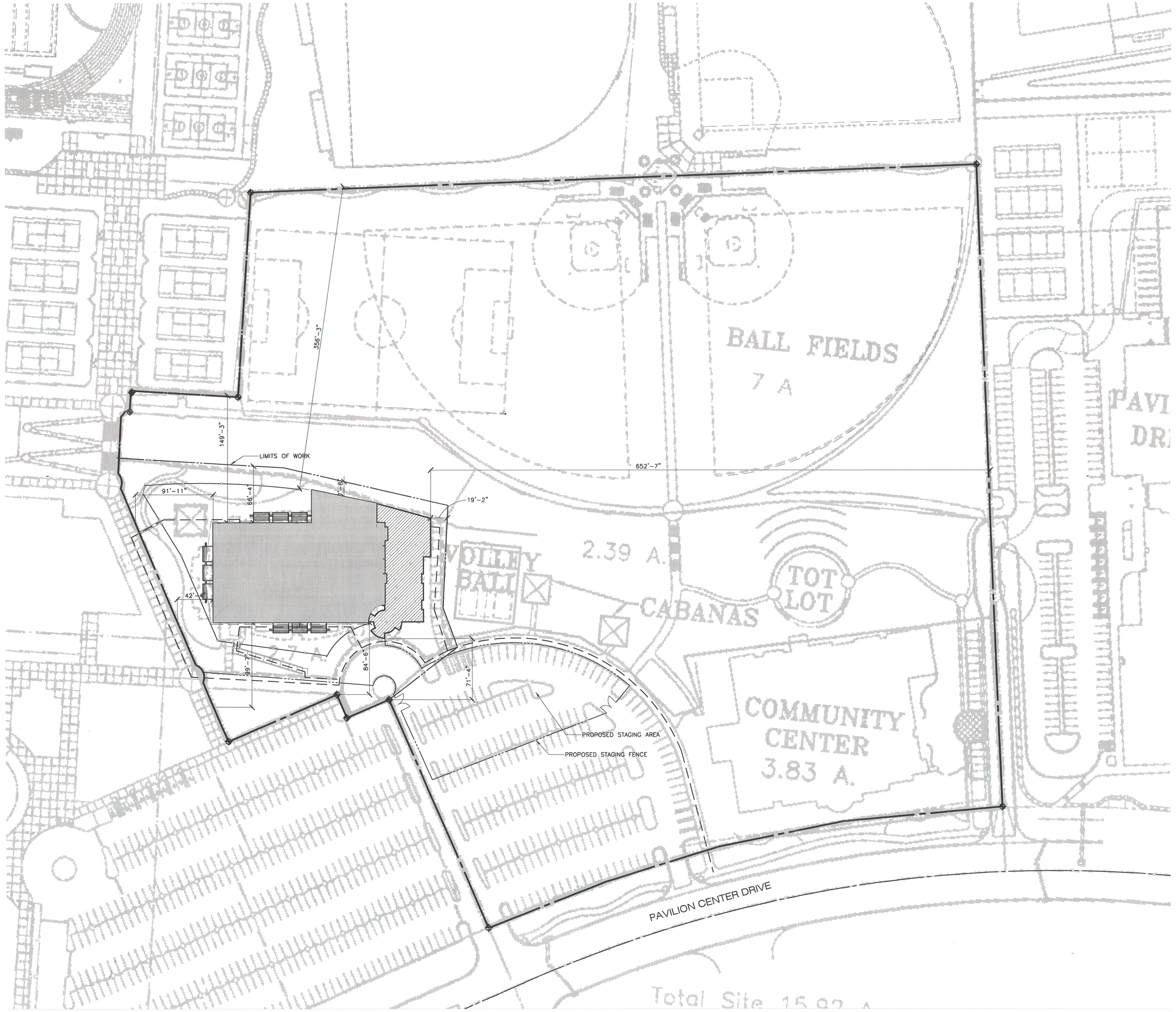

NORTH

OVERALL SITE PLAN
1"=50'-0"

SHEET NOTES

A. SEE A0.10 FOR EXISTING AND DEMOLITION CONDITIONS.

B. ALL SIDEWALKS ON SITE ARE TO BE ACCESSIBLE. SIDEWALKS ARE TO HAVE A MAXIMUM OF 4.5% SLOPE AND A 1.5% CROSS SLOPE.

SITE DATA

SITE INFORMATION	
ASSESSOR'S PARCEL NUMBER	13735501004
ZONING – EXISTING	P–C
SITE TABULATION	
SITE AREA (ACRES)	16.8 ACRES
LANDSCAPE AREA (ACRES)	EXISTING
BUILDING COVERAGE	
EXISTING	31,049 S.F.
ADDITION	1,548 S.F.
ACTUAL SITE COVERAGE	32,597 S.F.
PARKING TABULATION	
PARKING REQUIRED	EXISTING
ACCESSIBLE PARKING REQUIRED	EXISTING

SITE LEGEND

- PROPERTY LINE
- ACCESSIBLE MEANS OF EGRESS
- LIMITS OF WORK
- PROPOSED STAGING AREA
- PROPOSED POOL COVER AND ADDITION
- EXISTING BUILDING

APPROVED
except with plans for pool cover only
BY _____ 04/21/09
CURRENT PLANNING DIVISION
CITY OF LAS VEGAS

PLANS APPROVED
ARCHITECTURAL
Building & Safety Dept.
City of Las Vegas, Nevada
DATE APR 21 2009
Plan Review Required Before Work
Modification, Deviation or Change
Inspections Made By Official
Without Approved Plans
Must Be Present at Various Key Checkpoints

PERMIT SET

SH ARCHITECTURE
7373 Peak Drive Suite 250 Las Vegas, Nevada 89128
ph 702.363.2222 fax 702.363.6060
www.sh-architecture.com

ADDITIONS

CONSULTANT

CITY OF LAS VEGAS
PAVILION POOL COVER
101 SOUTH PAVILION CENTER DRIVE
LAS VEGAS, NEVADA 89144
OVERALL SITE PLAN

STAMP
CURT JOHN CARLSON
REGISTERED
No. 7844
ARCHITECT
STATE OF NEVADA
MAR 26 2009

OWNER: CITY OF LAS VEGAS
DEPARTMENT OF PUBLIC WORKS
ARCHITECTURAL SERVICES

400 EAST STEWART AVENUE
LAS VEGAS, NEVADA 89101
PHONE: (702) 229-6535
FAX: (702) 384-4846
TDD: (702) 386-9108

DRAWN	MAP/JM
FILE	G2.10
DATE	03-26-09
SCALE	1"=50'-0"
BID NO	07-15341.05
CLV DWG NO	107V3596-2
SHT NO	G2.10

REVISED 8/27/03

DRAWINGS AS INSTRUMENTS OF SERVICE ARE THE PROPERTY OF THE DESIGN PROFESSIONAL WHOSE STAMP OF CERTIFICATION APPEARS ON THE DRAWINGS AND SPECIFICATIONS RETAINED BY THE CLIENT MAY BE UTILIZED ONLY FOR OCCUPYING THE PROJECT FOR WHICH THEY WERE PREPARED AND NOT FOR THE CONSTRUCTION OF ANY OTHER PROJECT N A C 623.340
THE USE OR REPRODUCTION IN WHOLE OR IN PART WITHOUT WRITTEN CONSENT IS STRICTLY PROHIBITED COPIES OF THE DRAWINGS AND SPECIFICATIONS APPEARS ON THE

CLV APPROVED APPEAL

DISTRIBUTION:
White—Appeals File
Canary—Applicants Copy
Pink—Job File
Goldenrod—Inspector's Copy

CITY OF LAS VEGAS, NEVADA
BUILDING & SAFETY DEPARTMENT
731 S. 4th Street
Las Vegas, Nevada 89101
Telephone (702) 229-6251

I WILL APPEAR ☑
I WILL NOT APPEAR ☐

BUILDING OFFICIAL'S HEARING COMMITTEE

CASE NO.

DATE: 1-11-08

7:30 AM 1/15/08

DEPARTMENT EMPLOYEE FAMILIAR WITH PROJECT

*All petitions **MUST** be detailed on this form. Supporting data may be attached and submitted if desired, but all entries and statements on this form must be completed.*

PROJECT NAME: Pavilion Pool Cover

PROJECT ADDRESS: 101 Pavilion Center Drive

PERMIT OR LOG NO.

OWNER'S NAME: City of Las Vegas

OWNER'S ADDRESS: 400 Stewart Ave, Las Vegas, NV

ZIP CODE: 89101

PHONE: 229-6095

TENANT'S NAME (IF OTHER THAN OWNER)

TENANT'S ADDRESS

ZIP CODE

PHONE

APPELLANT'S NAME: Mike Pancirov

APPELLANT'S ADDRESS: 7373 Peak Drive #250 Las Vegas

ZIP CODE: 89128

PHONE: 362-2222

APPELLANT'S RELATIONSHIP TO PROJECT: Architect

Appeal is hereby made to the Building Official for a variance from, or Interpretation of, Section IBC 3306, TABLE 2902.1 of the City of Las Vegas Building Code which requires that:

THE BUILDING & SAFETY DEPARTMENT RECOGNIZE AND GRANT CONSIDERATION OF AN ACCEPTED APPEAL TO ALLOW FOR THE REDUCTION OF PLUMBING FIXTURES TO 8 WATER CLOSETS & 6 LAVATORIES FOR EACH SEX. THIS APPEAL TO PERMIT/LOG NO. C-73-02 WAS POSTED 4-19-02

Explanation of why conformance with the above requirement on this project presents an unusual problem. *(Use attachment if necessary)* THE PROJECT WAS DESIGNED & APPROVED WITH THE ABOVE-MENTIONED APPEAL. THE NEW SCOPE OF THIS PROJECT SIMPLY HAS US PLACING A CVER OVER THE EXISTING POOL. EVEN WITHOUT THE COVER, THE POOL & DECK HAVE AN OCCUPANT LOAD. PLACING A COVER OVER THE POOL DOES NOT CHANGE THIS OCCUPANT LOAD CALCULATION. HOWEVER, TO ADD RESTROOMS TO INSTALL COVER, IS NOT FEASIBLE.

State specifically what is proposed in lieu of literal compliance.
WE REQUEST THAT THE PREVIOUS APPEAL BE ALLOWED TO STAND IN OUR EFFORTS TO PLACE A COVER OVER EXISTING POOL.

OWNER'S SIGNATURE IF APPELLANT IS OTHER THAN OWNER, OWNER'S ARCHITECT OR ENGINEER — SIGNATURE OF APPELLANT — TITLE: Project Manager

DECISION OF THE BUILDING OFFICIAL

☐ Approved
☑ Approved with stipulations
☐ Denied

Stipulations

1) See Previous Appeal Above
2) Comply w/ 2006 IBC for Existing.
3) Existing Restroom Fixture Count is OK.

DATE: 1/15/08 — BUILDING OFFICIAL: Bob Vacl — TITLE: Plumb Fixture Count

SYS91-004/5/05 — 130-500 REV. 10/97

Site Built Windows

IECC Section 102.1.3. All fenestration products shall be rated and labeled by the manufacturer as to its U-value and SHGC rating. Commercial site built glazing shall be installed and sealed in accordance with the manufacturer's installation instructions, it's assembly listing and Section 502.14.3 of the IECC.

NOTE: All unlabeled site-built window assemblies must be certified by a NFRC member rater. A certification letter, listing the window assembly U-Values and SHGC coefficients for each type of window used must be provided to the field inspector at insulation inspection.

NOTE: ALL WINDOWS, INCLUDING KALWALL PLASTIC THERMAL PANELS, REQUIRE NFRC LABELING.

Fenestration Labeling Required: All **windows, doors and skylights** shall be rated by the National Fenestration Rating Council and labeled by the manufacturer with regard to **U-factors, solar heat gain coefficient and air leakage rate**. The labels are to remain on the windows for verification by the field building inspector. If labels have been removed from the fenestrations, then the IECC Envelope Compliance Report must be recalculated and re-submitted showing corrected default values per IECC Tables 102.1.3(1-3).

IECC REPORT-ENVELOPE

COMcheck Software Version 3.4.2

Envelope Compliance Certificate

90.1 (2004) Standard

Report Date: 04/20/09

Data filename: C:\DOCUME~1\achan\Desktop\PAVILI~1.CCK

Section 1: Project Information

Project Title: Pavilion Pool

Construction Site:	Owner/Agent:	Designer/Contractor:
101 Pavilion Center Las Vegas, NV	Pat Batte City of Las Vegas - OAS 400 Stewart Avenue Las Vegas, NV 89101 702-229-1046 pbatte@LasVegasNevada.GOV	Mike Pancirov SH Architecture 7373 Peak Drive #250 Las Vegas, NV 89128 363-2222 mpancirov@sh-architecture.com

Section 2: General Information

Building Location (for weather data):	**Las Vegas, Nevada**
Heating Degree Days (base 65 degrees F):	**2652**
Cooling Degree Days (base 50 degrees F):	**6091**
Building Type for Envelope Requirements:	**Non-Residential**
Project Type:	**Addition**
Vertical Glazing / Wall Area Pct :	**41%**

Activity Type(s)	Floor Area
Gymnasium/Exercise Center:Playing Area	23923

Section 3: Requirements Checklist

Envelope PASSES: Design 1% better than code

Climate-Specific Requirements:

Component Name/Description	Gross Area or Perimeter	Cavity R-Value	Cont. R-Value	Proposed U-Factor	Budget U-Factor
Orientation: NORTH					
North Wall 8": Concrete Block 8", Partially Grouted, Cells Insulated,Medium Density , Furring: None	3536	---	0.0	0.350	0.151
Kalwall: Metal Frame with Thermal Break:Double Pane, Clear, Fixed, SHGC 0.19, PF 0.12	665	---	---	0.230	0.460
Orientation: EAST					
East Wall 12": Concrete Block:12", Partially Grouted, Cells Insulated,Medium Density , Furring: None	1941	---	0.0	0.280	0.151
Kalwall: Metal Frame with Thermal Break:Double Pane, Tinted, Fixed, SHGC 0.23, PF 1.62	480	---	---	0.230	0.460
East Wall 8": Concrete Block:8", Partially Grouted, Cells Insulated,Medium Density , Furring: None	1792	---	0.0	0.350	0.151
Storefront Glazing: Metal Frame:Double Pane with Low-E, Tinted, Fixed, SHGC 0.41, PF 0.05	378	---	---	0.290	0.460
Overhead Glass Door: Glass, Tinted, SHGC 0.41, PF 0.02	372	---	---	0.290	0.460
Storefront Door: Glass, Clear, SHGC 0.41, PF 0.02	252	---	---	0.290	0.460
Orientation: SOUTH					
South Wall 12": Concrete Block:12", Partially Grouted, Cells Insulated,Medium Density , Furring: None	2276	---	0.0	0.280	0.151
Kalwall: Metal Frame with Thermal Break:Double Pane, Clear, Fixed, SHGC 0.07, PF 0.42	1436	---	---	0.100	0.460
South Wall 8": Concrete Block:8", Partially Grouted, Cells Insulated,Medium Density , Furring: None	1260	---	0.0	0.350	0.151
Storefront Glazing - High: Metal Frame:Double Pane with Low-E, Tinted, Fixed, SHGC 0.41, PF 0.35	210	---	---	0.290	0.460
Storefront Glazing - Low: Metal Frame:Double Pane with Low-E, Tinted, Fixed, SHGC 0.41, PF 0.05	252	---	---	0.290	0.460
Overhead Glass Door: Glass, Tinted, SHGC 0.41, PF 0.02	372	---	---	0.290	0.460
Storefront Door: Glass, Tinted, SHGC 0.41, PF 0.02	252	---	---	0.290	0.460
Orientation: WEST					
West Wall 12": Concrete Block:12", Partially Grouted, Cells Insulated,Medium Density , Furring: None	2608	---	0.0	0.280	0.151
Kalwall: Metal Frame with Thermal Break:Double Pane, Tinted, Fixed, SHGC 0.23, PF 1.62	527	---	---	0.230	0.460
West Wall 8": Concrete Block:8", Partially Grouted, Cells Insulated,Medium Density , Furring: None	1484	---	0.0	0.350	0.151
Storefront - Low: Metal Frame:Double Pane with Low-E, Tinted, Fixed, SHGC 0.41, PF 0.05	126	---	---	0.290	0.460
Overhead Glass Door: Glass, Tinted, SHGC 0.41, PF 0.40	568	---	---	0.290	0.460
Storefront Door: Glass, Tinted, SHGC 0.41, PF 0.02	252	---	---	0.290	0.460
Orientation: UNSPECIFIED ORIENTATION					
Roof 1: Metal Building, Standing Seam	25967	0.0	48.0 c.cont.	0.020	0.065
Skylight 1: Other, Plastic, Tinted with Curb, SHGC 0.11	5960	---	---	0.140	1.300
Floor 1: Slab-On-Grade Unheated	23923	---	---	---	---

(a) Budget U-factors are used for software baseline calculations ONLY, and are not code requirements.

Insulation:

☐ 1. Open-blown or poured loose-fill insulation has not been used in attic roof spaces with ceiling slope greater than 3 in 12.
☐ 2. Wherever vents occur, they are baffled to deflect incoming air above the insulation.
☐ 3. Recessed lights, equipment and ducts are not affecting insulation thickness.
☐ 4. No roof insulation is installed on a suspended ceiling with removable ceiling panels.
☐ 5. All exterior insulation is covered with protective material.
☐ 6. Cargo and loading dock doors are equipped with weather seals.

Fenestration and Doors:

☐ 7. Windows and skylights are labeled and certified by the manufacturer for U-factor and SHGC.
☐ 8. Fixed windows and skylights unlabeled by the manufacturer have been site labeled using the default U-factor and SHGC.
☐ 9. Other unlabeled vertical fenestration, operable and fixed, that are unlabeled by the manufacturer have been site labeled using the default U-factor and SHGC. No credit has been given for metal frames with thermal breaks, low-emissivity coatings, gas fillings, or insulating spacers.

Air Leakage and Component Certification:

☐ 10. All joints and penetrations are caulked, gasketed, weather-stripped, or otherwise sealed.
☐ 11. Windows, doors, and skylights certified as meeting leakage requirements.
☐ 12. Component R-values & U-factors labeled as certified.
☐ 13. Building entrance doors have a vestibule and equipped with closing devices.
Exceptions:
Buildings less than four stories above grade. Building entrances with revolving doors.
Doors that open directly from a space less than 3000 sq. ft. in area
☐ 14. Insulation installed according to manufacturer's instructions, in substantial contact with the surface being insulated, and in a manner that achieves the rated R-value without compressing the insulation.

Section 4: Compliance Statement

Compliance Statement: The proposed envelope design represented in this document is consistent with the building plans, specifications and other calculations submitted with this permit application. The proposed envelope system has been designed to meet the 90.1 (2004) Standard requirements in COMcheck Version 3.4.2 and to comply with the mandatory requirements in the Requirements Checklist.

Name - Title | Signature | Date

Pavilion Pool — Page 2 of 6

Compliance Statement: The proposed envelope design represented in this document is consistent with the building plans, specifications and other calculations submitted with this permit application. The proposed envelope system has been designed to meet the 90.1 (2004) Standard requirements in COMcheck Version 3.4.2 and to comply with the mandatory requirements in the Requirements Checklist.

Name - Title | Signature | Date

Pavilion Pool — Page 2 of 2

CODE ANALYSIS

APPLICABLE BUILDING CODES

BUILDING CODE:	2006 IBC
ELECTRICAL CODE:	2005 NEC
MECHANICAL CODE:	2006 UMC
PLUMBING CODE:	2006 UPC
FIRE CODE:	2003 UFC
ENERGY CODE:	2006 IECC

OCCUPANCY GROUP(S)

A-3

OCCUPANCY SEPARATION

N/A

SPECIFIC REQUIREMENTS - OCCUPANCY GROUP

TABLE 414.2.5 CONTROL AREAS FOR CORROSIVES < 975 GALLONS

TYPE OF CONSTRUCTION

TYPE II-B

SPECIFIC REQUIREMENTS - CONSTRUCTION GROUP

SECTION 907.2.1.1 VOICE/ALARM

AUTOMATIC SPRINKLER SYSTEM

SECTION 903.2.1.3 AUTO SPRINKLER SYSTEM PROVIDED

FIRE RESISTIVE REQUIREMENTS

STRUCTURAL FRAME	0 HR
BEARING WALLS - EXTERIOR	0 HR
BEARING WALLS - INTERIOR	0 HR
NON-BEARING WALLS	0 HR
FLOOR CONSTRUCTION	0 HR
ROOF CONSTRUCTION	0 HR
SHAFTS	0 HR

NOTE: FULLY SPRINKLERED BUILDINGS

Per CLV fire ordinance, insure full coverage of sprinkler system in all existing, new and remodeled fire areas within this building. Separate plans and permits are required for all new or altered systems.

LOCATION ON PROPERTY

BUILDING SIDE	ACTUAL DISTANCE
NORTH	652'-7"
SOUTH	91'-11"
EAST	71'-4"
WEST	356'-3"

ALLOWABLE AREA

GROUP A-3 BUILDINGS SHALL BE UNLIMITED PER SECTION 507.6 EXCEPTIONS.

ACTUAL AREA

25,471

OCC. GROUP	ALLOWABLE	ACTUAL	
A-3	UNLIMITED	25,471	SF

HEIGHT AND NUMBER OF STORIES

OCC. GROUP	ALLOWED HT.	ACTUAL HT.	ALLOWED STORIES	ACTUAL STORIES
A-3	55'-0"	FEET	2	1

PROTECTION OF OPENINGS IN EXTERIOR WALLS

BUILDING SIDE	DISTANCE	REQ'D RATING
NORTH	FEET	0 HR
SOUTH	FEET	0 HR
EAST	FEET	0 HR
WEST	FEET	0 HR

ROOF CLASSIFICATION

TABLE 1505.1 CLASS C

REQUIRED PLUMBING FACILITIES - SEE APPROVED APPEAL

OCC. GROUP	MALE WC/LAVS	FEMALE WC/LAVS	DRINKING FOUNTAINS
EXISTING	10 WC / 4 LAVS	10 WC / 5 LAVS	2 DF

PROVIDED PLUMBING FACILITIES

MALE WC/LAVS	FEMALE WC/LAVS	DRINKING FOUNTAINS
10 WC / 4 LAVS	10 WC / 5 LAVS	8 DF

OCCUPANT LOAD

POOL	240
POOL DECK	701
INCIDENTAL AREA	9
TOTAL	950

PER ICC ES REPORT FOR KAL WALL

METAL-SPAN ROOF SYSTEM W/ 0" HIGH BERMS PAN

PLANS APPROVED ARCHITECTURAL Public Works Dept. Las Vegas, Nevada APR 21 2009

Approval of Construction Documents or Off-Site Improvements Make No Changes Without Approval From the Public Works Director

SH ARCHITECTURE
7373 Peak Drive Suite 250 Las Vegas Nevada 89128
ph 702.363.2222 fax 702.363.8060 www.sh-architecture.com

REVISIONS

CONSULTANT

CITY OF LAS VEGAS
PAVILION POOL COVER
101 SOUTH PAVILION CENTER DRIVE
LAS VEGAS, NEVADA 89144
IECC CERTIFICATE AND CODE ANALYSIS

THESE PLANS AND SPECIFICATIONS ARE THE PROPERTY OF THE DESIGN PROFESSIONAL WHOSE STAMP OF CERTIFICATION APPEARS ON THE DRAWINGS AND SPECIFICATIONS RETAINED BY THE SAME. ANY USE OR REPRODUCTION IN WHOLE OR IN PART WITHOUT WRITTEN CONSENT IS STRICTLY PROHIBITED EXCEPT BY THE OWNER FOR THE PROJECT FOR WHICH THEY WERE PREPARED AND NOT FOR THE CONSTRUCTION OF ANY OTHER PROJECT. © A.C. 623-1761

PERMIT SET

STAMP

JOHN CARLSON — CURT — REGISTERED — No. 7448 — ARCHITECT — STATE OF NEVADA

MAR 26 2009

OWNER: CITY OF LAS VEGAS
DEPARTMENT OF PUBLIC WORKS
ARCHITECTURAL SERVICES

400 EAST STEWART AVENUE
LAS VEGAS, NEVADA 89101
PHONE: (702) 229-6535
FAX: (702) 384-4846
TDD: (702) 386-9108

DRAWN	MAP/JW
FILE	G2.11
DATE	03-26-09
SCALE	NONE
BID NO	07-15341.05
CLV DWG NO	107V3596-2
SHT NO	G2.1

REVISED 8/27/03

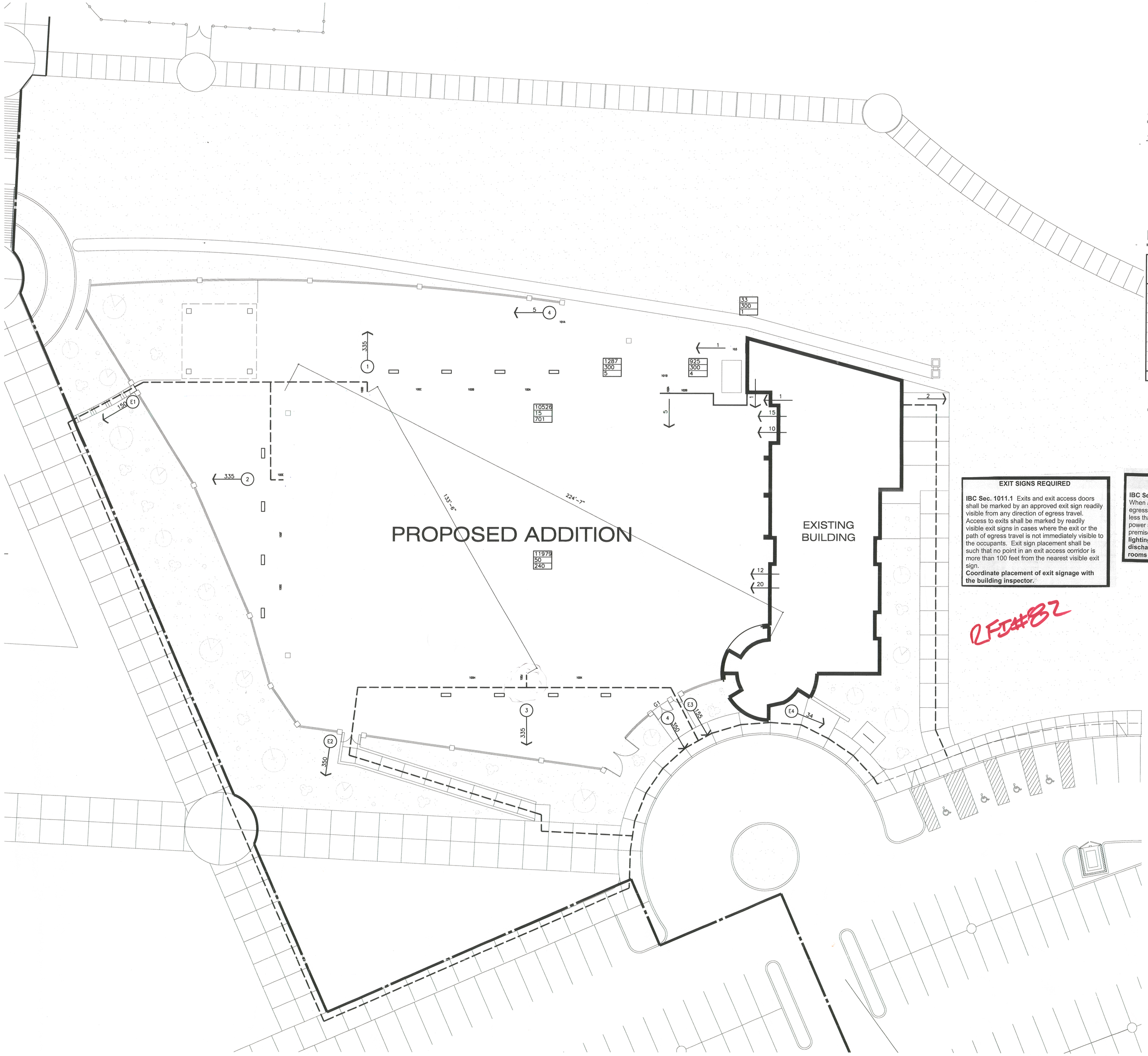

SHEET NOTES

A. SEE A0.10 FOR EXISTING AND DEMOLITION CONDITIONS.

B. ALL SIDEWALKS ON SITE ARE EXISTING AND SHALL REMAIN AS IS. ANY SIDWALKS TO BE REPLACED SHALL BE ACCESSIBLE. SIDEWALKS ARE TO HAVE A MAXIMUM OF 4.5% SLOPE AND A 1.5% CROSS SLOPE.

C. ALL EXITING FOR EXISTING STRUCTURE IS TO REMAIN AS PROVIDED U.N.O.

D. RECREATIONAL AREA SHALL NOT EXCEED 324 OCCUPANTS.

SYMBOLS LEGEND

SYMBOL	DESCRIPTION
	OCCUPANCY ROOM TAG: – SQUARE FOOTAGE OF SPACE – OCCUPANT LOAD FACTOR – NUMBER OF OCCUPANTS (N/C = NON-CONTRIBUTING LOAD)
#	NUMBER OF OCCUPANTS EXITING TAG

EXIT DOOR KEY (#)

EXIT NUMBER	OCCUPANCY SERVED	EGRESS WIDTH FACTOR	WIDTH REQ'D (IN.)	WIDTH PROV. (IN.)	EXIT CAPACITY
1	A-3	0.15	50.25	65	433
2	A-3	0.15	50.25	65	433
3	A-3	0.15	50.25	65	433
4	A-3	0.2	70	87	435
E1	A-3	0.2	30	34	170
E2	A-3	0.2	70	91	455
E3	A-3	0.2	30	34	170
E4	A-3	0.15	6.8	65	433

EXIT NUMBERS PREFIXED W/ AN "E" ARE EXISTING AND EQUIPPED W/ PANIC HARDWARE.

SITE LEGEND

EXISTING PATH OF EGRESS

PROPERTY LINE

EXIT SIGNS REQUIRED

IBC Sec. 1011.1 Exits and exit access doors shall be marked by an approved exit sign readily visible from any direction of egress travel. Access to exits shall be marked by readily visible exit signs in cases where the exit or the path of egress travel is not immediately visible to the occupants. Exit sign placement shall be such that no point in an exit access corridor is more than 100 feet from the nearest visible exit sign.
Coordinate placement of exit signage with the building inspector.

RFI#82

Emergency Lighting Required

IBC Sec. 1006 Means of Egress Illumination. When a building is occupied, the means of egress shall be illuminated at an intensity of not less than 1 foot-candle at the floor level. The power supply shall normally be provide by the premises' electrical supply. **Note: Emergency lighting shall be supplied at exterior exit discharge and in all bathrooms, changing rooms and like facilities.**

Panic Hardware Required

IBC Sec. 1008.1.9 Where panic and fire exit hardware is installed it shall comply with the following: 1. The actuating portion of the releasing device shall extend at least one-half of the door leaf width. 2. A maximum unlatching force of 15 pounds.

Each door in the means of egress from an occupancy of Group A and E having an occupant load of 100 or more and any occupancy of Group H-1, H-2, H-3 or H-5 shall not be provided with a latch or lock unless it is panic hardware or fire exit hardware.

If balanced doors are used and panic hardware is required, the panic hardware shall be the push-pad type and the pad shall not extend more than one-half the width of the door measured from the latch side.

PLANS APPROVED
ARCHITECTURAL
Building & Safety Dept.
City of Las Vegas, Nevada

DJV: APR 2 1 2009

Plans for mechanical, plumbing, electrical systems or the site have not been reviewed. Do not Construct Anything Pertaining to These Items Under These Approved Plans

Not a permit to Violate Any Ordinance

NORTH

EXITING PLAN
1/16" = 1'-0"

PERMIT SET

REVISIONS

CONSULTANT

SH ARCHITECTURE
7373 Peak Drive Suite 250 Las Vegas Nevada 89128
ph: 702.363.2222 fax: 702.363.8080 www.sh-architecture.com

CITY OF LAS VEGAS
PAVILION POOL COVER
101 SOUTH PAVILION CENTER DRIVE
LAS VEGAS, NEVADA 89144

EXITING PLAN

STAMP

CURT JOHN CARLSON
No. 9449
REGISTERED ARCHITECT
STATE OF NEVADA
MAR 2 6 2009

OWNER: CITY OF LAS VEGAS
DEPARTMENT OF PUBLIC WORKS
ARCHITECTURAL SERVICES

400 EAST STEWART AVENUE
LAS VEGAS, NEVADA 89101
PHONE: (702) 229-6535
FAX: (702) 384-4846
TDD: (702) 386-9108

DRAWN	MAP/JW
FILE	A1.10
DATE	03-26-09
SCALE	1/16"=1'-0"
BID NO	07-15341.05
CLV DWG NO	107V3596-2
SHT NO	G2.12

DRAWINGS AS INSTRUMENTS OF SERVICE ARE THE PROPERTY OF THE DESIGN PROFESSIONAL WHOSE STAMP OF CERTIFICATION APPEARS ON THE DRAWINGS AND SPECIFICATIONS RETAINED BY THE CLIENT MAY BE UTILIZED ONLY FOR OCCUPYING THE PROJECT FOR WHICH THEY WERE PREPARED AND NOT FOR THE CONSTRUCTION OF ANY OTHER PROJECT N.A.C. 623.7995 WRITTEN CONSENT IS STRICTLY PROHIBITED COPIES OF THE DRAWINGS AND SPECIFICATIONS APPEARS ON THE DRAWINGS AND SPECIFICATIONS ANY USE OR REPRODUCTION IN WHOLE OR IN PART WITHOUT WRITTEN CONSENT IS STRICTLY PROHIBITED

REVISED 8/27/03

WL-1

2006 IBC TABLE 720.1(2)
RATED FIRE-RESISTANCE PERIODS FOR VARIOUS WALLS AND PARTITIONS [a,o,p]

MATERIAL	ITEM NUMBER	CONSTRUCTION	MINIMUM FINISHED THICKNESS FACE-TO-FACE[b] (inches) 4 hour	3 hour	2 hour	1 hour
1. Brick of clay or shale	1-1.1	Solid brick of clay or shale[c]	6	4.9	3.8	2.7
	1-1.2	Hollow brick, not filled.	5.0	4.3	3.4	2.3
	1-1.3	Hollow brick unit wall, grout or filled with perlite vermiculite or expanded shale aggregate.	6.6	5.5	4.4	3.0
	1-2.1	4″ nominal thick units at least 75 percent solid backed with a hat-shaped metal furring channel $^{3}/_{4}$″ thick formed from 0.021″ sheet metal attached to the brick wall on 24″ centers with approved fasteners, and $^{1}/_{2}$″ Type X gypsum wallboard attached to the metal furring strips with 1″-long Type S screws spaced 8″ on center.	—	—	5[d]	—
2. Combination of clay brick and load-bearing hollow clay tile	2-1.1	4″ solid brick and 4″ tile (at least 40 percent solid).	—	8	—	—
	2-1.2	4″ solid brick and 8″ tile (at least 40 percent solid).	12	—	—	—
3. Concrete masonry units	3-1.1[f, g]	Expanded slag or pumice.	4.7	4.0	3.2	2.1
	3-1.2[f, g]	Expanded clay, shale or slate.	5.1	4.4	3.6	2.6
	3-1.3[f]	Limestone, cinders or air-cooled slag.	5.9	5.0	4.0	2.7
	3-1.4[f, g]	Calcareous or siliceous gravel.	6.2	5.3	4.2	2.8

FIRE STOP PENETRATION SCHEDULE

PENETRATION MATERIALS	LISTED ASSEMBLY	SIZE LIMITATION	F RATING	PRODUCT	UL SYSTEM NUMBER	DETAIL NUMBER
SINGLE METAL PIPES OR CONDUIT	WL-1	SEE NOTE #3 ON UL TEST C-AJ-1226	3-HR.	FS-ONE	C-AJ-1226	18 / G3.10
SINGLE NONMETALLIC PIPE OR CONDUIT	WL-1	SEE NOTE #2 ON UL TEST C-AJ-2109	3-HR.	FIRE STOP COLLAR	C-AJ-2109	20 / G3.10

CAJ 1226

System No. C-AJ-1226
F RATING = 3-HR.
T RATING = 0-HR.
L Rating At Ambient – Less than 1 CFM/Sq Ft
L Rating At 400 F – 4 CFM/Sq Ft

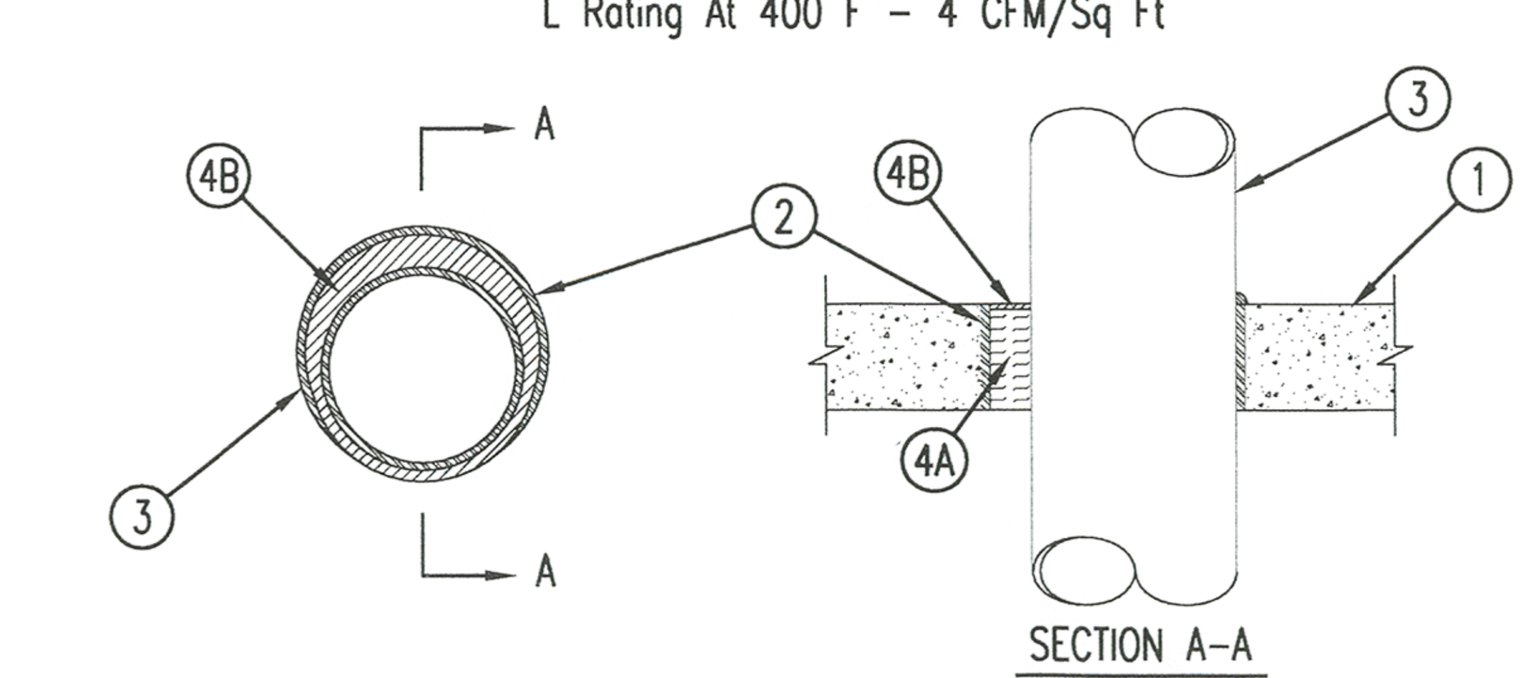

1. Floor or Wall Assembly Min 4-1/2 in. thick reinforced lightweight or normal weight (100-150 pcf) concrete. Wall may also be constructed of any UL Classified Concrete Blocks*. Max diam of opening is 32 in.
2. Metallic Sleeve (Optional) Nom 32 in. diam (or smaller) Schedule 40 (or heavier) steel sleeve cast or grouted into floor or wall assembly, flush with floor or wall surfaces.
3. Through-Penetrant One metallic pipe or conduit to be installed either concentrically or eccentrically within the firestop system. The annular space between pipe or conduit and periphery of opening shall be min 0 in. (point contact) to max 1-7/8 in. Pipe may be installed with continuous point contact. Pipe or conduit to be rigidly supported on both sides of floor or wall assembly. The following types and sizes of metallic pipes or conduits may be used:
   - A. Steel Pipe Nom 30 in. diam (or smaller) Schedule 10 (or heavier) steel pipe.
   - B. Iron Pipe Nom 30 in. diam (or smaller) cast or ductile iron pipe.
   - C. Copper Pipe Nom 6 in. diam (or smaller) Regular (or heavier) copper pipe.
   - D. Copper Tubing Nom 6 in. diam (or smaller) Type L (or heavier) copper tubing.
   - E. Conduit Nom 6 in. diam (or smaller) steel conduit.
   - F. Conduit Nom 4 in. diam (or smaller) steel electrical metallic tubing (EMT).
4. Firestop System The firestop system shall consist of the following:
   - A. Packing Material Min 4 in. thickness of min 4 pcf mineral wool batt insulation firmly packed into opening as a permanent form. Packing material to be recessed from top surface of floor or from both surfaces of wall as required to accommodate the required thickness of fill material.
   - B. Fill, Void or Cavity Material* -- Sealant Min 1/4 in. thickness of fill material applied within the annulus, flush with top surface of floor or with both surfaces of wall. At the point or continuous contact locations between pipe and concrete, a min 1/4 in. diam bead of fill material shall be applied at the concrete/pipe interface on the top surface of floor and on both surfaces of wall.
   HILTI CONSTRUCTION CHEMICALS, DIV OF
   HILTI INC – FS-One Sealant

*Bearing the UL Classification Marking

DETAIL (18)
1/8" = 1'-0"

CAJ 2109

System No. C-AJ-2109
F Rating – 3 Hr
T Ratings – 0, 2 & 3 Hr (See Item 2)

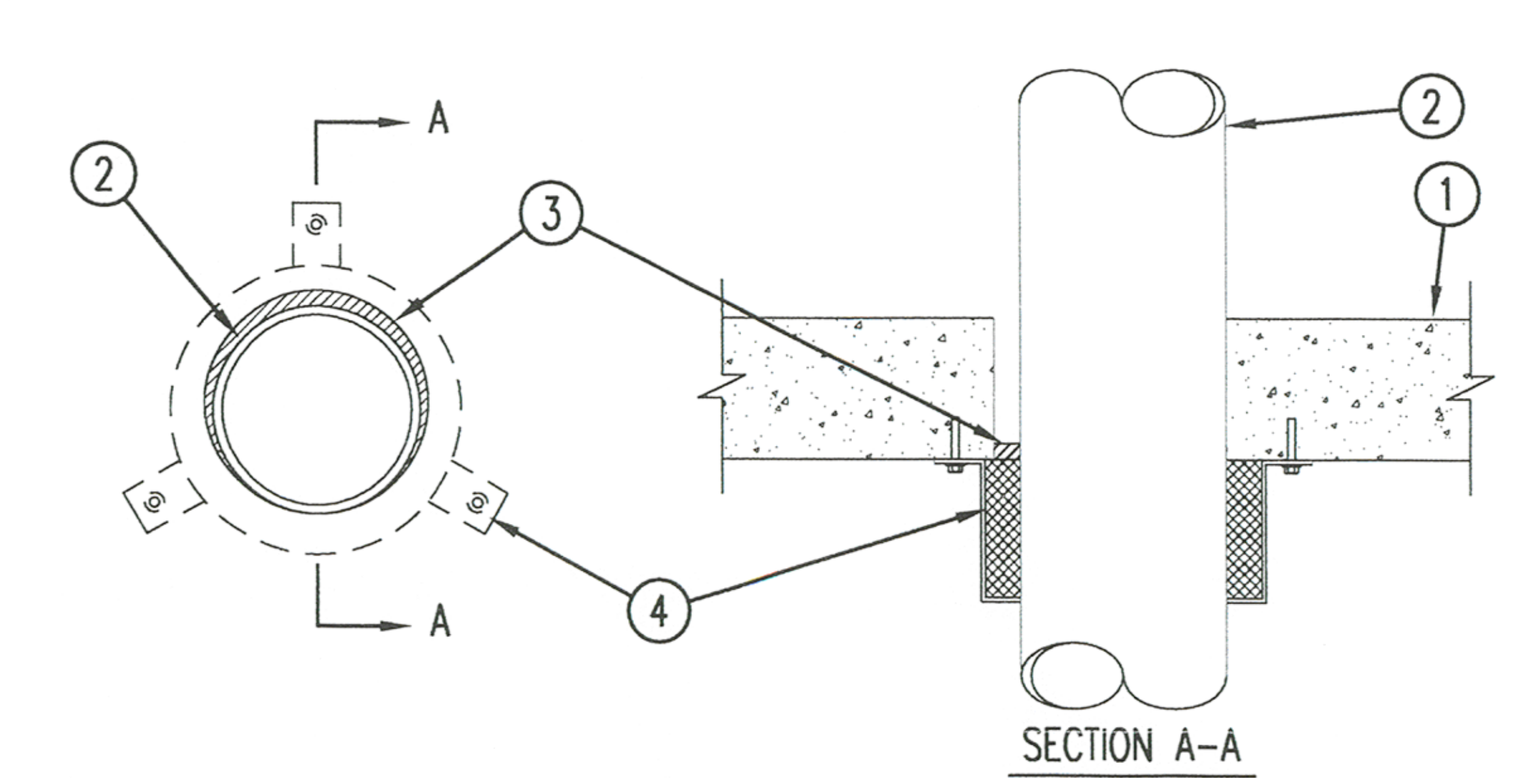

1. Floor or Wall Assembly – Min 4-1/2 in. thick reinforced lightweight or normal weight (100-150 pcf) concrete. Wall may also be constructed of any UL Classified Concrete Blocks*. Max diam of opening is 7 in.
   See Concrete Blocks (CAZT) category in the Fire Resistance Directory for names of manufacturers.
2. Through Penetrants – One nonmetallic pipe or tubing to be installed either concentrically or eccentrically within the firestop system. The annular space between pipe and periphery of opening shall be min 0 in. (point contact) to max 1/2 in. Pipe to be rigidly supported on both sides of floor or wall assembly. The T Ratings are dependent on the size and/or type of pipe as shown in the table below. The following types and sizes of nonmetallic pipes may be used:
   - A. Polyvinyl Chloride (PVC) Pipe – Nom 6 in. diam (or smaller) Schedule 40 solidcore of cellular core PVC pipe for use in closed (process or supply) or vented (drain, waste or vent) piping system.
   - B. Chlorinated Polyvinyl Chloride (CPVC) Pipe – Nom 6 in. diam (or smaller) SDR17 CPVC pipe for use in closed (process or supply) or vented (drain, waste or vent) piping systems.
   - C. Acrylonitrile Butadiene Styrene (ABS) Pipe – Nom 6 in. diam (or smaller) Schedule 40 solid-core or cellular core ABS pipe for use in closed (process or supply) or vented (drain, waste or vent) piping systems.
   - D. Flame Retardant Polypropylene (FRPP) Pipe – Nom 6 in. diam (or smaller) Schedule 40 FRPP pipe for use in closed (process or supply) or vented (drain, waste or vent) piping systems.

System No. C-AJ-2109
F RATING = 3-HR.
T RATING = 0, 2 & 3 HR. (See Item 2)

Pipe Type	Nom Pipe Diam, in.	T Rating, hr
PVC, CPVC		
ABS, FRPP	1-1/2, 2, 3	2
PVC, CPVC		
ABS, FRPP	4,	3
PVC, CPVC		
ABS+, FRPP	6,	3
ABS++	6,	0

+ – indicates solid core ABS only
++ – indicates cellular core ABS only

3. Fill, Void or Cavity Material* – Sealant – Min 1/2 in. thickness of fill material applied within the annulus, flush with bottom surface of floor or with both surfaces of wall.
   HILTI, Inc. – FS-ONE Sealant
4. Firestop Device* – Firestop Collar – Firestop collar shall be installed in accordance with the accompanying installation instructions. Collar to be installed and latched around the pipe and secured to underside of floor or both sides of wall using the anchor hooks provided with the collar. (Minimum 2 anchor hooks for 1-1/2 and 2 in. diam pipes, 3 anchor hooks for 3 and 4 in. diam pipes, and 6 anchor hooks for 6 in. diam pipes). The anchor hooks are to be secured with 1/4 in. diam by min 1-1/2 in. long steel expansion bolts, or equivalent, in conjunction with steel nuts and min 3/4 in. diam steel washers with one anchor bolt in each anchor hook.
   HILTI CONSTRUCTION CHEMICALS, DIV OF
   HILTI INC – CP 643 50/1.5", CP 643 63/2",CP 643 90/3", CP 643 110/4" or CP 642 160/6" Firestop Collar
   *Bearing the UL Classification Marking

PLANS APPROVED ARCHITECTURAL
DJW APR 2 1 2009

DETAIL (20)
1/8" = 1'-0"

PERMIT SET

CITY OF LAS VEGAS
PAVILION POOL COVER
101 SOUTH PAVILION CENTER DRIVE
LAS VEGAS, NEVADA 89144
FIRE REATED
ASSEMBLIES

SH ARCHITECTURE
7373 Peak Drive Suite 250 Las Vegas Nevada 89128
ph 702.363.2222 fax 702.363.6060 www.sh-architecture.com

STAMP: CURT JOHN CARLSON REGISTERED ARCHITECT No. 3443 STATE OF NEVADA
MAR 2 6 2009

OWNER: CITY OF LAS VEGAS
DEPARTMENT OF PUBLIC WORKS
ARCHITECTURAL SERVICES
400 EAST STEWART AVENUE
LAS VEGAS, NEVADA 89101
PHONE: (702) 229-6535
FAX: (702) 384-4846
TDD: (702) 386-9108

DRAWN	MAP/JW
FILE	G2.11
DATE	03-26-09
SCALE	1/8"=1'-0"
BID NO	07-15341.05
CLV DWG NO	107V3596-2
SHT NO	G3.10

REVISIONS
CONSULTANT

REVISED 8/27/03

DRAWINGS AS INSTRUMENTS OF SERVICE ARE THE PROPERTY OF THE DESIGN PROFESSIONAL WHOSE STAMP OF CERTIFICATION APPEARS ON THE DRAWINGS AND SPECIFICATIONS ANY USE OR REPRODUCTION IN WHOLE OR IN PART WITHOUT WRITTEN CONSENT IS STRICTLY PROHIBITED COPIES OF THE DRAWINGS AND SPECIFICATIONS RETAINED BY THE CLIENT MAY BE UTILIZED ONLY FOR OCCUPYING THE PROJECT FOR WHICH THEY WERE PREPARED AND NOT FOR THE CONSTRUCTION OF ANY OTHER PROJECT N A C 623.780

COVER SHEET for THE IMPROVEMENT PLANS of
CITY OF LAS VEGAS
PAVILION POOL ENCLOSURE

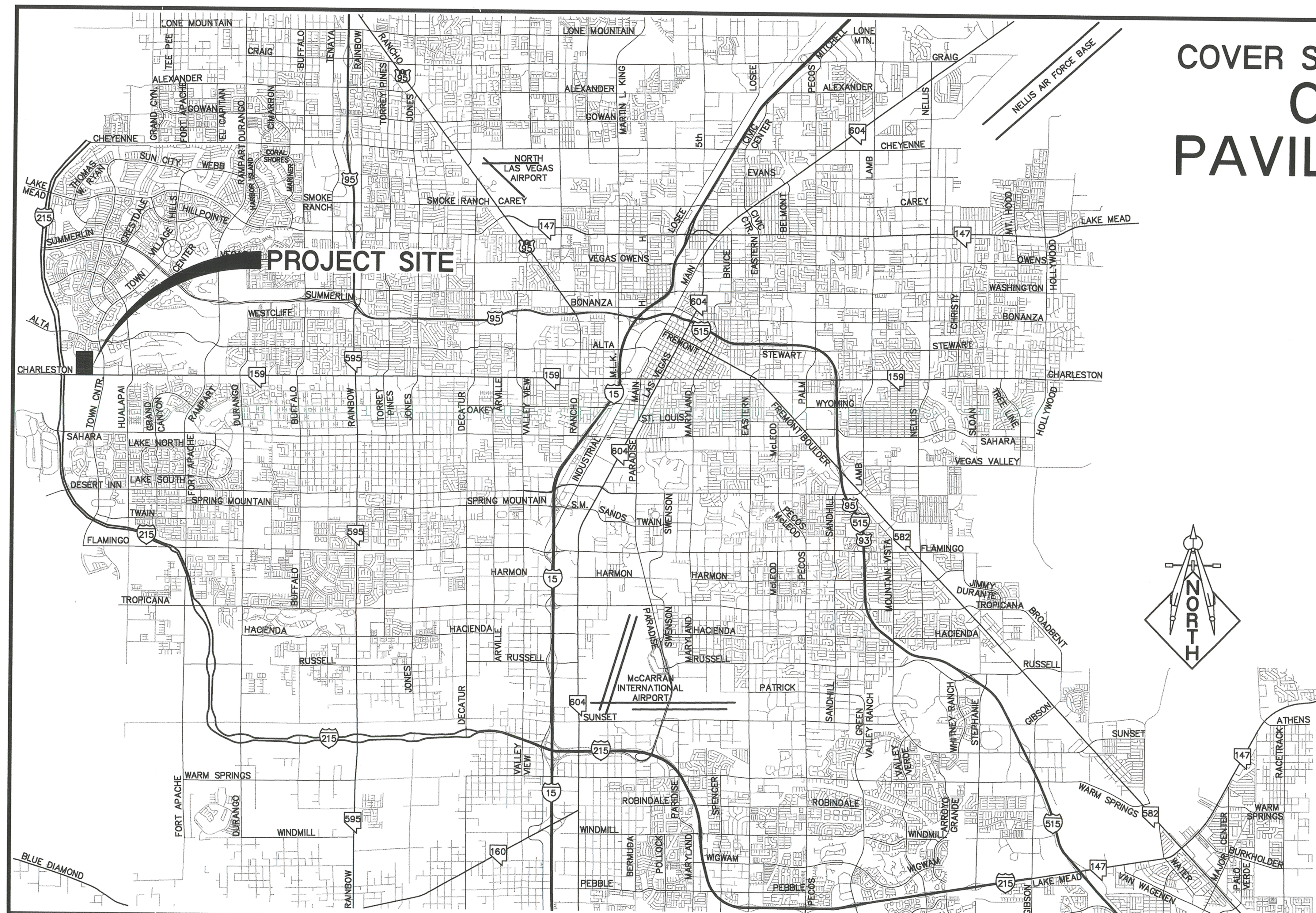

A PORTION OF THE NORTHEAST QUARTER (NE 1/4) OF THE NORTHEAST QUARTER (NE 1/4) OF THE NORTHEAST QUARTER (NE 1/4) OF SECTION 35, TOWNSHIP 20 SOUTH, RANGE 59 EAST, CLARK COUNTY, NEVADA
A.P.N.: 137-35-501-004

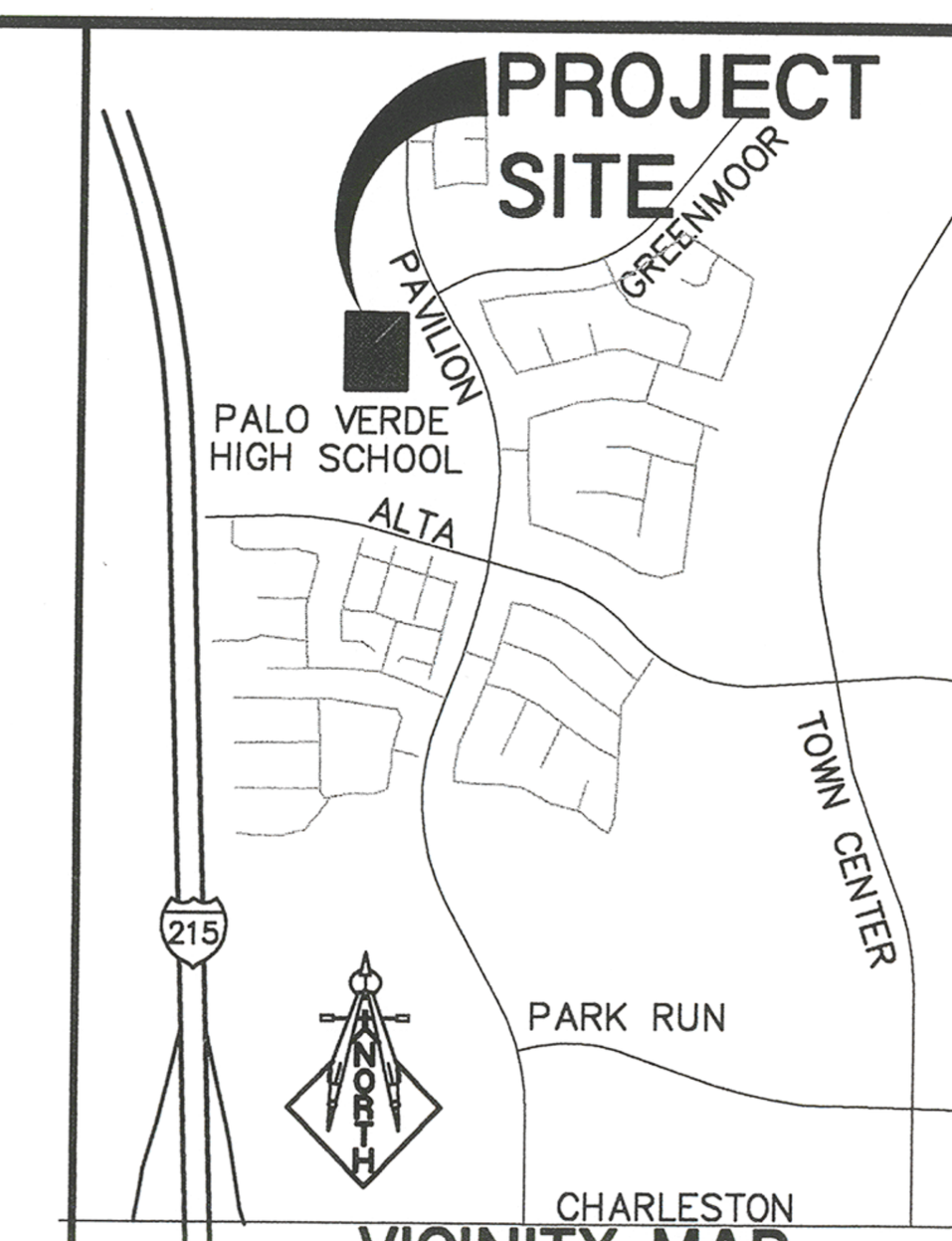

VICINITY MAP
NOT TO SCALE

ABBREVIATIONS

ABAN	ABANDON	INV	INVERT
AIP	ABANDON IN PLACE	ISL	ISLAND
AGG	AGGREGATE	JB	JUNCTION BOX
ALT	ALTERNATE	LOC	LENGTH OF CURB
A	ANODE, GAS	LT	LEFT
ACP	ASBESTOS CEMENT PIPE	LF	LINEAR FEET
ACP	ASPHALTIC CONCRETE	LVVWD	LAS VEGAS VALLEY WATER DISTRICT
AVE	AVENUE	MH	MANHOLE
BC	BACK OF CURB	MAX	MAXIMUM
BCR	BACK OF CURB RADIUS	MIN	MINIMUM
BVC	BEGINNING OF VERTICAL CURVE	MON	MONOLITHIC
BM	BENCHMARK	N/O	NORTH OF
BDRY LINE	BOUNDARY LINE	NTS	NOT TO SCALE
CATV	CABLE TELEVISION	OC	ON CENTER
C-C	CENTER TO CENTER	OG	OPEN-GRADED PAVEMENT, ORIGINAL GROUND
CL	CENTERLINE	PVMT	PAVEMENT
CBC	CITY OF BOULDER CITY	PI	POINT OF INTERSECITON
CLV	CITY OF LAS VEGAS	PRC	POINT OF REVERSE CURVE
COH	CITY OF HENDERSON	PC	POINT OF CURVE
CM	CITY OF MESQUITE	PT	POINT OF TANGENCY
CNLV	CITY OF NORTH LAS VEGAS	PCC	POINT OF COMPOUND CURVE
CC	CLARK COUNTY	PCC, CONC	PORTLAND CEMENT CONCRETE
CCSD	CLARK COUNTY SANITATION DISTRICT	PP	POWER POLE
CO	CLEAN OUT, SEWER	P	POWER
COMM	COMMERCIAL	PL	PROPERTY LINE
CONC, PCC	CONCRETE	PROP	PROPOSED
CONST	CONSTRUCTION OR CONSTRUCT	PB	PULL BOX
COR	CORNER	RP	RADIUS POINT
CMP	CORRUGATED METAL PIPE	R	RADIUS
CSAP	CORRUGATED STEEL ARCH PIPE	RR	RAILROAD
CSP	CORRUGATED STEEL PIPE	REINF	REINFORCED
C&G	CURB & GUTTER	RC	REINFORCED CONCRETE
CIP	CAST IRON PIPE	RCB	REINFORCED CONCRETE BOX
COL	COLUMN	RCP	REINFORCED CONCRETE PIPE
CU YD, CY	CUBIC YARD	RELOC	RELOCATE
CU FT, CF	CUBIC FOOT	RT	RIGHT
CULV	CULVERT	R/W	RIGHT-OF-WAY
CF	CURB FACE	RD	ROAD
DEPT	DEPARTMENT	SS	SANITARY SEWER
DIA	DIAMETER	SHT	SHEET
DWY	DRIVEWAY	S/O	SOUTH OF
DI	DROP INLET	SW	SIDEWALK
ESMT	EASEMENT	SQ FT, SF	SQUARE FOOT
E/O	EAST OF	SQ YD,SY	SQUARE YARD
EP	EDGE OF PAVEMENT	STA	STATION
EO	EDGE OF OIL	SHP	STEEL HIGHPRESSURE PIPE
E	ELECTRIC	SD	STORM DRAIN
EM	ELECTRIC METER	STD	STANDARD
ELEV	ELEVATION	STRUCT	STRUCTURAL OR STRUCTURE
EMBK	EMBANKMENT	SURV	SURVEY
ECR	END OF CURB RETURN	SLT	STREETLIGHT
EC	END OF CURVE	TL	TELEPHONE
EBS	CATHODE PROTECTION BOND STATION	TEMP	TEMPORARY
ETS	CATHODE PROTECTION TEST STATION	TBA	TO BE ADJUSTED
EVC	END OF VERTICAL CURVE	TBR	TO BE REMOVED
EXIST	EXISTING	TC	TOP OF CURB
FT	FEET/FOOT	TP	TOP OF PIPE
FG	FINISH GRADE	TS	TRAFFIC SIGNAL
FA	FIRE ALARM	TSI	TRAFFIC SIGNAL INTERCONNECT
FH	FIRE HYDRANT	TRANS	TRANSITION
FL	FLOW LINE	TYP	TYPICAL
GALV	GLAVANIZED	UG	UNDERGROUND
GM	GAS METER	VAR	VARIABLE
GR	GAS PRESSURE REGULATOR	VERT	VERTICAL
PL-G	PLASTIC GAS	VC	VERTICAL CURVE
SG	STEEL GAS	VG	VALLEY GUTTER
GB	GRADE BREAK	VCP	VITRIFIED CLAY PIPE
GUT	GUTTER	W	WATER
HDWL	HEADWALL	WM	WATER METER
IN	INCH	W/O	WEST OF
INT	INTERSECTION	YD	YARD

DEVELOPER

CITY OF LAS VEGAS
400 EAST STEWART AVENUE
LAS VEGAS, NV 89101
CONTACT: PATRICK BATTE
PHONE: (702) 229-6535
FAX: (702) 384-4846

OWNER

CITY OF LAS VEGAS
400 EAST STEWART AVENUE
LAS VEGAS, NV 89101
CONTACT: PATRICK BATTE
PHONE: (702) 229-6535
FAX: (702) 384-4846

UTILITY PROVIDERS

WATER: . . . . LAS VEGAS VALLEY WATER DISTRICT
SEWER: . . . . CITY OF LAS VEGAS
GAS: . . . . SOUTHWEST GAS CORPORATION
ELECTRIC: . . . . NV ENERGY
TELEPHONE: . . . . EMBARQ
CABLE TV: . . . . COX COMMUNICATIONS LAS VEGAS, INC.
TRASH: . . . . REPUBLIC SILVER STATE DISPOSAL SERVICE

APPROVALS

CHERI EDELMAN, P.E. #11514 ______ DATE
CITY ENGINEER

APPROVAL OF THESE PLANS IS LIMITED TO THOSE IMPROVEMENTS CONSTRUCTED IN THE DEDICATED RIGHT-OF-WAY AND/OR DEDICATED EASEMENTS. THIS APPROVAL DOES NOT AUTHORIZE THE CONSTRUCTION OF ANY IMPROVEMENTS THAT DEVIATE FROM ADOPTED STANDARDS AND/OR SPECIFICATIONS, EXCEPT THOSE SPECIFICALLY LISTED UNDER DEVIATIONS FROM STANDARD. THE ENGINEER SHALL RESOLVE ANY DEVIATION OTHER THAN THOSE LISTED IN DEVIATIONS FROM STANDARDS IN FAVOR OF THE UNIFORM STANDARDS DRAWINGS AND SPECIFICATIONS CLARK COUNTY AREA, NEVADA.

DOUG RANKIN, AICP, DIRECTOR OF PLANNING AND DEVELOPMENT ______ DATE

NOTE:
THIS PLAN MEETS THE APPLICABLE STANDARDS OF THE PLANNING AND DEVELOPMENT DEPARTMENT.

CITY FIRE MARSHAL ______ DATE

SUMMERLIN REVIEW APPORVAL ______ DATE

N/A (NO CONNECTIONS)
LAS VEGAS VALLEY WATER DISTRICT
PROJECT #______ SHEETS______ DATE

N/A
SOUTHWEST GAS CORPORATION ______ DATE

N/A
NV ENERGY ______ DATE

NV ENERGY ACKNOWLEDGES THAT WE HAVE RECEIVED YOUR PLANS AND WILL PROVIDE SERVICE TO ALL ELECTRICAL NEEDS ASSOCIATED WITH THIS PROJECT. NEVADA POWER COMPANY RESERVES THE RIGHT TO ADDRESS ANY EXISTING OR FUTURE CONFLICTS ONCE THE FINAL DESIGN IS COMPLETED. THE NEW SERVICE AND THE RESOLUTION OF ANY CONFLICTS WILL BE ACCOMPLISHED PURSUANT TO THE NEVADA PUBLIC UTILITY COMMISSION'S RULES AND REGULATIONS.

N/A
COX COMMUNICATIONS LAS VEGAS, INC. ______ DATE

N/A
EMBARQ ______ DATE

THE AFFIXED EMBARQ NEVADA APPROVAL DOES NOT ASSUME OR GUARANTEE LIABILITY FOR KNOWN OR UNKNOWN CONFLICTS WITH EXISTING OR PROPOSED IMPROVEMENTS. RESOLUTION OF ANY CONFLICT WILL BE ACCOMPLISHED PURSUANT TO LOCAL ORDINANCES, NEVADA REVISED STATUTES AND/OR PUBLIC UTILITY COMMISSION RULES AND REGULATIONS.

SHEET INDEX

1. COVER SHEET C1.01
2. GENERAL NOTES C1.02
3. DEMOLITION PLAN C2.01
4. GRADING PLAN C3.01

GENERAL SITE INFORMATION

A.P.N.:
137-35-501-004

BASIS OF BEARINGS:
BASIS OF BEARINGS IS THE CENTER LINE OF PAVILION CENTER DRIVE FROM THE INTERSECTION WITH GREENMOOR LANE SOUTH TO THE PC OF PAVILION CENTER DRIVE, AS SHOWN BY THAT MAP ON FILE IN BOOK 75 OF PLATS, PAGE 75 IN THE CLARK COUNTY RECORDER'S OFFICE, CLARK COUNTY, NEVADA.

SAID LINE BEARS SOUTH 29°24'00" EAST.

BENCHMARK:
CITY OF LAS VEGAS BENCH MARK – OLV09 36NWS BEING A RIVET & PLATE IN THE TOP OF CURB AT THE NORTHWEST CORNER OF PAVILION CENTER AND GREENMOOR.

ELEVATION: 3044.40 FEET / 927.93501 METERS
(NAVD '88 DATUM)

SAFETY ALERT
Call Before You Overhead
1-702-227-2929 FREEWAY AND ARTERIAL SYSTEM OF OPERATIONS
Call before you UnderGround 1-702-432-5300
AVOID CUTTING UNDERGROUND UTILITY LINES. IT'S COSTLY.
811 Know what's below. Call before you dig.
UNDERGROUND SERVICE ALERT (USA)

LEGEND

CL OR SURVEY LINE	PROPERTY LINE	ROW LINE	EASEMENT LINE	SAWCUT LINE

DESCRIPTION:	CONTOUR LINES	EDGE OF PAVEMENT	"A" TYPE CURBS	"L" TYPE CURBS	WALLS	FENCES	AC PAVEMENT	CONCRETE	SPOT ELEVATIONS	SIGNS	MANHOLE W/ DESCRIPTION	FIRE HYDRANTS	GATE VALVES	REDUCERS	CLEAN OUTS	UTILITY BOX OR VAULT	BACKWATER VALVES	100w HPS STREETLIGHTS	150w HPS STREETLIGHTS	200w HPS STREETLIGHTS	250w HPS STREETLIGHTS
EXISTING:	(2210)								(12.34) BC		S						BWV				
PROPOSED:	2122								12.34 BC		S						BWV				

SCARP LINE

MANHOLE DESCRIPTIONS
S = SANITARY SEWER
D = STORM DRAIN
E = ELECTRICAL
T = TELEPHONE

DRAWN BY:	DATE:
R.A.	03-26-09
DESIGNED BY:	DATE:
R.A.	03-26-09
CHECKED BY:	DATE:
G.M.M.	03-26-09
PROJECT No.: 071181	SCALE: N/A

SHEET: COVER SHEET
TITLE: CITY OF LAS VEGAS PAVILION POOL ENCLOSURE

SEAL: PROFESSIONAL ENGINEER – STATE OF NEVADA – GUY M. MORRIS – Exp. 12-31-09 – CIVIL – No. 14526
03-26-09

SHEET No. C1.01
SHEET 1 OF 4
DRAWING No.

LOCHSA ENGINEERING
6345 SOUTH JONES BOULEVARD SUITE 100
LAS VEGAS, NV 89118
PHONE: (702) 365-9312, FAX: (702) 365-9317

REV.:	DATE:	BY:	DESCRIPTION:

CITY OF LAS VEGAS STREETLIGHT NOTES

1. ALL STREET LIGHTING INSTALLATIONS SHALL BE IN ACCORDANCE WITH THE STREET LIGHTING PLANS, THE "UNIFORM STANDARD SPECIFICATIONS FOR PUBLIC WORKS CONSTRUCTION OFF-SITE IMPROVEMENTS, CLARK COUNTY AREA, NEVADA", LATEST REVISION, AND THE "UNIFORM STANDARD DRAWINGS FOR PUBLIC WORKS CONSTRUCTION OFF-SITE IMPROVEMENTS, CLARK COUNTY AREA, NEVADA", LATEST REVISION.
2. NO DEVIATION OF STREET LIGHT, PULL BOX, CONDUITS (ETC.) LOCATIONS SHALL BE PERMITTED WITHOUT WRITTEN APPROVAL OF THE TRAFFIC/ELECTRICAL FIELD OPERATIONS DIVISION AND THE CITY ENGINEER. ANY DEVIATION FROM THE PLAN LOCATION WILL REQUIRE COMPLIANCE WITH SECTION 623.1.0.03 (E) OF THE SPECIFICATIONS.
3. ALL EXISTING STREET LIGHTING SHALL REMAIN OPERATIONAL DURING CONSTRUCTION.
4. ALL EMPTY CONDUIT SHALL HAVE PULL STRINGS INSTALLED PRIOR TO FINAL INSPECTION.
5. ANY STRUCTURE SUCH AS BLOCK WALLS, CHAIN LINK FENCES, RETAINING WALLS, ETC., SHALL LEAVE A MINIMUM CLEARANCE OF EIGHTEEN INCHES (18") TO THE FACE OF STREET LIGHTING POLE ON ALL SIDES WHEN STREETLIGHT IS INSTALLED BEHIND SIDEWALK, AND SHALL AT NO TIME COMPLETELY ENCLOSE THE STREET LIGHTING POLE.
6. AS-BUILT DRAWINGS SHALL BE SUPPLIED TO THE ELECTRICAL SERVICES SECTION PRIOR TO ANY PRE-FINAL INSPECTION. THE AS-BUILT DRAWING NEEDS TO BE STAMPED AS-BUILT AND SIGNED BY THE PREPARER.
7. SERVICE POINT SHALL BE COORDINATED WITH NEVADA POWER COMPANY, AND WHEREVER POSSIBLE, BE LOCATED NEAR THE CENTER OF THE CIRCUIT. SERVICE POINTS SHALL BE SHOWN ON THE PLANS.
8. IT SHALL BE ASSUMED THAT IN THE ABSENCE OF AN EXISTING, WORKABLE CIRCUIT TO ATTACH TO, ALL INSTALLATIONS SHALL REQUIRE A NEW SERVICE FOR OPERATION OF THE CIRCUIT.
9. WHEREVER THERE IS AN OVERHEAD UTILITY THAT MAY CONFLICT WITH THE INSTALLATION OF STREET LIGHTING CIRCUITS AND/OR POLES, THESE CONFLICTS MUST BE RESOLVED BETWEEN THE DEVELOPER AND THE UTILITIES INVOLVED BEFORE STREETLIGHT BASES ARE INSTALLED AT NO EXPENSE TO THE CITY OF LAS VEGAS.
10. THE CONTRACTOR SHALL FURNISH COMPLETE SERVICE TO TRANSFORMERS AND CONTROL SYSTEMS IF REQUIRED ON PLANS.

CITY OF LAS VEGAS GRADING NOTES

1. IN THE EVENT THAT ANY UNFORESEEN CONDITIONS NOT COVERED BY THESE NOTES ARE ENCOUNTERED DURING GRADING OPERATIONS, THE OWNER/ENGINEER SHALL BE IMMEDIATELY NOTIFIED FOR DIRECTION.
2. IT SHALL BE THE RESPONSIBILITY OF THE CONTRACTOR TO PERFORM ALL NECESSARY CUTS AND FILLS WITHIN THE LIMITS OF THIS PROJECT AND THE RELATED OFF-SITE WORK, SO AS TO GENERATE THE DESIRED SUBGRADE, FINISH GRADES AND SLOPES SHOWN.
3. CONTRACTOR SHALL TAKE FULL RESPONSIBILITY FOR ALL EXCAVATION. ADEQUATE SHORING SHALL BE DESIGNED AND PROVIDED BY THE CONTRACTOR TO PREVENT UNDERMINING OF ANY ADJACENT FEATURES OR FACILITIES AND/OR CAVING OF THE EXCAVATION.
4. THE CONTRACTOR IS WARNED THAT AN EARTHWORK BALANCE WAS NOT NECESSARILY THE INTENT OF THIS PROJECT. ANY ADDITIONAL MATERIAL REQUIRED OR LEFTOVER MATERIAL FOLLOWING EARTHWORK OPERATIONS BECOMES THE RESPONSIBILITY OF THE CONTRACTOR.
5. THE GRADING CONTRACTOR IS RESPONSIBLE TO COORDINATE WITH THE OWNER TO PROVIDE FOR THE REQUIREMENTS OF THE PROJECT STORM WATER POLLUTION PREVENTION PLAN (SWPPP) AND ASSOCIATED PERMIT.
6. CONTRACTOR SHALL GRADE TO THE LINES AND ELEVATIONS SHOWN ON THE PLANS WITHIN THE FOLLOWING HORIZONTAL AND VERTICAL TOLERANCES AND DEGREES OF COMPACTION, IN THE AREAS INDICATED:

	HORIZONTAL	VERTICAL	COMPACTION
A. PAVEMENT AREA SUBGRADE	0.1'+ +0.0' TO	−0.1'	SEE SOILS REPORT
B. ENGINEERED FILL	0.5'+ +0.1' TO	−0.1'	SEE SOILS REPORT

COMPACTION TESTING WILL BE PERFORMED BY THE OWNER OR HIS REPRESENTATIVE.

7. ALL CUT AND FILL SLOPES SHALL BE PROTECTED UNTIL EFFECTIVE EROSION CONTROL HAS BEEN ESTABLISHED.
8. THE USE OF POTABLE WATER WITHOUT A SPECIAL PERMIT FOR BUILDING OR CONSTRUCTION PURPOSES INCLUDING CONSOLIDATION OF BACKFILL OR DUST CONTROL IS PROHIBITED. THE CONTRACTOR SHALL OBTAIN ALL NECESSARY PERMITS FOR CONSTRUCTION WATER.
9. THE CONTRACTOR SHALL MAINTAIN THE STREETS, SIDEWALKS AND ALL OTHER PUBLIC RIGHT-OF-WAY IN A CLEAN, SAFE AND USABLE CONDITION. ALL SPILLS OF SOIL, ROCK OR CONSTRUCTION DEBRIS SHALL BE PROMPTLY REMOVED FROM THE PUBLICLY OWNED PROPERTY DURING CONSTRUCTION AND UPON COMPLETION OF THE PROJECT. ALL ADJACENT PROPERTY, PRIVATE OR PUBLIC SHALL BE MAINTAINED IN A CLEAN, SAFE AND USABLE CONDITION.
10. IN THE EVENT THAT ANY TEMPORARY CONSTRUCTION ITEM IS REQUIRED THAT IS NOT SHOWN ON THESE DRAWINGS, THE OWNER AGREES TO PROVIDE AND INSTALL SUCH ITEM AT HIS OWN EXPENSE AND AT THE DIRECTION OF THE CITY ENGINEER. TEMPORARY CONSTRUCTION INCLUDES DITCHES, BERMS, ROAD SIGNS AND BARRICADES, ETC.

CITY OF LAS VEGAS SEWER NOTES

1. ALL CONSTRUCTION AND MATERIALS SHALL BE IN ACCORDANCE WITH THE LATEST EDITION OF THE "DESIGN & CONSTRUCTION STANDARDS FOR WASTEWATER COLLECTION SYSTEMS" AND THE "UNIFORM STANDARD SPECIFICATIONS FOR PUBLIC WORKS CONSTRUCTION OFF-SITE IMPROVEMENTS, CLARK COUNTY AREA, NEVADA", AS AMENDED. IT WILL BE THE RESPONSIBILITY OF THE CONTRACTOR TO BE AWARE OF THE CONTENTS OF THE ABOVE SPECIFICATIONS.
2. IT SHALL BE THE CONTRACTOR'S RESPONSIBILITY TO PERFORM CONSTRUCTION AS PER PLANS. ANY ADDITIONS, DELETIONS, OR CHANGES SHALL FIRST MEET WITH THE APPROVAL OF THE CITY ENGINEER.
3. CHISEL "S" OR "G" IN CURBS WHERE SEWER OR GAS LATERALS PASS UNDER THE CURB.
4. POLYVINYL (PVC) SEWER PIPE SHALL MEET ASTM D-3034 SDR 35 SPECIFICATIONS, INSTALLED WITH SAND BEDDING AND BACK FILL OF TYPE II AGGREGATE BASE.
5. ALL MANHOLES IN PAVED STREETS EIGHTY (80') ROW AND LARGER, SHALL HAVE CONCRETE COLLARS. STREETS LESS THAN EIGHTY (80') FOOT ROW WILL REQUIRE RETROFIT IF PAVING DOES NOT CONFORM TO CITY STANDARDS AT THE MANHOLE.
6. TEE SADDLES SHALL BE USED TO CONNECT SEWER LATERALS TO EXISTING MAIN LINES UP TO TWELVE INCH (12") DIAMETER. CONNECTIONS TO FIFTEEN INCH (15") OR LARGER MAINS SHALL REQUIRE SPECIAL PROCEDURES. IN LINE "Y" 'S SHALL BE USED ON LINES TWELVE INCHES (12") OR ABOVE.
7. WATER MAINS SHALL BE PROTECTED IN ACCORDANCE WITH LVVWD STANDARDS WHENEVER A SEWER MAIN CROSSES OVER A WATER MAIN OR THE SEWER IS LESS THAN EIGHTEEN INCH (18") UNDER A WATER MAIN.
8. ALL CONTRACTORS INSTALLING SEWER MAINS THAT WILL BE UNDER THE JURISDICTION OF THE CITY OF LAS VEGAS MUST BE STATE OF NEVADA CLASS "A" CONTRACTORS.
9. THE CITY OF LAS VEGAS WILL NOT ACCEPT ANY SEWER MAINS WHICH HAVE A VERTICAL DEFLECTION OF MORE THAN ONE TENTH (0.1) OF A FOOT FROM THE APPROVED CONSTRUCTION PLANS AT ANY LOCATION. SEWER MAINS FOUND TO EXCEED THIS TOLERANCE WILL HAVE TO BE REPAIRED OR REMOVED OR REPLACED TO THE SATISFACTION OF THE CITY ENGINEER PRIOR TO ACCEPTANCE BY THE CITY OF LAS VEGAS.
10. INSTALLATION OF CURVED SEWER REQUIRES THE USE OF C900 PIPE WHICH ALLOWS FOR PIPE DEFLECTION AT THE JOINTS.

CITY OF LAS VEGAS FIRE DEPARTMENT NOTES

1. ALL WORK SHALL BE DONE IN STRICT ACCORDANCE WITH THE CITY OF LAS VEGAS FIRE DEPARTMENT'S ORDINANCE # 5667, "HYDRANT SPECIFICATIONS", AND "HYDRANT INSTALLATION SPECIFICATION".
2. AUTHORIZED FIRE HYDRANTS FOR THIS PROJECT ARE:
   A. KENNEDY – GUARDIAN MODELS K81A AND K81D
   B. MUELLER – SUPER CENTURION 250 MODEL A-423
   C. CLOW – MEDALLION MODEL F-2546LVD
   D. TROY VALVE – PATRIOT MODEL PTB100N NEVADA HYDRANT
   E. U.S. PIPE – METROFLOW/M-03
3. ON ANY RESIDENTIAL OR COMMERCIAL INSTALLATIONS FIRE HYDRANTS SHALL BE INSTALLED AND FIRE APPARATUS ACCESS ROADS SHALL BE MAINTAINED BEFORE COMMENCEMENT OF ANY COMBUSTIBLE CONSTRUCTION. ALL FIRE HYDRANTS SHALL BE IN GOOD WORKING ORDER AND SHALL BE CAPABLE OF DELIVERING THE REQUIRED FIRE FLOW.
4. TO IDENTIFY THE FIRE HYDRANT LOCATIONS, CONTRACTOR SHALL PLACE A BLUE REFLECTIVE MARKER AT THE CENTER LINE OF STREET ADJACENT TO THE FIRE HYDRANTS AS REQUIRED BY ORDINANCE # 5667.
5. ALL UNDERGROUND INSPECTIONS, PRESSURE AND FLUSH VERIFICATIONS OF ALL FIRE HYDRANTS AND FIRE LINES, SHALL BE CONDUCTED BEFORE COVERING THE LINES. CALL THE CITY OF LAS VEGAS INSPECTION HOT-LINE AT 229-2071 TO REQUEST AN INSPECTION BY THE CITY OF LAS VEGAS FIRE DEPARTMENT.
6. PAINTING OF THE CURBS AND FIRE HYDRANTS AND ALL OTHER WORK NECESSARY AS REQUIRED BY ORDINANCE # 5667, FOR THE PROTECTION OF FIRE HYDRANTS FROM PHYSICAL DAMAGE, SHALL BE COMPLETED BEFORE APPROVAL BY THE CITY OF LAS VEGAS FIRE DEPARTMENT.
7. A PERMIT IS REQUIRED FROM THE CITY OF LAS VEGAS FIRE DEPARTMENT FOR THE ON-SITE WATER LINES AND FIRE HYDRANTS. THE PERMIT AND CONTRACTOR'S MATERIAL AND TEST CERTIFICATE FOR UNDERGROUND PIPING FORM SHALL BE OBTAINED FROM THE FIRE PROTECTION ENGINEER BEFORE COMMENCEMENT OF WORK.
8. PRIVATE FIRE HYDRANTS SHALL BE PAINTED RED.
9. PRIOR TO THE FINAL OCCUPANCY, A FLOW TEST MUST BE WITNESSED BY THE CITY OF LAS VEGAS FIRE DEPARTMENT TO VERIFY AVAILABILITY OF THE REQUIRED FIRE FLOW.
10. ALL ON-SITE UNDERGROUND WATER MAINS AND MATERIALS SHALL BE U.L. LISTED, A.W.W.A. APPROVED, AND SHALL BE RATED FOR THE APPROPRIATE WORKING PRESSURE.
11. FIRE HYDRANTS SPACING SHALL BE:
    RESIDENTIAL – 500 FEET UNSPRINKLERED; 600 FEET SPRINKLERED.
    COMMERCIAL – 300 FEET UNSPRINKLERED; 400 FEET SPRINKLERED.
12. WHERE NEW WATER MAINS ARE EXTENDED ALONG STREETS OR NEW STREETS ARE INSTALLED WHERE FIRE HYDRANTS ARE NOT NEEDED FOR PROTECTION OF THE STRUCTURES, FIRE HYDRANTS SHALL BE INSTALLED AT MAXIMUM 1,000 FOOT SPACING, TO PROVIDE FOR TRANSPORTATION HAZARDS. WHERE STREETS ARE PROVIDED WITH MEDIAN DIVIDERS OR HAVE FOUR OR MORE TRAFFIC LANES AND HAVE A TRAFFIC COUNT OF MORE THAN 30,000 PER DAY, HYDRANTS ARE REQUIRED ON EACH SIDE OF THE STREET SPACED AT 500 FEET ON AN ALTERNATING BASIS.
13. NO FIRE HYDRANTS SHALL BE LOCATED WITHIN THE REQUIRED RADIUS OF A CUL-DE-SAC OR WITHIN 20 FEET OF THE PERIMETER OF THE RADIUS OF THE CUL-DE-SAC.
14. NO FIRE HYDRANTS SHALL BE LOCATED WITHIN 6 FEET OF ANY CURB RETURN, DRIVEWAY, POWER POLE, STREETLIGHT OR ANY OTHER OBSTRUCTION.
15. THE MAXIMUM DISTANCE FROM A FIRE HYDRANT TO A ONE-TWO FAMILY DWELLING SHALL NOT EXCEED 300 FEET, AS MEASURED BY AN APPROVED ROUTE.
16. THE MAXIMUM DISTANCE FROM A FIRE HYDRANT TO A FIRE DEPARTMENT CONNECTION (FDC) SHALL NOT EXCEED 100 FEET, AS MEASURED BY AN APPROVED ROUTE.
17. THE MAXIMUM DISTANCE FROM A FIRE HYDRANT TO THE END OF A DEAD-END STREET SHALL NOT EXCEED 200 FEET.
18. TWO SOURCES OF SUPPLY ARE REQUIRED WHENEVER THERE ARE 4 OR MORE FIRE HYDRANTS/SPRINKLER LEAD-INS ARE INSTALLED ON A SINGLE SYSTEM. SECTIONAL CONTROL VALVES SHALL BE INSTALLED SO THAT NO MORE THAN 2 FIRE HYDRANTS CAN BE OUT OF SERVICE DUE TO A BREAK IN A WATER MAIN.
19. ALL FIRE APPARATUS ACCESS ROADS SHALL BE PAVED TO PROVIDE ALL-WEATHER DRIVING CAPABILITIES, AND SHALL BE DESIGNED AND MAINTAINED TO SUPPORT THE IMPOSED LOADS OF THE FIRE APPARATUS.
20. THE GRADIENT FOR THE FIRE APPARATUS ACCESS ROADS SHALL NOT EXCEED 12% ANGLES OF APPROACH AND ANGLES OF DEPARTURE SHALL NOT EXCEED 6% FOR 25 FEET PRIOR TO OR AFTER THE GRADE CHANGE. ADJACENT TO THE STRUCTURES GRADIENT SHALL NOT EXCEED 6%.
21. THE TURNING RADIUS OF THE FIRE APPARATUS ACCESS ROADS SHALL BE NO LESS THAN 52 FEET OUTSIDE AND 28 FEET INSIDE TURNING RADIUS.
22. VERTICAL CLEARANCE OF ALL FIRE APPARATUS ACCESS ROADS SHALL BE NOT LESS THAN 13 FEET 6 INCHES.
23. FIRE DEPARTMENT ACCESS ROADS IN ALL RESIDENTIAL DEVELOPMENTS (EXCEPT FOR THE APARTMENT BUILDINGS) SHALL HAVE A MINIMUM UNOBSTRUCTED WIDTH OF NOT LESS THAN 36 FEET FLOW LINE TO THE FLOW LINE (THIS WIDTH MAY BE REDUCED TO 24 FEET, IF ALL BUILDINGS FRONTING THE STREET ARE SPRINKLERED) FOR MAIN RESIDENTIAL STREETS, WITH PARKING PERMITTED ON BOTH SIDES OF THE STREET. PRIVATE DRIVE AISLES, DRIVEWAYS, ETC. SHALL BE ALLOWED TO BE REDUCED TO A MINIMUM WIDTH OF 24 FEET WIDE FLOW LINE TO THE FLOW LINE WHEN SERVING NO MORE THAN 6 RESIDENCES, AND WHEN ON STREET PARKING IS DISALLOWED.
24. ALL FIRE APPARATUS ACCESS ROADS IN COMMERCIAL DEVELOPMENTS AND APARTMENT COMPLEXES SHALL HAVE A MINIMUM UNOBSTRUCTED WIDTH OF NOT LESS THAN 24 FEET (FLOW LINE TO THE FLOW LINE), PROVIDED NO PARKING IS ALLOWED ON EITHER SIDE; 32 FEET (FLOW LINE TO THE FLOW LINE), IF PARALLEL PARKING IS ALLOWED ON ONE SIDE ONLY; AND 40 FEET (FLOW LINE TO THE FLOW LINE), IF PARALLEL PARKING IS ALLOWED ON BOTH SIDES. THESE WIDTHS MAY BE REDUCED BY 4 FEET IF ALL BUILDINGS ARE SPRINKLERED.
25. A FIRE DEPARTMENT ACCESS ROAD SHALL EXTEND TO WITHIN 50 FEET OF A SINGLE EXTERIOR DOOR PROVIDING ACCESS TO THE INTERIOR OF THE BUILDING.
26. A FIRE APPARATUS ACCESS ROAD SHALL BE REQUIRED WHEN ANY PORTION OF AN EXTERIOR WALL OF THE FIRST STORY IS LOCATED MORE THAN 150 FEET FROM A FIRE DEPARTMENT VEHICLE ACCESS. THIS DISTANCE COULD BE INCREASE TO 250 FEET IF THE BUILDING IS SPRINKLERED.
27. APPROVED SECONDARY FIRE APPARATUS ACCESS SHALL BE PROVIDED FOR 100 OR MORE DWELLING UNITS, ROAD(S) WITH DEAD-ENDS OR WITH A SINGLE POINT OF ACCESS IN EXCESS OF 600 FEET, AND FOR ALL COMMERCIAL, INDUSTRIAL, AND MULTI-FAMILY RESIDENTIAL DEVELOPMENTS.
28. ALL DEAD-END FIRE APPARATUS ACCESS ROADS AND OR FIRE LANES, PUBLIC OR PRIVATE, IN EXCESS OF 150 FEET IN LENGTH SHALL BE PROVIDED WITH AN APPROVED TURN AROUND AREA HAVING A MINIMUM DIAMETER OF 81 FEET.
29. ALL FIRE APPARATUS ACCESS ROADS SHALL BE MARKED BY PLACING APPROVED SIGNS AT THE START OF THE DESIGNATED FIRE LANE, ONE SIGN AT THE END OF THE FIRE LANE AND WITH SIGNS AT INTERVALS 100 FEET ALONG ALL DESIGNATED FIRE LANES. SIGNS TO BE PLACED ON BOTH SIDES OF AN ACCESS ROADWAY IF NEEDED TO PREVENT PARKING ON EITHER SIDE. SIGNS TO BE INSTALLED NO HIGHER THAN 10 FEET OR LESS THAN 6 FEET FROM ROADWAY LEVEL. THE CURB ALONG OR ON THE PAVEMENT OR CEMENT IF A CURB IS NOT PROVIDED SHALL BE PAINTED WITH A RED WEATHER RESISTANT PAINT IN ADDITION TO THE SIGNS.
30. ELECTRICALLY CONTROLLED ACCESS GATES SHALL BE PROVIDED WITH AN APPROVED EMERGENCY VEHICLE DETECTOR/RECEIVER SYSTEM. SAID SYSTEM SHALL BE INSTALLED IN ACCORDANCE WITH THE CITY OF LAS VEGAS GUIDELINES FOR AUTOMATIC EMERGENCY VEHICLE ACCESS GATES.

REVISED 2/4/04

CITY OF LAS VEGAS GENERAL NOTES

1. ALL CONSTRUCTION AND MATERIALS SHALL BE IN ACCORDANCE WITH THE "UNIFORM STANDARD SPECIFICATIONS FOR PUBLIC WORKS CONSTRUCTION OFF-SITE IMPROVEMENTS, CLARK COUNTY AREA NEVADA", LATEST ISSUE; THE "UNIFORM STANDARD DRAWINGS FOR PUBLIC WORKS CONSTRUCTION, CLARK COUNTY AREA NEVADA", LATEST REVISED EDITION; THE "SUMMERLIN IMPROVEMENT STANDARDS" FOR WORK IN THE SUMMERLIN AREA; AND OTHER APPLICABLE APPROVED STANDARDS ISSUED BY THE CONTROLLING AGENCY; THE UNIFORM BUILDING CODE; AND ALL LOCAL CITY CODES AND ORDINANCES APPLICABLE, EXCEPT AS NOTED ON THIS SHEET AS "DEVIATIONS FROM STANDARDS".
2. THE EXISTENCE AND LOCATION OF ANY OVERHEAD OR UNDERGROUND UTILITY LINES, PIPES, OR STRUCTURES SHOWN ON THESE PLANS ARE OBTAINED BY A RESEARCH OF THE AVAILABLE RECORDS. EXISTING UTILITIES AS SHOWN FROM CLV PLANS LIBRARY ARE APPROXIMATE AND FOR RECORD PURPOSES. EXISTING UTILITIES ARE LOCATED ON PLANS ONLY FOR THE CONVENIENCE OF THE CONTRACTOR. EXISTING UTILITY SERVICE LATERALS MAY NOT BE SHOWN ON THE PLANS. THE CONTRACTOR SHALL, AT HIS OWN EXPENSE, LOCATE ALL UNDERGROUND AND OVERHEAD INTERFERENCE'S WHICH MAY AFFECT HIS OPERATION DURING CONSTRUCTION AND SHALL TAKE ALL NECESSARY PRECAUTIONS TO AVOID DAMAGE TO SAME. THE CONTRACTOR SHALL USE EXTREME CAUTION WHEN WORKING NEAR OVERHEAD UTILITIES SO AS TO SAFELY PROTECT ALL PERSONNEL AND EQUIPMENT, AND SHALL BE RESPONSIBLE FOR ALL COST AND LIABILITY IN CONNECTION THEREWITH.
3. THE CONTRACTOR SHALL TAKE ALL PRECAUTIONARY MEASURES NECESSARY TO PROTECT EXISTING UTILITY LINES, STRUCTURES AND STREET IMPROVEMENTS WHICH ARE TO REMAIN IN PLACE, FROM DAMAGE, AND ALL SUCH IMPROVEMENTS OR STRUCTURES DAMAGED BY THE CONTRACTOR'S OPERATIONS SHALL BE REPAIRED OR REPLACED SATISFACTORY TO THE CITY ENGINEER AND OWNING UTILITY COMPANY AT THE EXPENSE OF THE CONTRACTOR.
4. ALL CONSTRUCTION SHALL BE AS SHOWN ON THESE PLANS, ANY REVISIONS SHALL HAVE THE PRIOR WRITTEN APPROVAL OF THE CITY ENGINEER.
5. TYPE V CEMENT SHALL BE USED IN ALL OFF-SITE CONCRETE WORK. CONCRETE TO BE 3000 P.S.I. MINIMUM @ 28 DAYS. MIX DESIGNS TO BE APPROVED BY THE CITY, PRIOR TO THE USE ON THE PROJECT.
6. PERMITS ARE REQUIRED FOR ANY WORK IN THE PUBLIC RIGHT-OF-WAY. THE CONTRACTOR SHALL SECURE ALL PERMITS AND INSPECTIONS REQUIRED FOR THIS CONSTRUCTION.
7. EXPANSION JOINTS REQUIRED, MAXIMUM EVERY 300' IN EXTRUDED-TYPE CURB.
8. AC PAVEMENT TO BE ONE-HALF INCH (½") ABOVE LIP OF ALL GUTTERS AFTER 12-27-07 COMPACTION, EXCEPT AT SIDEWALK RAMPS AND CROSS GUTTERS.
9. CURB AND GUTTER FOUND TO BE UNACCEPTABLE TO THE CITY OF LAS VEGAS SHALL BE REMOVED AND REPLACED PER STANDARD DRAWING 216.
10. SIDEWALK RAMPS SHALL BE CONSTRUCTED IN EACH QUADRANT OF AN INTERSECTION PER STANDARD DRAWING 235. EXACT LOCATION OF RAMPS MAY BE ADJUSTED IN THE FIELD BY A CITY INSPECTOR.
11. CONTRACTOR SHALL PROVIDE ALL NECESSARY HORIZONTAL AND VERTICAL TRANSITIONS BETWEEN NEW CONSTRUCTION AND EXISTING SURFACES TO PROVIDE FOR PROPER DRAINAGE AND FOR INGRESS AND EGRESS TO NEW CONSTRUCTION. THE EXTENT OF TRANSITIONS TO BE AS SHOWN ON PLANS.
12. ALL GRADING WORK SHALL CONFORM TO THE SOILS REPORT AS PREPARED BY THE SOILS ENGINEER APPROVED BY THE CITY ENGINEER, AND AS SHOWN ON THESE PLANS.
13. EXACT LOCATION OF ALL SAWCUT LINES MAY BE ADJUSTED OR DETERMINED IN THE FIELD BY A CITY OF LAS VEGAS ENGINEER IF LOCATION ON PLANS IS NOT CLEARLY SHOWN, OR EXISTING PAVEMENT CONDITION REQUIRES RELOCATIONS.
14. THE CONTRACTOR SHALL TAKE ALL PRECAUTIONS NECESSARY TO PROTECT EXISTING PERMANENT SURVEY MONUMENTS. ANY MONUMENTS DISTURBED SHALL BE REPLACED AND ADJUSTED PER AVAILABLE RECORDS IN ACCORDANCE WITH N.R.S. STATUTE NO. 625.550.
15. UTILITY COMPANY METER BOXES, MANHOLE LIDS, VALVE COVERS, ETC., SHALL BE LOCATED OUT OF DRIVEWAYS, DRIVEWAY APRONS, FLOWLINES, AND CROSS GUTTERS UNLESS WRITTEN APPROVAL IS GRANTED BY THE UTILITY COMPANY AND THE CITY ENGINEER.

WALL NOTES:
16. ALL WALLS, NEW OR EXISTING, ARE ONLY SHOWN ON CIVIL PLANS FOR THE PURPOSE OF REVIEWING GRADING RELATIONSHIPS; FLOOD CONTROL AND SIGHT DISTANCE AT INTERSECTIONS. NEW WALLS REQUIRE A SEPARATE PERMIT AND INSPECTION BY THE BUILDING DEPARTMENT.
17. ASPHALT MIX DESIGN MUST BE SUBMITTED AND APPROVED BY THE CITY ENGINEER PRIOR TO THE PLACEMENT OF ASPHALT WITHIN CITY RIGHT OF WAY.
18. CONTRACTOR SHALL ADJUST ALL NEW AND EXISTING INLETS, VALVE BOXES, MANHOLE RIMS, AND SEWER CLEAN OUTS, ETC. TO FINISH GRADE AS APPLICABLE WHETHER OR NOT THEY ARE SHOWN ON THE PLANS.
19. MATERIALS, HANDLING AND PLACEMENT OF PORTLAND CEMENT CONCRETE SHALL BE IN ACCORDANCE WITH APPLICABLE SECTIONS OF NDOT OR THE CLARK COUNTY AREA SPECIFICATIONS (AS APPLICABLE) AND THE PLANS AND DETAILS SHOWN HEREON.

LAS VEGAS VALLEY WATER DISTRICT NOTES

LVVWD PROJECT # N/A (NO CONNECTIONS)

1. NO WORK SHALL BEGIN UNTIL THE WATER PLANS HAVE BEEN APPROVED FOR CONSTRUCTION BY THE LVVWD. FOLLOWING WATER PLAN APPROVAL, NOTICE SHALL BE GIVEN TO THE LVVWD COMMUNICATION SUPPORT CENTER (258-7171) TWO (2) WORKING DAYS PRIOR TO THE START OF CONSTRUCTION. FOR FUTURE INSPECTIONS, NOTICE MUST BE GIVEN BY 2:00 P.M. THE BUSINESS DAY PRIOR TO THE REQUESTED LVVWD INSPECTION. WHEN REQUESTING INSPECTIONS, PLEASE REFER TO THE PROJECT # IDENTIFIED ABOVE.
2. ALL WORK SHALL CONFORM TO THE LVVWD STANDARD PLATES, DRAWINGS, AND SPECIFICATIONS, AND TO THE 2003 EDITION OF THE UNIFORM DESIGN AND CONSTRUCTION STANDARDS FOR POTABLE WATER SYSTEMS (UDACS).
3. ALL WORK, EXCEPT AS MODIFIED BY THESE PLANS OR BY NOTE 2 ABOVE, SHALL BE DONE IN ACCORDANCE WITH THE MOST RECENT DRAFT OR EDITION OF THE UNIFORM STANDARD SPECIFICATIONS FOR PUBLIC WORKS CONSTRUCTION OFF-SITE IMPROVEMENT, CLARK COUNTY AREA.
4. A SINGLE PIPE MATERIAL SHALL BE USED THROUGHOUT THE PROJECT UNLESS OTHERWISE APPROVED BY THE LVVWD.
5. ALL SERVICE LATERALS TWO (2) INCHES IN DIAMETER AND SMALLER SHALL BE TYPE K COPPER TUBING WITH LVVWD APPROVED SERVICE SADDLES.
6. ALL WATER METER BOXES SHALL BE LOCATED OUTSIDE OF DRIVEWAY AREAS.
7. ALL VALVES SHALL BE LOCATED OUTSIDE OF DRIVEWAYS, VALLEY AND CURB GUTTERS.
8. ALL WATER AND STORM DRAIN OR SANITARY SEWER CROSSINGS SHALL CONFORM TO SECTION 2.19 OF THE 2003 EDITION OF THE UDACS.
9. ALL WATER FACILITIES SHALL BE FILLED, DISINFECTED, PRESSURE TESTED, FLUSHED, FILLED, AND AN ACCEPTABLE WATER SAMPLE OBTAINED PRIOR TO CONNECTION TO THE LVVWD DISTRIBUTION SYSTEM.
10. THE CONTRACTOR MUST OBTAIN ALL METERS TWO (2) INCHES AND SMALLER FORM LVVWD CENTRAL STORES. TELEPHONE 258-3152 OR 258-3802, TWO (2) WORKING DAYS PRIOR TO METER PICKUP.
11. ANY INTERRUPTION OF SERVICE MUST BE PERFORMED IN ACCORDANCE WITH U.D.A.C.S. SECTION 3.13.01, AND APPROVED BY THE LVVWD INSPECTION DIVISION PRIOR TO SHUTDOWN. PROPER WRITTEN NOTIFICATION MUST BE GIVEN TO ALL AFFECTED CUSTOMERS.
12. ALL WATER FACILITY CONSTRUCTION MATERIALS USED MUST BE AS LISTED ON THE LVVWD PRE-APPROVED MATERIALS AND MANUFACTURER'S LISTING FOR NEW FACILITIES, LATEST REVISION, OR SPECIFICALLY APPROVED ON THESE PLANS.
13. TELEPHONE "CALL BEFORE YOU DIG" AT 1-800-227-2600.

APPROVED FOR CONSTRUCTION
N/A (NO CONNECTIONS)
LAS VEGAS VALLEY WATER DISTRICT DATE:

CITY OF LAS VEGAS TRAFFIC NOTES

1. ALL CONSTRUCTION SIGNING, BARRICADING, AND TRAFFIC DELINEATION SHALL CONFORM TO THE "NEVADA WORK ZONE TRAFFIC CONTROL HANDBOOK", LATEST EDITION, AND THE "MANUAL ON UNIFORM CONTROL DEVICES", LATEST EDITION.
2. THE STREET SIGN CONTRACTOR SHALL OBTAIN STREET NAMES AND BLOCK NUMBERING FROM THE PLANNING AND DEVELOPMENT DEPARTMENT PRIOR TO CONSTRUCTION.
3. BEFORE ANY WORK IS STARTED IN THE RIGHT OF WAY, THE CONTRACTOR SHALL INSTALL ALL ADVANCE WARNING SIGNS FOR THE CONSTRUCTION ZONE, THE CONTRACTOR SHALL INSTALL TEMPORARY STOP SIGNS AT ALL NEW STREET ENCROACHMENTS INTO EXISTING CITY STREETS WHERE WARRANTED IMMEDIATELY AFTER FIRST GRADING WORK IS ACCOMPLISHED, AND SHALL MAINTAIN SAID SIGNS UNTIL PERMANENT SIGNS ARE INSTALLED.
4. WHEN A CONNSTRUCTION WORK ZONE ENCROACHES UPON A DESIGNATED "SUGGESTED ROUTE TO SCHOOL" AND PUBLIC WORKS STAFF IDENTIFIES A NEED FOR STUDENTS SAFE CROSSING THROUGH THAT WORK ZONE, THE CONTRACTOR IS REQUIRED TO PROVIDE A QUALIFIED "CROSSING GUARD". THE GUARD SHALL BE PRESENT FOR THE FULL DURATION OF TIME THAT CHILDREN ARE LIKELY TO BE PRESENT.
5. IF THE IMPROVEMENTS NECESSITATE THE OBLITERATION, TEMPORARY OBSTRUCTION, TEMPORARY REMOVAL OR RELOCATION OF ANY EXISTING TRAFFIC PAVEMENT MARKING, SUCH PAVEMENT PARKING SHALL BE RESTORED OR REPLACED WITH LIKE MATERIALS TO THE SATISFACTION OF THE CITY TRAFFIC ENGINEER.
6. THE CONTRACTOR SHALL BE RESPONSIBLE FOR PROVIDING AND INSTALLING ALL PERMANENT SIGNS SHOWN ON THE PLANS. STREET NAME SIGNS SHALL CONFORM IN THEIR ENTIRETY TO CURRENT CITY STANDARDS. ALL OTHER SIGNS SHALL BE STANDARD SIZE UNLESS OTHERWISE SPECIFIED ON THE PLANS. ALL SIGN POSTS SHALL BE INSTALLED IN ACCORDANCE WITH THE CURRENT CITY STANDARDS.
7. WHEN A PROPOSED STREET LIGHT STANDARD IS LOCATED WITHIN FIVE (5') FEET OF ANY PROPOSED SIGN SHOWN ON THE PLANS TO BE MOUNTED ON A SIGNPOST, THE SIGN SHALL BE MOUNTED ON THE STREET LIGHT STANDARD AND THE SIGNPOST BE ELIMINATED.
8. ALL PERMANENT TRAFFIC CONTROL DEVICES CALLED FOR HEREON SHALL BE IN PLACE AND IN FINAL POSITION PRIOR TO ALLOWING ANY PUBLIC TRAFFIC ONTO THE PORTIONS OF THE ROAD(S) BEING IMPROVED HEREUNDER, REGARDLESS OF THE STATUS OF COMPLETION OF PAVING OR OTHER OFF-SITE IMPROVEMENTS CALLED FOR BY THESE PLANS.
9. STREET SIGNS AND STOP SIGNS SHALL BE INSTALL PER CITY STANDARD SPECIFICATIONS FOR THE PLACEMENT OF STREET NAME SIGNS
10. THE CONTRACTOR SHALL PROVIDE ALL NECESSARY TRAFFIC CONTROL DEVICES AND FLAGGERS TO ENSURE THE SAFETY OF THE PUBLIC IN OR AROUND THE WORK AREA. THE CONTRACTOR SHALL HAVE A CERTIFIED ATSSA TRAFFIC CONTROL TECHNICIAN OR IMSA WORK ZONE SAFETY SPECIALIST SET-UP, MAINTAIN AND/OR REMOVE ALL TRAFFIC CONTROL DEVICES IN THE CITY OF LAS VEGAS RIGHTS OF WAY.
11. WORK IN PUBLIC STREETS, ONCE BEGUN, SHALL BE EXPEDITED TO COMPLETION SO AS TO PROVIDE MINIMUM INCONVENIENCE TO AD

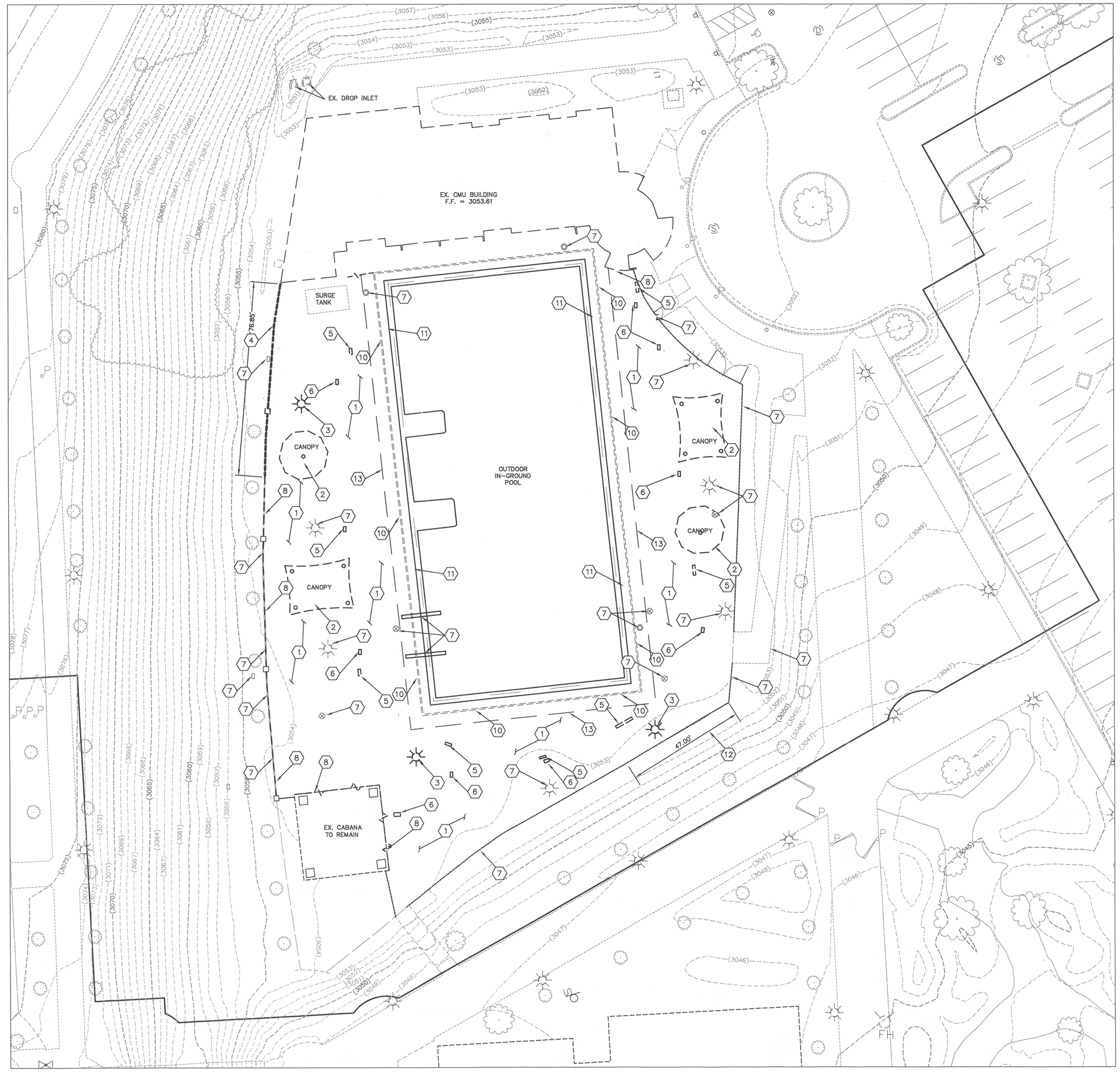

GRAPHIC SCALE

20 0 10 20 40

(IN FEET)
1 inch = 20 ft.

NORTH

NOTE:
LOCATION AND ELEVATION OF UNDERGROUND UTILITY PIPES ARE UNDETERMINED. CONTRACTOR TO PROCEED WITH CAUTION.

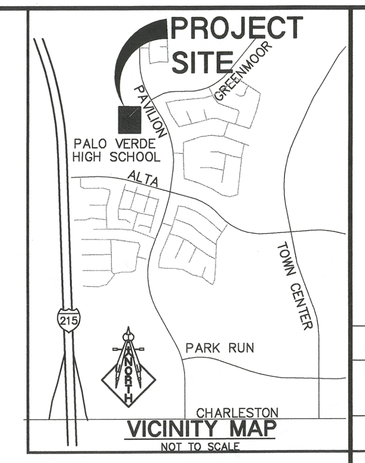

VICINITY MAP
NOT TO SCALE

DEMOLITION NOTES:

1. SAWCUT AND REMOVE EXISTING CONCRETE.
2. CITY OF LAS VEGAS TO REMOVE AND SALVAGE STRUCTURE ABOVE EXISTING CONCRETE DECK. CONTRACTOR TO REMOVE EMBEDDED POST FOOTING.
3. REMOVE & RELOCATE EXISTING LIGHT POLE PER ELEC. PLANS
4. REMOVE EXISTING FENCING
5. REMOVE EXISTING CONCRETE ELECTRICAL CONDUIT PILASTERS, JUNCTION BOXES TO BE RELOCATED INTO NEW WALLS. SEE ARCH PLANS FOR REFERENCE
6. REMOVE AND/OR RELOCATE EXISTING ELECTRICAL BOX. REFER TO E2.10 PLANS FOR REFERENCE
7. PROTECT IN PLACE
8. SAWCUT AT NEAREST JOINT
9. RELOCATE EXISTING LIGHT POLES. REFER TO ARCHITECTURAL AND ELECTRICAL PLANS
10. EXISTING DECK DRAIN. PROTECT IN PLACE.
11. EXISTING CONCRETE DECK TO REMAIN
12. EXISTING FENCE TO BE SAW-CUT, REPAIRED AND RELOCATED TO NE POSITION WITH NEW CMU PILASTER ON NEW FOOTING.
13. SAW CUT EXISTING JECK 5 FEET OUTSIDE EXISTING DECK DRAIN. SEE ARCH PLANS FOR ADDITIONAL INFORMATION

NOTE:

LOCHSA ENGINEERING ASSUMES NO RESPONSIBILITY FOR EXISTING UTILITY LOCATIONS AND ELEVATIONS. THE UTILITIES SHOWN ON THIS PLAN ARE FROM THE BEST AVAILABLE INFORMATION. IT IS THE CONTRACTOR'S RESPONSIBILITY TO FIELD VERIFY THE LOCATION AND ELEVATION OF ALL UTILITIES, INCLUDING BUT NOT LIMITED TO, THE WATER, FIRE, SANITARY SEWER, STORM SEWER, TELEPHONE, POWER, GAS, AND IRRIGATION LINES PRIOR TO THE COMMENCEMENT OF CONSTRUCTION. IF CONFLICT EXISTS IN THE FIELD, THE CONTRACTOR IS TO NOTIFY THE PROJECT ARCHITECT, OWNER'S REPRESENTATIVE AND THE PROJECT ENGINEER IMMEDIATELY.

A.P.N.:

137-35-501-004

BASIS OF BEARINGS:

BASIS OF BEARINGS IS THE CENTER LINE OF PAVILION CENTER DRIVE FROM THE INTERSECTION WITH GREENMOOR LANE SOUTH TO THE PC OF PAVILION CENTER DRIVE, AS SHOWN BY THAT MAP ON FILE IN BOOK 75 OF PLATS, PAGE 75 IN THE CLARK COUNTY RECORDER'S OFFICE, CLARK COUNTY, NEVADA.

SAID LINE BEARS SOUTH 29°24'00" EAST.

BENCHMARK:

CITY OF LAS VEGAS BENCH MARK – OLV09 36NWS
BEING A RIVET & PLATE IN THE TOP OF CURB AT THE NORTHWEST CORNER OF PAVILLION CENTER AND GREENMOOR.

ELEVATION: 3044.40 FEET / 927.93501 METERS
(NAVD '88 DATUM)

SAFETY ALERT
Call Before You Overhead
1-702-227-2929
AVOID CUTTING UNDERGROUND UTILITY LINES. IT'S COSTLY.
Call before you UnderGround
811
Know what's below. Call before you dig.
811 UNDERGROUND SERVICE ALERT (USA)
1-702-432-5300
NEVADA ONE NATIONAL SYSTEM OF OPERATIONS

LEGEND

| | | |

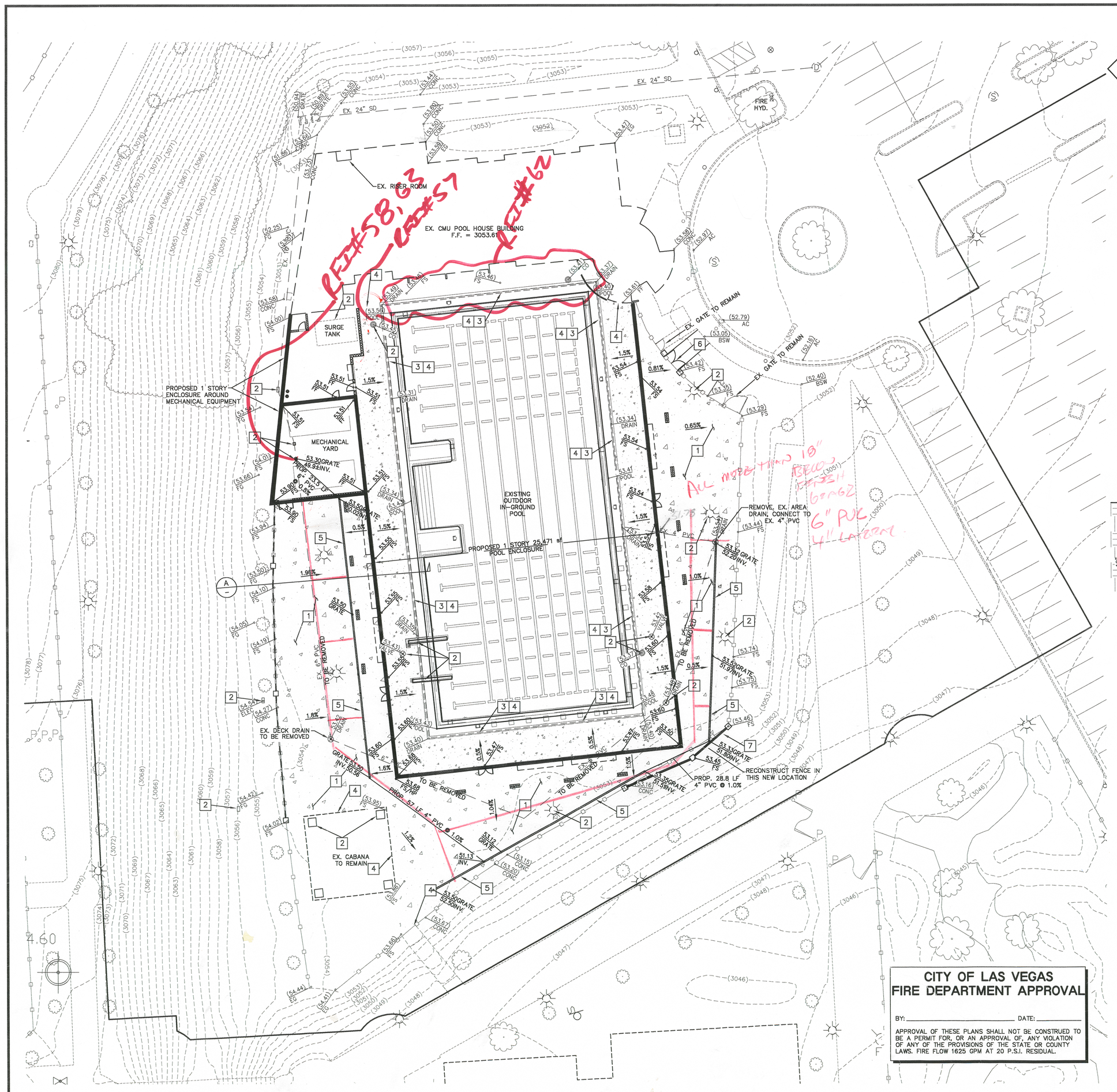



GRAPHIC SCALE

20 0 10 20 40

(IN FEET)
1 inch = 20 ft.

NOTE:
LOCATION AND ELEVATION OF UNDERGROUND UTILITY PIPES ARE UNDETERMINED. CONTRACTOR TO PROCEED WITH CAUTION.

GEOTECHNICAL NOTE:
A GEOLOGIST OR GEOTECHNICAL ENGINEER SHALL BE RETAINED DURING EXCAVATION AND MASS GRADING OPERATIONS TO EXAMINE THE SOIL CHARACTERISTICS AND GEOLOGICAL CONDITIONS ENCOUNTERED, AND TO PROVIDE PROFESSIONAL ADVICE TO THE OWNER IN THE EVENT THAT UNANTICIPATED SOIL PROBLEMS ARISE AND/OR SUBSURFACE SITE CONDITIONS ARE FOUND TO BE SIGNIFICANTLY DIFFERENT THAN DEFINED BY PRE-DESIGN EXPLORATION AND TESTING.

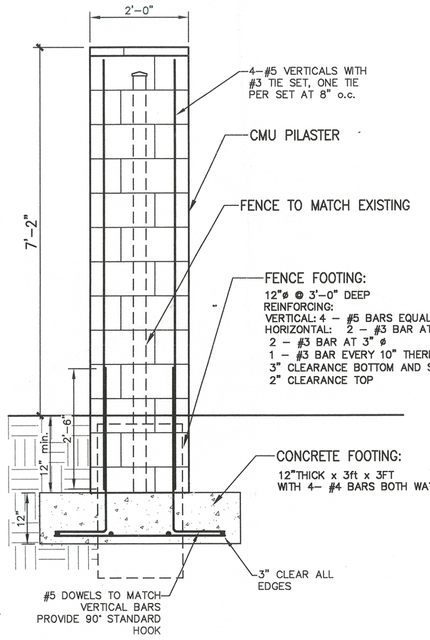

PILASTER SECTION
N.T.S.

FIRE FLOW CALCULATIONS

BUILDING	SHOPS 1
BASED ON:	
– SQUARE FOOTAGE	25,471 SF
– LARGEST AREA BETWEEN SEPARATION WALL	N/A
– BUILDING HEIGHT	39'-2"
– HIGH PILED STORAGE	NO
– TYPE OF CONSTRUCTION	II-B
– EXPOSURES	NA
– SPRINKLER SYSTEM	YES
– OCCUPANCY	A-3
– ROOF CONSTRUCTION	CLASS "C" METAL INSULATED PANELS
– FLOW REQUIRED @ 20 PSI RESIDUAL	1625 GPM

NOTE: PROPOSED SPRINKLER SYSTEM SHALL BE CONNECTED INTO THE EXISTING SPRINKLER SYSTEM LOCATED IN THE EXISTING POOL HOUSE

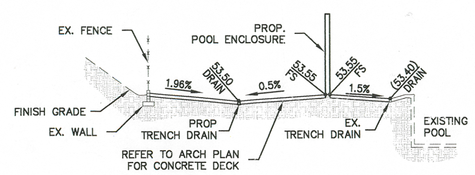

WESTERN SECTION

CITY OF LAS VEGAS
FIRE DEPARTMENT APPROVAL

BY: _____ DATE: _____

APPROVAL OF THESE PLANS SHALL NOT BE CONSTRUED TO BE A PERMIT FOR, OR AN APPROVAL OF, ANY VIOLATION OF ANY OF THE PROVISIONS OF THE STATE OR COUNTY LAWS. FIRE FLOW 1625 GPM AT 20 P.S.I. RESIDUAL.

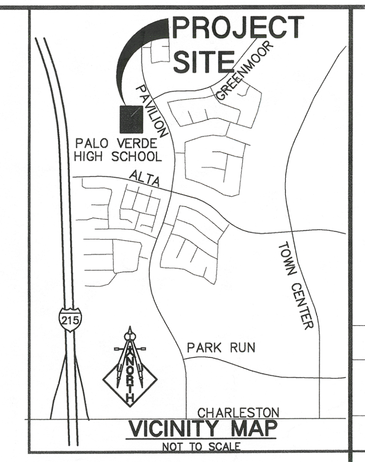

VICINITY MAP
NOT TO SCALE

CONSTRUCTION NOTES:

– ALL CONSTRUCTION TO BE DONE IN ACCORDANCE WITH "CLARK COUNTY AREA UNIFORM STANDARD DRAWINGS (C.C.A.U.S.D.)" LATEST EDITION AND/OR REGULATING ENTITY HAVING JURISDICTION.
– NOT ALL NOTES USED ON THIS SHEET –

1. CONSTRUCT CONCRETE PAVEMENT PER ARCHITECTURAL PLANS
2. PROTECT IN PLACE. ADJUST TO GRADE IF NECESSARY.
3. EXISTING POOL TRENCH DRAIN, PROTECT IN PLACE
4. MATCH EXISTING GRADE
5. INSTALL 4" STEGMEIER FLOWMASTER DECK DRAIN SYSTEM OR APPROVED EQUIVALENT. CONTRACTOR TO LOCATE AND CONNECT NEW DECK DRAIN SYSTEM INTO EXISTING DECK DRAIN DRAINAGE SYSTEM. REFER TO ARCHITECT FOR GRATE COLOR AND MATERIAL SPECIFICATIONS.
6. CONSTRUCT NEW DOUBLE GATE WITH NEW CMU PILASTER ON NEW FOOTING. NEW SIDEWALK TO MATCH EXISTING. SEE ARCH. PLANS FOR GATE DETAILS. SEE BELOW FOR FOOTING DETAIL.
7. EXISTING FENCE TO BE SAW-CUT, REPAIRED AND RELOCATED TO NEW POSITION WITH NEW CMU PILASTER ON NEW FOOTING. SEE BELOW FOR FOOTING DETAIL.

GRADING NOTES:

1. SLOPES 4:1 OR STEEPER AND FINE-GRAINED MATERIALS THAT HAVE BEEN DISTURBED (SANDY AND SILTY MATERIALS) SHOULD BE PROTECTED WITH BURLAP OR OTHER EROSION CONTROL FABRIC/MATERIAL, UNLESS OTHERWISE SPECIFIED BY LANDSCAPE DRAWINGS AND SPECIFICATIONS OR THE SOILS REPORT.

2. CONTRACTOR SHALL DETERMINE HIS OWN FOOTING OR BASEMENT EXCAVATION QUANTITIES, EVEN THOUGH SHOWN ON ROUGH GRADING PLANS. ADDITIONALLY, STRUCTURE BACKFILL COSTS SHOULD BE INCLUDED IN THE COST OF THE STRUCTURE, UNLESS OTHERWISE SPECIFIED IN THE CONTRACT DOCUMENTS.

3. CONTRACTOR SHALL NOTIFY LOCHSA ENGINEERING WITHIN 24 HOURS OF OMISSIONS AND ERRORS DISCOVERED ON PLANS. LOCHSA ENGINEERING WILL NOT BE RESPONSIBLE FOR ANY "CORRECTIVE" WORK DONE BY OTHERS.

4. CONTRACTOR TO ENSURE POSITIVE DRAINAGE. NO PONDING ALLOWED. CONTRACTOR TO FOLLOW RECOMMENDATIONS AS OUTLINED IN THE PROJECT GEOTECHNICAL REPORT, INCLUDING BUT NOT LIMITED TO EXCAVATION, GRADING AND COMPACTION. REFER TO THE REPORT PREPARED BY:
KLEINFELDER
6380 SOUTH POLARIS AVENUE
LAS VEGAS, NEVADA 89118
PROJECT #31-268906 DATED AUGUST 10, 1999
UPDATED DECEMBER 21, 2007
PROJECT # 90318

NOTE:

LOCHSA ENGINEERING ASSUMES NO RESPONSIBILITY FOR EXISTING UTILITY LOCATIONS AND ELEVATIONS. THE UTILITIES SHOWN ON THIS PLAN ARE FROM THE BEST AVAILABLE INFORMATION. IT IS THE CONTRACTOR'S RESPONSIBILITY TO FIELD VERIFY THE LOCATION AND ELEVATION OF ALL UTILITIES, INCLUDING BUT NOT LIMITED TO, THE WATER, FIRE, SANITARY SEWER, STORM SEWER, TELEPHONE, POWER, GAS, AND IRRIGATION LINES PRIOR TO THE COMMENCEMENT OF CONSTRUCTION. IF CONFLICT EXISTS IN THE FIELD, THE CONTRACTOR IS TO NOTIFY THE PROJECT ARCHITECT, OWNER'S REPRESENTATIVE AND THE PROJECT ENGINEER IMMEDIATELY.

A.P.N.:

137-35-501-004

BASIS OF BEARINGS:

BASIS OF BEARINGS IS THE CENTER LINE OF PAVILION CENTER DRIVE FROM THE INTERSECTION WITH GREENMOOR LANE SOUTH TO THE PC OF PAVILION CENTER DRIVE, AS SHOWN BY THAT MAP ON FILE IN BOOK 75 OF PLATS, PAGE 75 IN THE CLARK COUNTY RECORDER'S OFFICE, CLARK COUNTY, NEVADA.

SAID LINE BEARS SOUTH 29°24'00" EAST.

BENCHMARK:

CITY OF LAS VEGAS BENCH MARK – GLVD9 36NWS
BEING A RIVET & PLATE IN THE TOP OF CURB AT THE NORTHWEST CORNER OF PAVILLION CENTER AND GREENMOOR.

ELEVATION: 3044.40 FEET / 927.93501 METERS
(NAVD '88 DATUM)

SAFETY ALERT

Call Before You Overhead

AVOID CUTTING UNDERGROUND UTILITY LINES. IT'S COSTLY.

Call before you UnderGround

811 Know what's below. Call before you dig.

1-702-227-2929

1-702-432-5300

811 UNDERGROUND SERVICE ALERT (USA)

REV:	DATE:	BY:	DESCRIPTION:

LOCHSA ENGINEERING
6345 SOUTH JONES BOULEVARD SUITE 100
LAS VEGAS, NV 89118
PHONE: (702) 365-9312, FAX: (702) 365-9317

SHEET: GRADING PLAN

TITLE: CITY OF LAS VEGAS
PAVILION POOL ENCLOSURE

DRAWN BY:	DESIGNED BY:	CHECKED BY:	PROJECT No.:
R.A.	R.A.	G.M.M.	071181

DATE:	DATE:	DATE:	SCALE:
03-26-09	03-26-09	03-26-09	1"=20'

SEAL
STATE OF NEVADA
GUY M. MORRIS
Exp. 12-31-09
CIVIL
No. 14525
03-26-09

SHEET No.
C3.01
SHEET 4 OF 4
DRAWING No.

LEGEND			DESCRIPTION:	CONTOUR LINES	EDGE OF PAVEMENT	"A" TYPE CURBS	"L" TYPE CURBS	WALLS	FENCES	AC PAVEMENT	CONCRETE	SPOT ELEVATIONS	SIGNS	MANHOLE W/ DESCRIPTION	MANHOLE DESCRIPTIONS	FIRE HYDRANTS	GATE VALVES	REDUCERS	CLEAN OUTS	UTILITY BOX OR VAULT	BACKWATER VALVES	100w HPS STREETLIGHTS	150w HPS STREETLIGHTS	200w HPS STREETLIGHTS	250w HPS STREETLIGHTS
CL OR SURVEY LINE	EASEMENT LINE		EXISTING:	(2210)								(12.34)		S	S = SANITARY SEWER						BWV				
PROPERTY LINE	SAWCUT LINE		PROPOSED:	2122								BC 12.34 TC		D	D = STORM DRAIN						BWV				
ROW LINE	SCARP LINE													E	E = ELECTRICAL										
														T	T = TELEPHONE										

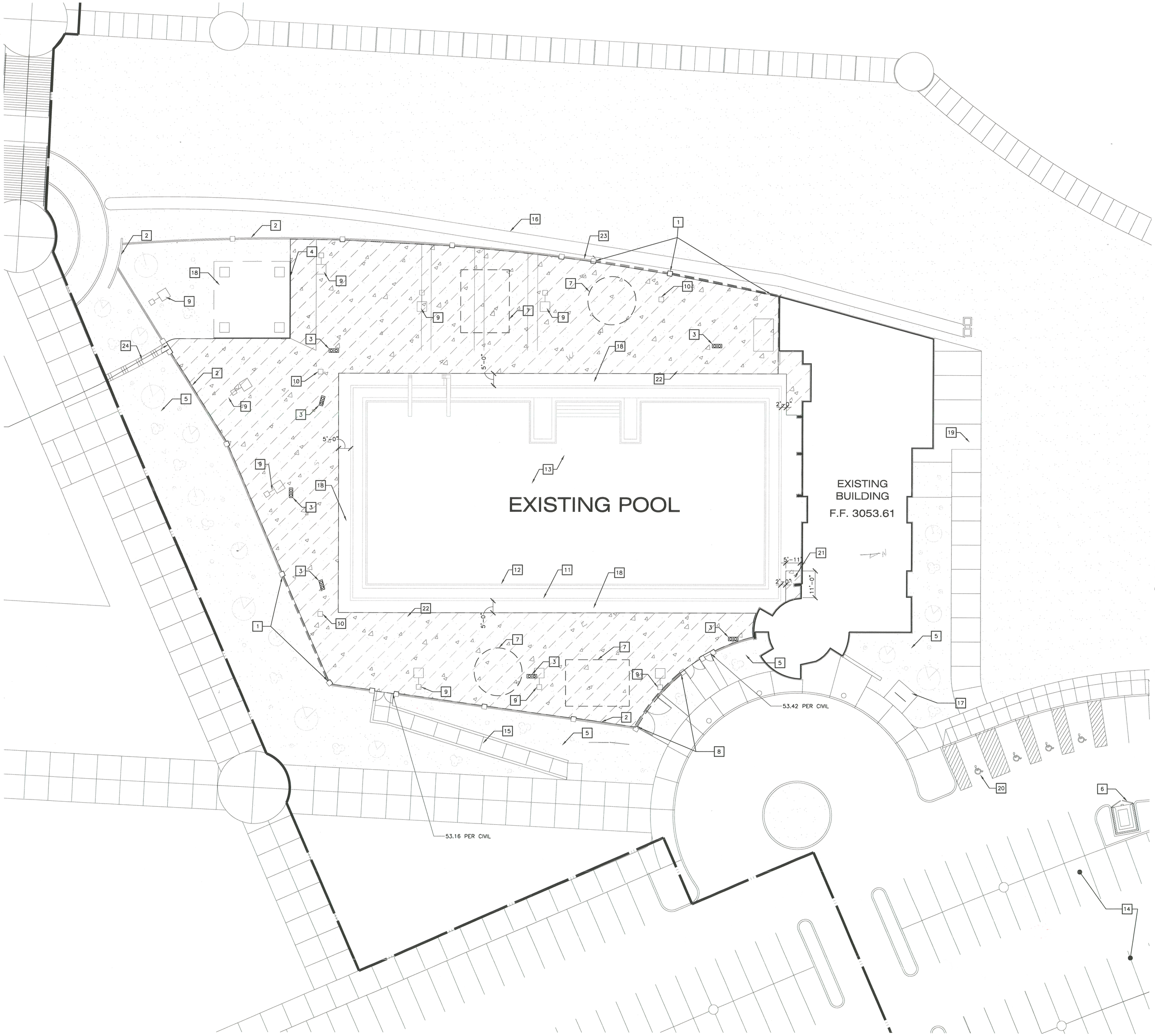

SHEET NOTES

1. THIS DRAWING IS DIAGRAMMATIC ONLY, IT WAS PREPARED BASED ON INFORMATION FURNISHED BY OTHERS. THE FULL EXTENT OF DEMOLITION SHALL BE DETERMINED IN THE FIELD BY THE CONTRACTOR. FAILURE OF THE CONTRACTOR TO FIELD VERIFY SHALL NOT RELIEVE THE CONTRACTOR OF ANY REQUIREMENTS TO COMPLETE THE WORK SHOWN.
2. THE CONTRACTOR SHALL VERIFY EXISTING CONDITIONS PRIOR TO BID AND NOTIFY THE ARCHITECT OF ANY DISCREPANCIES.
3. THE CONTRACTOR SHALL COORDINATE ALL DEMOLITION, REMOVAL AND STORAGE OF ALL PORTIBLE FUNISHINGS EQUIPMENT THAT REMAIN AS THE PROPERTY OF THE OWNER PRIOR TO THE START OF ANY WORK.
4. CAP AND PLUG EXISTING UTILITIES AS REQUIRED.
5. ALL MATERIALS WHICH ARE NOT RELOCATED OR RE-USED SHALL BE TURNED OVER TO THE OWNER OR REMOVED FROM THE SITE (WITH THE OWNERS APPROVAL) AT NO ADDITIONAL COST TO THE OWNER.
6. SEE SHEET A0.20 FOR EXISTING BUILDING SELECTIVE DEMOLITION
7. CONTRACTOR SHALL PROTECT; OR REMOVE; STORE & REPLACE LANDSCAPING, IRRIGATION & FENCING TO EXISTING CONDITIONS

KEY NOTES

1. PORTION OF EXISTING FENCE TO BE REMOVED. SEE A1.10 FOR REFERENCE
2. EXISTING FENCE TO REMAIN
3. CONCRETE CONDUIT PILASTERS TO BE REMOVED & JUNCTION BOXES TO BE RELOCATED. SEE SHEET E2.10
4. EXISTING CABANA TO REMAIN
5. EXISTING LANDSCAPE TO REMAIN
6. EXISTING TRASH ENCLOSURE TO REMAIN
7. EXISTING FABRIC, STRUCTURE AND BASES TO BE REMOVED, STORED AND CLEANED BEFORE REUSE BY CONTRACTOR
8. PORTION OF EXISTING FENCE TO BE REMOVED FOR PROPOSED CONSTRUCTION ACCESS. PROTECT EXISTING CONCRETE & RESTORE FENCE
9. EXISTING LIGHT POLE TO REMAIN. CONTRACTOR TO PAINT AND PATCH LIGHT BASE.
10. EXISTING LIGHT POLE, BASE, CONDUIT AND WIRE TO BE REMOVED
11. EXISTING LINEAR DECK DRAIN TO REMAIN
12. EXISTING PERIMETER POOL DRAIN TO REMAIN
13. DRAIN POOL, REMOVE POOL PLASTER, PREPARE SURFACE FOR NEW PLASTER & RE-PLASTER POOL.
14. EXISTING PARKING
15. EXISTING ADA RAMP
16. EXISTING SWALE TO REMAIN
17. EXISTING TRANSFORMER
18. EXISTING CONCRETE DECK TO REMAIN
19. EXISTING SIDEWALK
20. EXISTING H.C. PARKING STALLS (4)
21. CONCRETE DECK TO BE REMOVED
22. REMOVAL OF CONCRETE DECK TO BEGIN @ 5'-0" AWAY FROM DECK DRAIN
23. PATCH AND REPAIR FENCE

SITE LEGEND

PROPERTY LINE

CONCRETE DECK TO BE REMOVED.

NOTE: CONTRACTOR IS RESPONSIBLE FOR COORDINATION WITH UNDERGROUND UTILITIES CONDUIT.

REMOVE DECK TO EDGE OF EXISTING BIULDING.

NORTH

SITE DEMOLITION PLAN
1/16" = 1'-0"

F.Y.I. ONLY

PERMIT SET

REVISIONS

CONSULTANT

SH ARCHITECTURE
737 S. 7th St. Suite 120 Las Vegas Nevada 89128
ph 702.243.2222 fax 702.243.6060 www.sh-architecture.com

CITY OF LAS VEGAS
PAVILION POOL COVER
101 SOUTH PAVILION CENTER DRIVE
LAS VEGAS, NEVADA 89144
DEMOLITION SITE PLAN

STAMP
CURT JOHN CARLSON REGISTERED No. 3483 ARCHITECT STATE OF NEVADA
MAR 26 2009

OWNER: CITY OF LAS VEGAS
DEPARTMENT OF PUBLIC WORKS
ARCHITECTURAL SERVICES

400 EAST STEWART AVENUE
LAS VEGAS, NEVADA 89101
PHONE: (702) 229-6535
FAX: (702) 384-4946
TDD: (702) 386-9108

DRAWN	MAP/JW
FILE	A0.10
DATE	03-26-09
SCALE	1/16"=1'-0"
BID NO	07-15341.05
CLV DWG NO	107V3596-2
SHT NO	A0.10

REVISED 8/27/03

DRAWINGS AS INSTRUMENTS OF SERVICE ARE THE PROPERTY OF THE DESIGN PROFESSIONAL WHOSE STAMP OF CERTIFICATION APPEARS ON THE DRAWINGS AND SPECIFICATIONS ANY USE OR REPRODUCTION IN WHOLE OR IN PART WITHOUT WRITTEN CONSENT IS STRICTLY PROHIBITED COPIES OF THE DRAWINGS AND SPECIFICATIONS RETAINED BY THE CLIENT MAY BE UTILIZED ONLY FOR OCCUPYING THE PROJECT FOR WHICH THEY WERE PREPARED AND NOT FOR THE CONSTRUCTION OF ANY OTHER PROJECT © A.C.S.A.

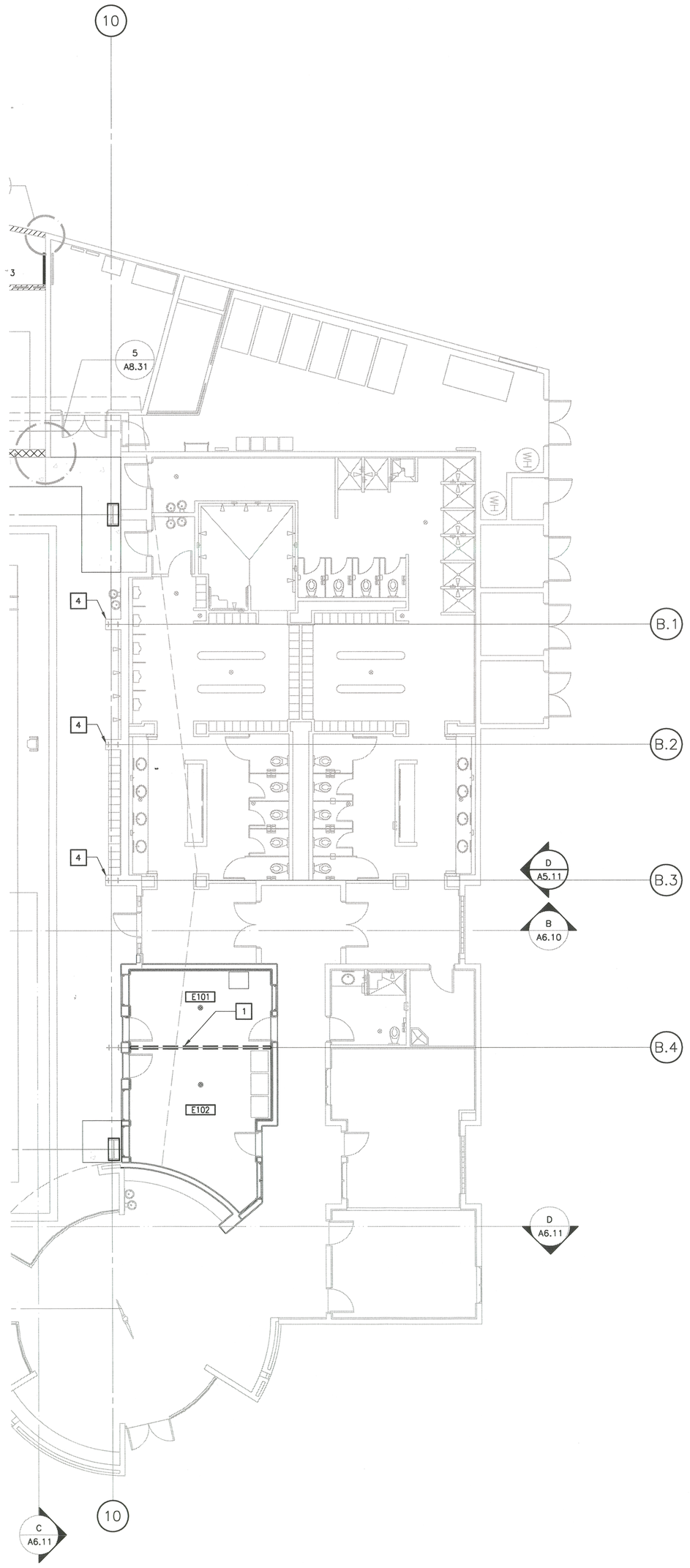

NORTH

DEMOLITION FLOOR PLAN

1/8" = 1'-0"

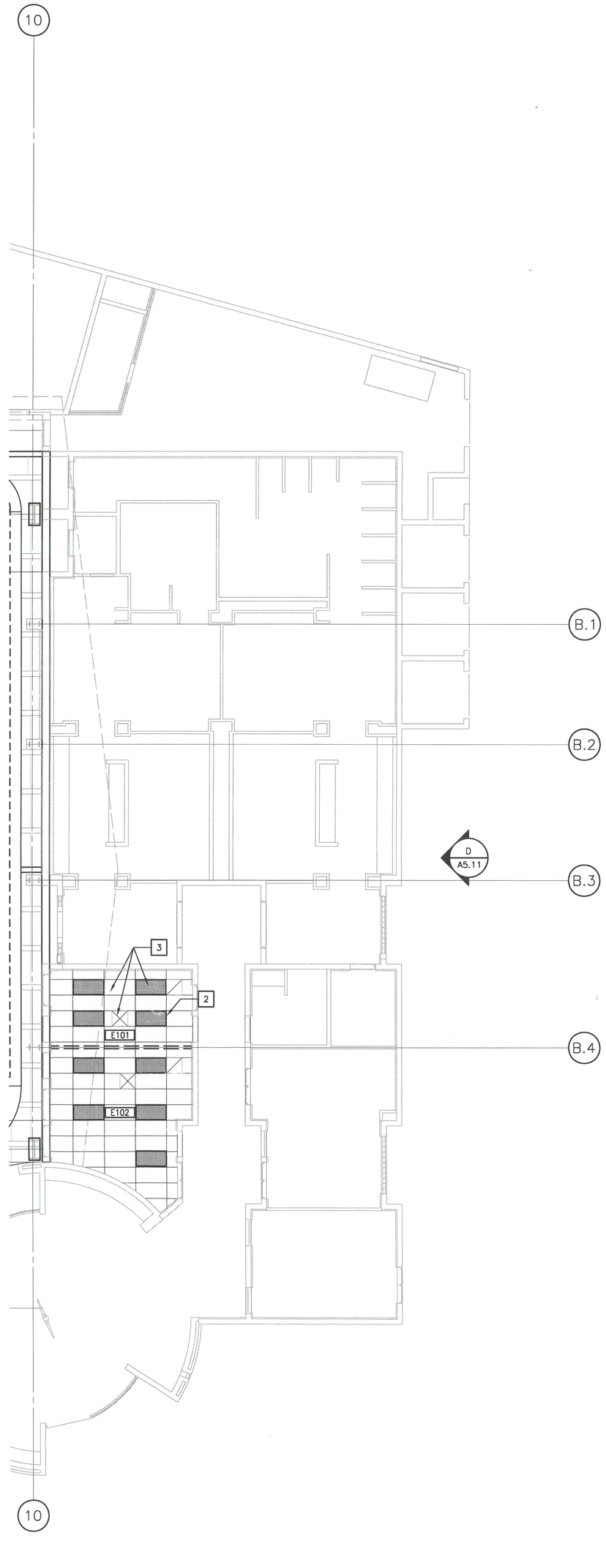

NORTH

DEMOLITION REFLECTED CEILING PLAN

1/8" = 1'-0"

SHEET NOTES

1. REMOVE & REPLACE CEILING TILES. REMOVE SUSPENSION SYSTEMS AND ALL CEILING MOUNTED EQUIPMENT FOR RE-USE. RELOCATE EXISTING SPRINKLE HEADS ACCORDINGLY PER NEW CEILING LAYOUT. SEE SHEET A3.11 FOR INSTALLATION LOCATIONS.
2. SEE A0.10 DEMOLITION PLAN

KEY NOTES

1. EXISTING WALL TO BE REMOVED
2. EXISTING LIGHT FIXTURE TO BE RELOCATED. REFER TO A3.11 FOR DETAILS.
3. EXISTING CEILING TILE SYSTEM & EQUIPMENT TO BE REMOVED & RECONFIGURED. SEE SHEET A3.11 FOR DETAILS.
4. EXISTING PILASTER TO BE REMOVED. PATCH AND REPAIR EXISTING CMU WALL AND ROOF.

RFI #5

ROOM LEGEND - EXISTING

ROOM NO.	DESCRIPTION
E101	LIFE GUARD STATION
E102	STAFF OFFICE

PERMIT SET

F.Y.I ONLY

REVISIONS

CONSULTANT

SH ARCHITECTURE
7373 Peak Drive Suite 250 Las Vegas Nevada 89128
ph 702.363.2222 fax 702.363.6060 www.sh-architecture.com

CITY OF LAS VEGAS
PAVILION POOL COVER
101 SOUTH PAVILION CENTER DRIVE
LAS VEGAS, NEVADA 89144
DEMOLITION
BUILDING PLANS

STAMP

CURT JOHN CARLSON
REGISTERED
No. 9348
ARCHITECT
STATE OF NEVADA
MAR 2 6 2009

OWNER: CITY OF LAS VEGAS
DEPARTMENT OF PUBLIC WORKS
ARCHITECTURAL SERVICES

400 EAST STEWART AVENUE
LAS VEGAS, NEVADA 89101
PHONE: (702) 229-6535
FAX: (702) 384-4846
TDD: (702) 386-9108

DRAWN	MAP/JW
FILE	A0.20
DATE	03/26/09
SCALE	1/8"=1'-0"
BID NO	07-15341.05
CLV DWG NO	107V3596-2
SHT NO	A0.20

REVISED 8/27/03

DRAWINGS AS INSTRUMENTS OF SERVICE ARE THE PROPERTY OF THE DESIGN PROFESSIONAL WHOSE STAMP OF CERTIFICATION APPEARS ON THE DRAWINGS AND SPECIFICATIONS ANY USE OR REPRODUCTION IN WHOLE OR IN PART WITHOUT WRITTEN CONSENT IS STRICTLY PROHIBITED COPIES OF THE DRAWINGS AND SPECIFICATIONS RETAINED BY THE CLIENT MAY BE UTILIZED ONLY FOR OCCUPYING THE PROJECT FOR WHICH THEY WERE PREPARED AND NOT FOR THE CONSTRUCTION OF ANY OTHER PROJECT N A C 823.780

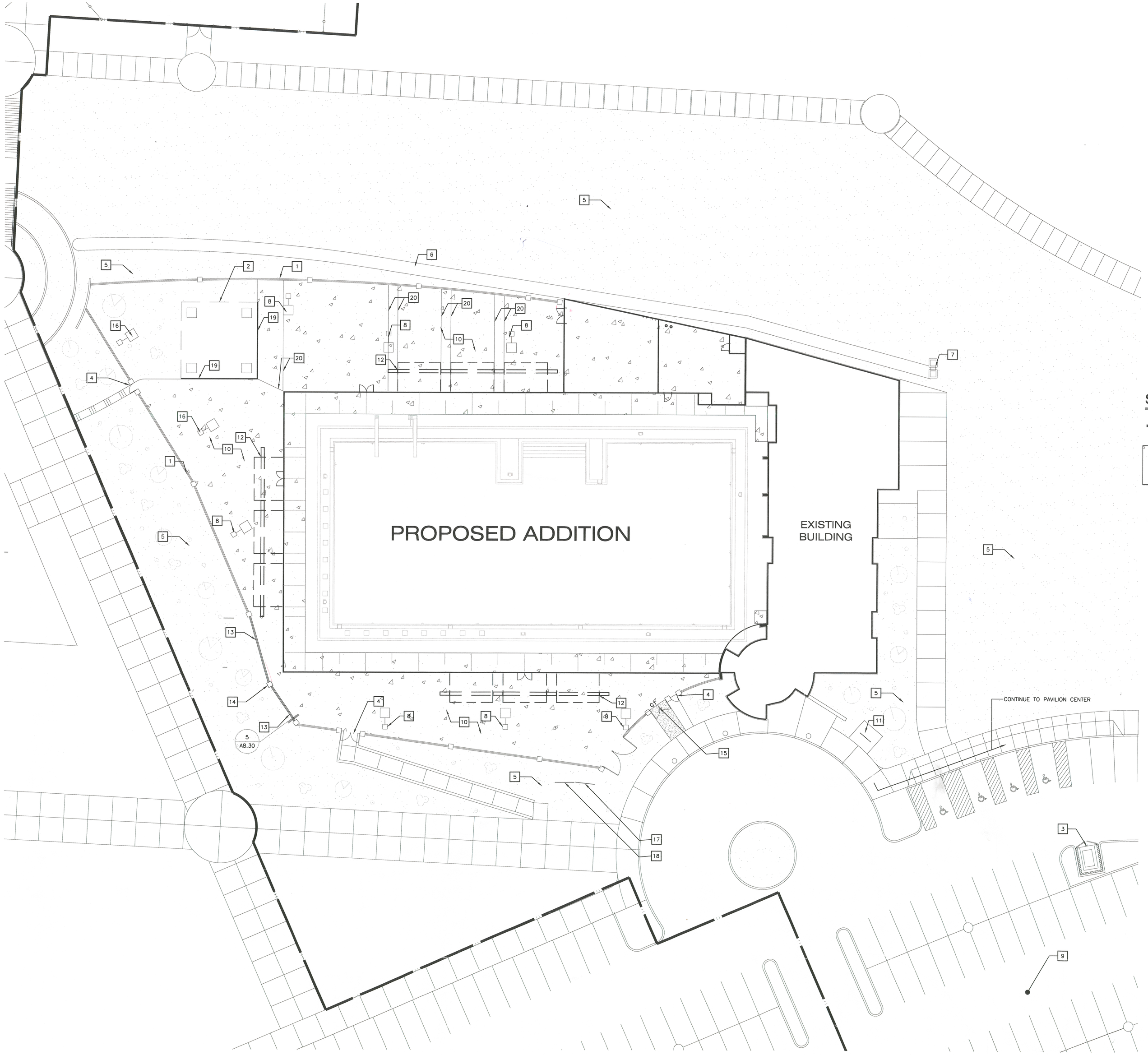

ENLARGED SITE PLAN

1/16" = 1'-0"

SHEET NOTES

A. SEE A0.10 FOR EXISTING AND DEMOLITION CONDITIONS.

B. ALL SIDEWALKS ON SITE ARE EXISTING AND SHALL REMAIN AS IS. ANY SIDWALKS TO BE REPLACED SHALL BE ACCESSIBLE. SIDEWALKS ARE TO HAVE A MAXIMUM OF 4.5% SLOPE AND A 1.5% CROSS SLOPE.

C. ALL NEW CONCRETE DECKS TO BE STANDARD GRAY W/ A MEDIUM BROOM FINISH.

KEY NOTES

1. EXISTING FENCE
2. EXISTING RAMADA AND DECK TO REMAIN
3. EXISTING TRASH ENCLOSURE
4. EXISTING GATE DOOR WITH PANIC HARDWARE
5. LANDSCAPE – REPLACE TO MATCH EXISTING WHERE CONSTRUCTION DAMAGE OCCURS SEE G2.10 FOR LIMITS OF WORK
6. EXISTING SWALE
7. EXISTING SWALE INLETS
8. EXISTING LIGHT POLES
9. EXISTING PARKING
10. 4" CONCRETE SLAB ON GRADE
11. EXISTING TRANSFORMER
12. TRELLIS
13. NEW FENCE – MATCH EXISTING
14. NEW COLUMN – MATCH EXISTING
15. DOUBLE GATE DOOR W/ PANIC HARDWARE MATCH EXISTING – 18/A8.10
16. RELOCATED LIGHT POLES
17. LOCATION OF PROJECT SIGN. SEE 1/A8.31
18. LOCATION OF PROJECT SIGN. SEE 2/A8.31
19. EXPANSION JOINT

SITE LEGEND

PROPERTY LINE

EXTENT OF NEW CONCRETE (SCORE LINES TO MATCH EXISTING)

APPROVED
site plan for pool cover only
BY [signature] 03/27/09
CURRENT PLANNING DIVISION
CITY OF LAS VEGAS

IBC 1104. Accessible Exterior Routes. Accessible exterior routes shall be provided from public transportation stops, accessible parking and accessible passenger loading zones and public sidewalks to the accessible building entrance they serve.

When more than one building or facility is located on a site, at least one accessible route shall connect accessible elements, facilities and buildings that are on the same site. The accessible route between accessible parking and accessible building entrances shall be the most practical direct route.

PLANS APPROVED
ARCHITECTURAL
[illegible]
DATE: APR 21 2009
Does Not Include Structural, Plumbing, Mechanical, Structural or Off Site Improvements Make No Change Without Approval Plan Is Not a Permit to Violate Any Ordinance

PERMIT SET

REVISIONS

CONSULTANT

SH ARCHITECTURE
7373 Peak Drive Suite 250 Las Vegas Nevada 89128
ph 702.363.2222 fax 702.363.6060 www.sh-architecture.com

CITY OF LAS VEGAS
PAVILION POOL COVER
101 SOUTH PAVILION CENTER DRIVE
LAS VEGAS, NEVADA 89144

SITE PLAN

STAMP

CURT JOHN CARLSON
REGISTERED
No. 8443
ARCHITECT
STATE OF NEVADA
MAR 26 2009

OWNER: CITY OF LAS VEGAS
DEPARTMENT OF PUBLIC WORKS
ARCHITECTURAL SERVICES

400 EAST STEWART AVENUE
LAS VEGAS, NEVADA 89101
PHONE: (702) 229-6535
FAX: (702) 384-4846
TDD: (702) 386-9108

DRAWN	MAP/JW
FILE	A1.10
DATE	03-26-09
SCALE	1/16"=1'-0"
BID NO	07-15341.05
CLV DWG NO	107V3596-2
SHT NO	A1.10

REVISED 8/27/03

DRAWINGS AS INSTRUMENTS OF SERVICE ARE THE PROPERTY OF THE DESIGN PROFESSIONAL WHOSE STAMP OF CERTIFICATION APPEARS ON THE DRAWINGS AND SPECIFICATIONS RETAINED BY THE CLIENT MAY BE UTILIZED ONLY FOR DISCLOSING THE PROJECT FOR WHICH THEY WERE PREPARED AND NOT FOR THE CONSTRUCTION OF ANY OTHER PROJECT IN A C 623.780

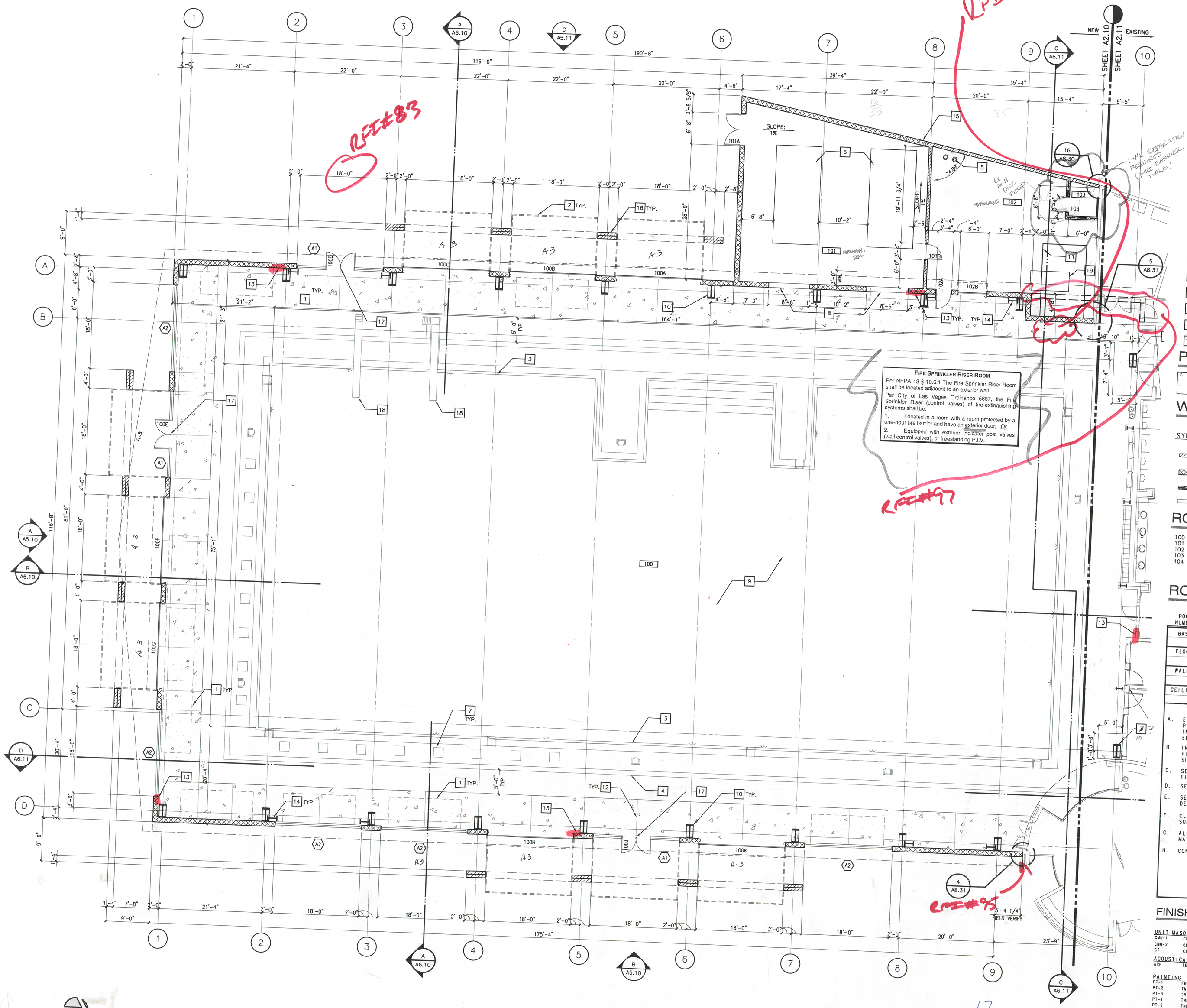

FLOOR PLAN POOL AREA
1/8" = 1'-0"

SHEET NOTES

A. SEE CIVIL FOR CONCRETE ELEVATIONS

KEY NOTES

1. REMOVABLE BLEACHERS TO BE PROVIDED BY CITY
2. TRELLIS ABOVE
3. EXISTING POOL OUTLINE
4. EXISTING LINEAR DECK DRAIN
5. ROOF DRAIN LEADERS
6. NEW MECHANICAL EQUIPMENT HOUSEKEEPING PADS
7. STARTING BLOCKS TO REMAIN, PROTECT IN PLACE
8. MECHANICAL LOUVER (PT-2)
9. REPLASTER POOL & FILL PER SPECIFICATIONS
10. PRE-ENGINEERED STRUCTURAL COLUMN INSTALLED ON 6" CONCRETE BASE. SLOPE FOR DRAINAGE
11. EXISTING SURGE TANK FOR POOL
12. CONTROL JOINT - MATCH EXISTING
13. FIRE EXTINGUISHER CABINETS - RECESSED. -RFI#47
14. PORTAL FRAME ?
15. OPENINGS IN WALL FOR DRAINAGE. SEE C/A5.11
16. WALL ABOVE
17. REMOVABLE MULLION
18. EXISTING DIVE PLATFORM, PROTECT IN PLACE
19. BOILER HOUSEKEEPING PAD. GC TO COORDINATE PAD SIZE WITH MECHANICAL AS REQUIRED.

PLAN LEGEND

SHADED AREA INDICATES EXTENT OF NEW CONCRETE POOL DECK

WALL LEGEND

SYMBOL	WALL DESCRIPTION	RATING	LISTED ASSEMBLY
	8" x 8" x 16" CMU	N/R	NONE
	12" x 8" x 16" CMU	N/R	NONE
	8" x 8" x 16" CMU	1 HR.	WL-1
	EXISTING		

ROOM LEGEND

100 SWIMMING POOL
101 EXTERIOR MECHANICAL ROOM
102 STORAGE
103 ELECTRICAL CLOSET ?
104 STAFF OFFICE

ROOM FINISH SCHEDULE

ROOM NUMBER	100	101	102	103	104
BASE	N/A	N/A	N/A	N/A	MATCH EXIST.
FLOOR	SC	SC	SC	SC	MATCH EXIST.
WALLS	PT-2	--	PT-2	PT-1	MATCH EXIST.
CEILING	PT-2	--	EXPOSED	EXPOSED	MATCH EXIST.

A. EXTERIOR SIDE OF HOLLOW METAL DOOR & FRAMES TO BE PAINTED PER THE EXTERIOR ELEVATIONS. WHERE INTERIOR DOOR COLOR IS INDICATED IN THE DOOR SCHEDULE PAINT INTERIOR FACES AND EDGES TO THE STOP.

B. INTERIOR ITEMS ON BUILDING WALLS: ELECTRICAL CONDUIT, PIPING AND OTHER MISC. ITEMS ARE PAINTED TO MATCH ADJACENT SURFACE UNLESS PRE-FINISHED OR NOTED OTHERWISE.

C. SEE EXTERIOR ELEVATIONS FOR EXTERIOR PAINT COLORS AND FINISHES

D. SEE FRAME TYPES FOR GLAZING AND ALUM. STOREFRONT COLORS.

E. SEE FLOOR, REFLECTED CEILINGS, ELEVATIONS, SECTIONS AND DETAILS FOR LOCATIONS AND FINISH INFORMATION.

F. CLEAN AND SEAL ALL INTERIOR AND EXTERIOR EXPOSED CMU SURFACES IN ACCORDANCE WITH SPECIFICATIONS DIVISION 04000.

G. ALL FINISHES IN THE EXISTING ROOM TO MATCH EXISTING MATERIALS U.N.O.

H. CONCRETE FINISH IS STANDARD GRAY WITH MEDIUM BROOM FINISH

PERMIT SET

FINISH LEGEND

UNIT MASONRY
CMU-1 CEMEX, SPLIT FACE, MOCHA #15
CMU-2 CEMEX, SMOOTH FACE, WHITE #3
GT CEMEX, MORTAR, OAK, TYPE S/#201

ACOUSTICAL ROOF PANEL
ARP TECTUM INC. - PAINT (PT-2)

PAINTING
PT-1 FRAZEE, CL 2671W, SUGAR LOAF LRV 79
PT-2 TNEMEC PAINT TO MATCH PT-1 COLOR
PT-3 TNEMEC PAINT TO MATCH PT-11
PT-4 TNEMEC, 49BR, MOCHA
PT-5 TNEMEC PAINT TO MATCH PT-12
PT-10 FRAZEE, CL 2673W, TROTTING LRV 56
PT-11 FRAZEE, CL 2146D, NINTH CENTURY LRV 21
PT-12 FRAZEE, CL 2386A, GASPE LRV 14
PT-20 FRAZEE, CL 2145D, FAUNEN TEMPLE LRV 29
PT-21 FRAZEE, CL 2375D, HERON LRV 21

FLOORING
SC SEALED CONCRETE

APPROVED
Plans are for plan review only
BY _____ 03/26/09
CURRENT PLANNING DIVISION
CITY OF LAS VEGAS

PLANS APPROVED
ARCHITECTURAL
Building & Safety Dept.
City of Las Vegas, Nevada
DJV APR 21 2009
Does Not Include Electrical, Plumbing, Mechanical, Structural or Off-Site Improvements

REVISIONS

CONSULTANT

SH ARCHITECTURE
7373 Peak Drive Suite 250 Las Vegas Nevada 89128
ph. 702.363.2227 fax 702.363.8660
www.sh-architecture.com

CITY OF LAS VEGAS
PAVILION POOL COVER
101 SOUTH PAVILION CENTER DRIVE
LAS VEGAS, NEVADA 89144

FLOOR PLAN

STAMP
CURT JOHN CARLSON
REGISTERED
No. 3443
ARCHITECT
STATE OF NEVADA
MAR 26 2009

OWNER: CITY OF LAS VEGAS
DEPARTMENT OF PUBLIC WORKS
ARCHITECTURAL SERVICES
400 EAST STEWART AVENUE
LAS VEGAS, NEVADA 89101
PHONE: (702) 229-6535
FAX: (702) 384-4846
TDD: (702) 386-9108

DRAWN	MAP/JW
FILE	A2.10
DATE	03-26-09
SCALE	1/8"=1'-0"
BLD NO	07-15341.05
CLV DWG NO	107V3596-2

ALL DRAWINGS AND WRITTEN MATERIAL APPEARING HEREIN CONSTITUTE ORIGINAL AND UNPUBLISHED WORK OF THE ARCHITECT AND THE ARCHITECT'S CONSULTANTS AND SHALL NOT BE USED BY ANY PERSON OR ENTITY FOR ANY PURPOSE WHATSOEVER WITHOUT THE WRITTEN CONSENT OF THE ARCHITECT. ALL COPYRIGHTS AND OTHER PROPERTY RIGHTS IN THE DRAWINGS AND SPECIFICATIONS RETAINED BY THE CLIENT MAY BE UTILIZED ONLY FOR OCCUPYING THE PROJECT FOR WHICH THEY WERE PREPARED AND ANY EXTENSIONS OF THAT PROJECT. ALL OTHER USES ARE PROHIBITED WITHOUT THE WRITTEN CONSENT OF THE DESIGN PROFESSIONAL. ALL UNPUBLISHED RIGHTS RESERVED UNDER FEDERAL COPYRIGHT LAWS. THIS DRAWING IS A PROPERTY OF THE DESIGN PROFESSIONAL WHOSE STAMP OF CERTIFICATION APPEARS ON THE DRAWINGS AND SPECIFICATIONS. ANY USE OR REPRODUCTION IN WHOLE OR IN PART WITHOUT WRITTEN CONSENT IS STRICTLY PROHIBITED COPIES OR INSTRUMENTS OF SERVICE ARE THE PROPERTY OF THE DESIGN PROFESSIONAL

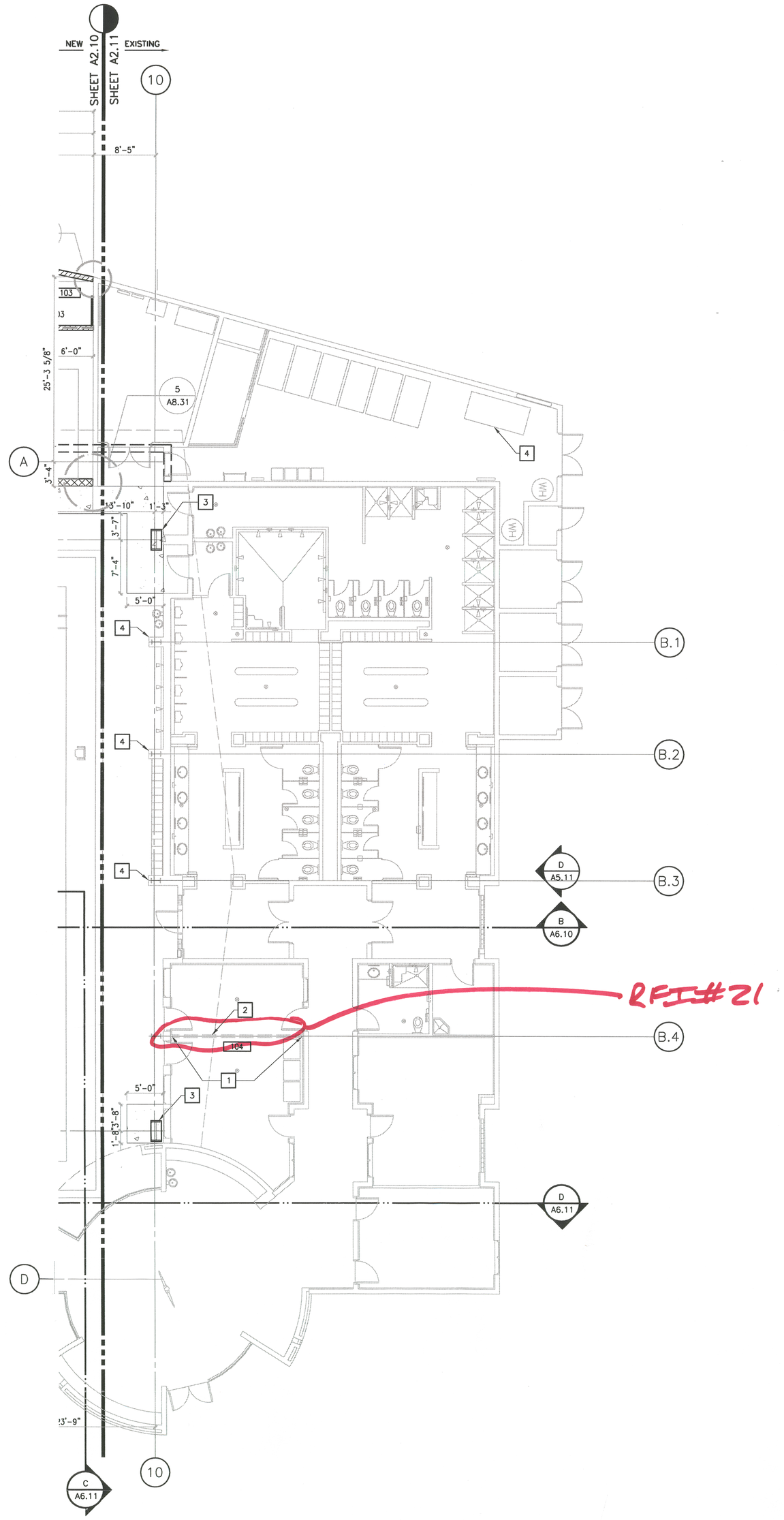

NORTH

FLOOR PLAN - EXISTING BUILDING

1/8" = 1'-0"

KEY NOTES

1. PATCH AND REPAIR EXISTING METAL STUD WALL. mATCH EXISTING TEXTURE AND COLOR OF SURROUNDING
2. PATCH & REPAIR FLOORING TO MATCH EXISTING
3. PRE-ENGINEERED STRUCTURAL COLUMN INSTALLED ON 6" CONCRETE BASE
4. PATCH & REPAIR EXISTING CMU WALL & ROOFING.

ROOM LEGEND

ROOM NO.	DESCRIPTION
104	STAFF OFFICE

PLAN LEGEND

SHADED AREA INDICATES EXTENT OF NEW CONCRETE POOL DECK

PERMIT SET

PLANS APPROVED
ARCHITECTURAL
Building & Safety Dept.
City of Las Vegas, Nevada

DJW APR 2 1 2009

Does Not Include Electrical, Plumbing, Mechanical, Residential or Off-Site Improvements Make No Change Without Approval Plan Is Not a Permit to Violate Any Ordinance

REVISIONS

CONSULTANT

SH ARCHITECTURE
7373 Peak Drive Suite 250 Las Vegas Nevada 89128
ph 702.363.2222 fax 702.363.6060 www.sh-architecture.com

CITY OF LAS VEGAS
PAVILION POOL COVER
101 SOUTH PAVILION CENTER DRIVE
LAS VEGAS, NEVADA 89144
EXISTING FLOOR PLAN

STAMP

CURT JOHN CARLSON
REGISTERED
No. 3448
ARCHITECT
STATE OF NEVADA
MAR 2 6 2009

OWNER: CITY OF LAS VEGAS
DEPARTMENT OF PUBLIC WORKS
ARCHITECTURAL SERVICES

400 EAST STEWART AVENUE
LAS VEGAS, NEVADA 89101
PHONE: (702) 229-6535
FAX: (702) 384-4846
TDD: (702) 386-9108

DRAWN	MAP/JW
FILE	A2.11
DATE	03-26-09
SCALE	1/8"=1'-0"
BID NO	07-15341.05
CLV DWG NO	107V3596-2
SHT NO	A2.11

REVISED 8/27/03

DRAWINGS AS INSTRUMENTS OF SERVICE ARE THE PROPERTY OF THE DESIGN PROFESSIONAL WHOSE STAMP OF CERTIFICATION APPEARS ON THE DRAWINGS AND SPECIFICATIONS RETAINED BY THE CLIENT MAY BE UTILIZED ONLY FOR OCCUPYING THE PROJECT FOR WHICH THEY WERE PREPARED AND NOT FOR THE CONSTRUCTION OF ANY OTHER PROJECT IN A C 623.780

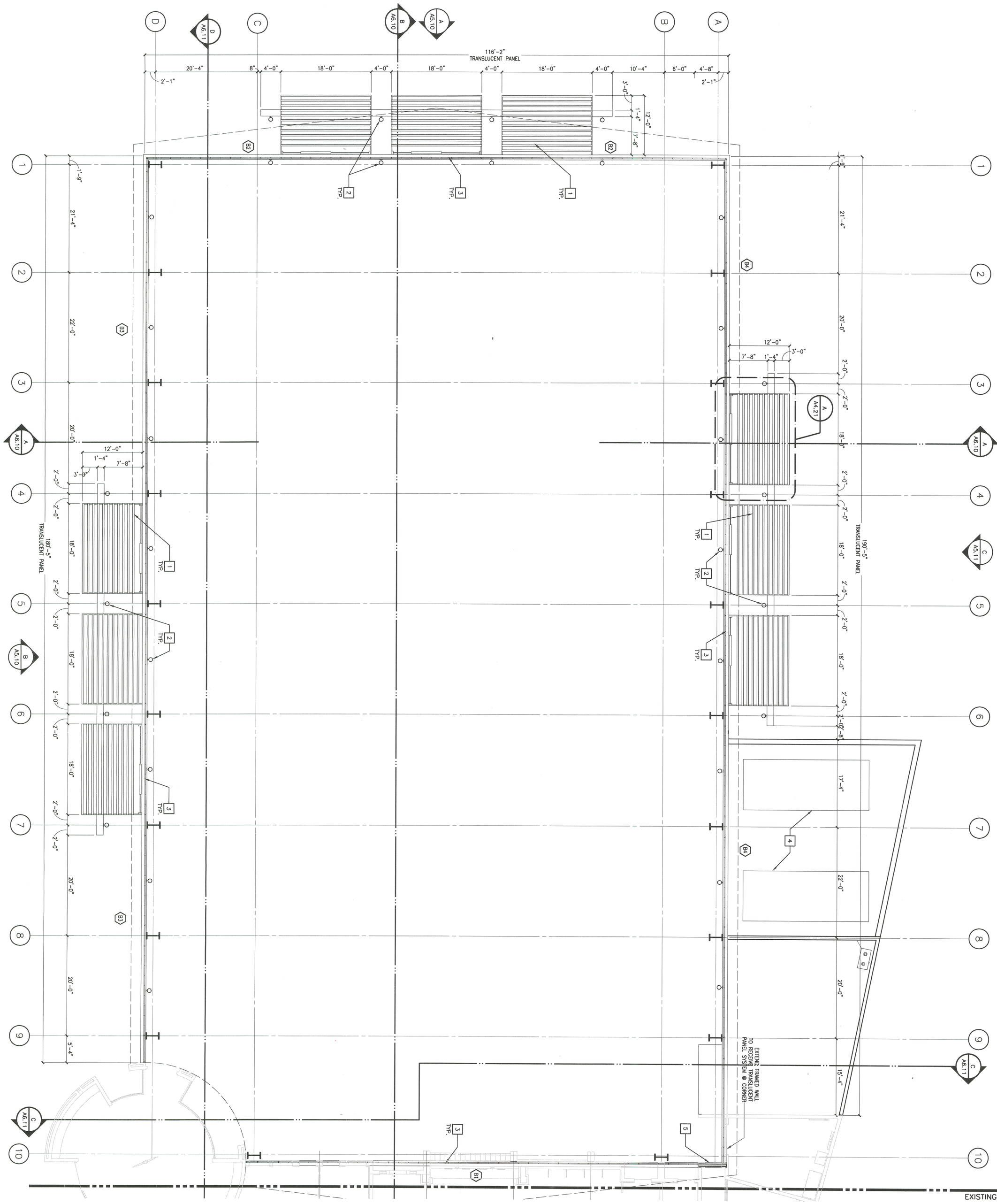

CLERESTORY AND TRELLIS PLAN

1/8" = 1'-0"

KEY NOTES

1. METAL TRELLIS
2. WALL MOUNTED LIGHT FIXTURE
3. TRANSLUCENT PANELS
4. MECHANICAL UNITS BELOW
5. NEW 6" METAL STUD WALL WITH STUCCO OVER SHEATHING

PLANS APPROVED
ARCHITECTURAL
Building & Safety Dept.
City of Las Vegas Nevada

DJW APR 2 1 2009

Does Not Include Electrical, Plumbing, Mechanical, Accessibility or Structural Improvements. Approval Of Plans Without Approval Does Not Constitute A Permit to Violate Any Ordinance

PERMIT SET

OWNER: CITY OF LAS VEGAS
DEPARTMENT OF PUBLIC WORKS
ARCHITECTURAL SERVICES

400 EAST STEWART AVENUE
LAS VEGAS, NEVADA 89101
PHONE: (702) 229-6251
FAX: (702) 384-4846
TDD: (702) 386-9108

STAMP

CURT JOHN CARLSON
No. 8443
REGISTERED
ARCHITECT
STATE OF NEVADA
MAR 2 6 2009

CITY OF LAS VEGAS
PAVILION POOL COVER
101 SOUTH PAVILION CENTER DRIVE
LAS VEGAS, NEVADA 89144

CLERESTORY PLAN

SH ARCHITECTURE
7373 Peak Drive Suite 250 Las Vegas Nevada 89128
ph 702.363.2222 fax 702.363.6060 www.sh-architecture.com

CONSULTANT

REVISIONS

SHT NO A2.20

DRAWN MAP/JW
FILE A2.20
DATE 03-26-09
SCALE 1/8"=1'-0"
BID NO 07-1534.05
CIV DWG NO 10/V3596-2

DRAWINGS AS INSTRUMENTS OF SERVICE ARE THE PROPERTY OF THE DESIGN PROFESSIONAL WHOSE STAMP OF CERTIFICATION APPEARS ON THE DRAWINGS AND SPECIFICATIONS ANY USE OR REPRODUCTION IN WHOLE OR IN PART WITHOUT WRITTEN CONSENT IS STRICTLY PROHIBITED COPIES OF THE DRAWINGS AND SPECIFICATIONS RETAINED BY THE CLIENT MAY BE UTILIZED ONLY FOR OCCUPYING THE PROJECT FOR WHICH THEY WERE PREPARED AND NOT FOR THE CONSTRUCTION OF ANY OTHER PROJECT N A C 623.780

REVISED 8/27/03

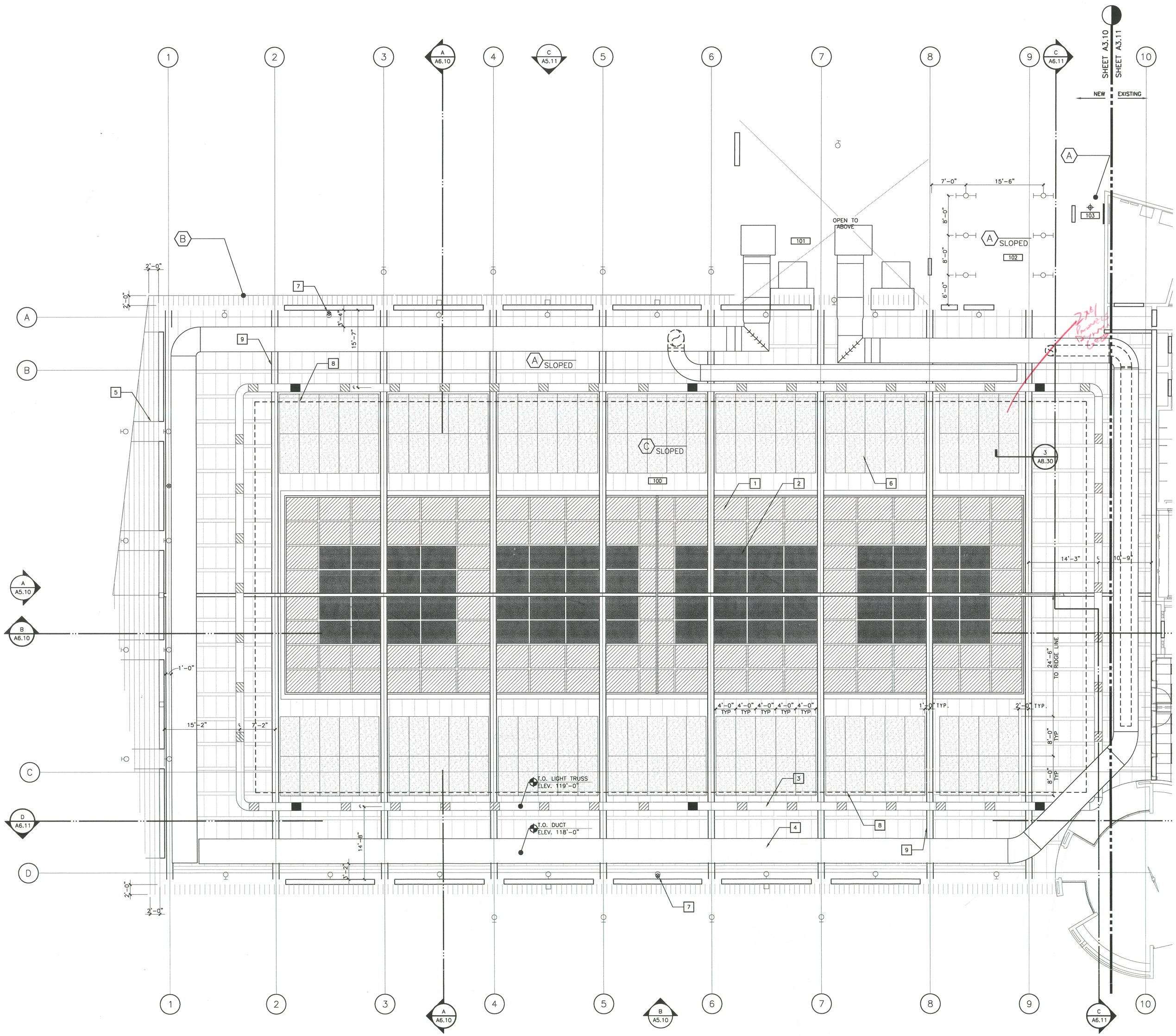

SHEET NOTES

A. SEE ELECTRICAL PLANS FOR LIGHT FIXTURE CALLOUTS
B. SEE MECHANICAL PLANS FOR DUCT INFORMATION
C. ALL PURLINS SHALL BE PAINTED PT-2.
D. SEE A2.10 FOR FINISH LEGEND

KEY NOTES

1. TRANSLUCENT SKYLIGHT - FIXED PANEL
2. TRANSLUCENT SKYLIGHT - OPERABLE PANEL — MAXIMUM U VALUE = U 0.14 PER CONSULTANT COMPLIANCE REPORT
3. LIGHT TRUSS PER ELECTRICAL DRAWING
4. MECHANICAL DUCT PER MECHANICAL DRAWING, PAINT (PT-3)
5. PROVIDE JOINTS IN SOFFIT LINER PANELS TO ALIGN WITH OPENINGS IN ADJACENT MASONRY WALL
6. ACOUSTICAL PANELS
7. FRAME MOUNTED ILLUMINATED EXIT SIGN
8. OUTLINE OF POOL BELOW
9. PREFABRICATED STEEL STRUCTURE (PT-5)

CEILING LEGEND

SYMBOL	DESCRIPTION
A	6" INSULATED METAL PANEL (PT-2)
B	2" INSULATED METAL PANEL, FACTORY PAINTED "COOL FOREST GREEN"
C	ACOUSTICAL PANELS, FACTORY FINISHED WHITE.

CEILING FIXTURE LEGEND

SYMBOL	DESCRIPTION
	WALL MOUNTED LIGHT FIXTURE
	SURFACE MOUNTED STRIP FLUORESCENT LIGHT FIXTURE
	FRAME MOUNTED ILLUMINATED EXIT SIGN
	WALL MOUNTED LIGHT FIXTURE W/EMERGENCY BATTERY BACKUP
	LIGHTRUSS LIGHT FIXTURE
	LIGHTRUSS LIGHT FIXTURE W/EMERGENCY BATTERY BACKUP
	SURFACE MOUNTED LIGHT FIXTURE

ROOM LEGEND

100	SWIMMING POOL
101	EXTERIOR MECHANICAL ROOM
102	STORAGE
103	ELECTRICAL CLOSET
104	STAFF OFFICE

PERMIT SET

PLANS APPROVED
ARCHITECTURAL
Building & Safety Dept.
City of Las Vegas, Nevada

DATE: APR 21 2009

Does Not Include Electrical, Plumbing, Mechanical, Structural or Ordinate Improvements Make No Change Without Approval Prior to Next Permit to Violate Any Ordinance

REFLECTED CEILING PLAN
1/8" = 1'-0"

NORTH

REVISIONS

CONSULTANT

SH ARCHITECTURE
7373 Peak Drive Suite 250 Las Vegas Nevada 89128
ph 702.363.2222 fax 702.363.6060 www.sh-architecture.com

CITY OF LAS VEGAS
PAVILION POOL COVER
101 SOUTH PAVILION CENTER DRIVE
LAS VEGAS, NEVADA 89144
REFLECTED
CEILING PLAN

STAMP

CURT JOHN CARLSON
REGISTERED
No. 3443
ARCHITECT
STATE OF NEVADA
MAR 26 2009

OWNER: CITY OF LAS VEGAS
DEPARTMENT OF PUBLIC WORKS
ARCHITECTURAL SERVICES

400 EAST STEWART AVENUE
LAS VEGAS, NEVADA 89101
PHONE: (702) 229-6535
FAX: (702) 384-4846
TDD: (702) 386-9108

DRAWN	MAP/JW
FILE	A3.10
DATE	03-26-09
SCALE	1/8"=1'-0"
BID NO	07-15341.05
CLV DWG NO	107V3596-2
SHT NO	A3.10

REVISED 8/27/03

DRAWINGS AS INSTRUMENTS OF SERVICE ARE THE PROPERTY OF THE DESIGN PROFESSIONAL WHOSE STAMP OF CERTIFICATION APPEARS ON THE DRAWINGS AND SPECIFICATIONS RETAINED BY THE CLIENT MAY BE UTILIZED ONLY FOR OCCUPYING THE PROJECT FOR WHICH THEY WERE PREPARED AND NOT FOR THE CONSTRUCTION OF ANY OTHER PROJECT N A C 623.780

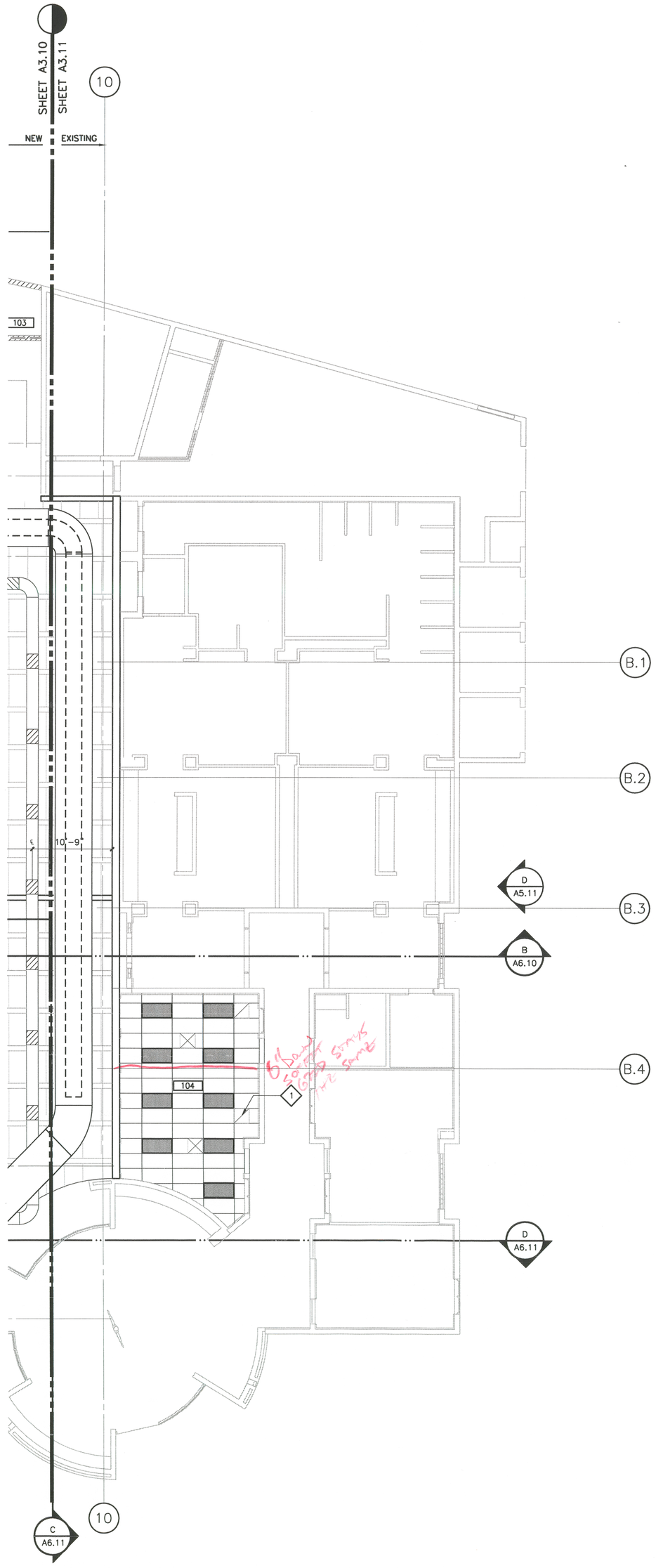

NORTH

EXISTING REFLECTED CEILING PLAN

1/8" = 1'-0"

KEY NOTES

1. REPLACE AND INSTALL ACT CEILING SYSTEM AS REMOVED PER SHEET A0.20. FURNISH NEW CEILING SYSTEM OR EQUIPMENT AS NECESSARY - SEE DETAIL 4/A8.30 FOR INSTALLATION.

ROOM LEGEND

100	SWIMMING POOL
101	EXTERIOR MECHANICAL ROOM
102	STORAGE
103	ELECTRICAL CLOSET
104	STAFF OFFICE

CEILING FIXTURE LEGEND

SYMBOL	DESCRIPTION
	INSTALL EXISTING RECESSED FLUORESCENT LIGHT FIXTURE AS REMOVED PER SHEET A0.20
	INSTALL EXISTING SUPPLY AIR DIFFUSER AS REMOVED PER SHEET A0.20
	INSTALL EXISTING RETURN AIR DIFFUSER / EXHAUST AS REMOVED PER SHEET A0.20

Maintain Existing Ceiling Grid System

Maintain existing or altered lay in ceiling grid systems per manufacturer's installation instructions, ASTM C 635, ASTM C 636, and ASCE 7, section 9.6.2.6 for high seismic areas. Note that main and cross runners may be pop-riveted at wall brackets on two adjacent sides of room only. Restrain non-pop-riveted sides against spreading by use of seismic restraints (spreader bars) within 12" of wall.

PLANS APPROVED
ARCHITECTURAL
Building & Safety Dept.
City of Las Vegas, Nevada

DATE: APR 2 1 2009

Does Not Include Electrical, Plumbing, Mechanical, Structural or Off-Site Improvements Make No Change Without Approval Plan Is Not a Permit to Violate Any Ordinance

PERMIT SET

REVISIONS

CONSULTANT

SH ARCHITECTURE
7373 Peak Drive Suite 250 Las Vegas Nevada 89128
ph 702.363.2222 fax 702.363.6060 www.sh-architecture.com

CITY OF LAS VEGAS
PAVILION POOL COVER
101 SOUTH PAVILION CENTER DRIVE
LAS VEGAS, NEVADA 89144

EXISTING REFLECTED CEILING PLAN

STAMP

CURT JOHN CARLSON
REGISTERED
No. 3443
ARCHITECT
STATE OF NEVADA
MAR 2 6 2009

OWNER: CITY OF LAS VEGAS
DEPARTMENT OF PUBLIC WORKS
ARCHITECTURAL SERVICES

400 EAST STEWART AVENUE
LAS VEGAS, NEVADA 89101
PHONE: (702) 229-6535
FAX: (702) 384-4846
TDD: (702) 386-9108

DRAWN	MAP/JW
FILE	A3.11
DATE	03-26-09
SCALE	1/8"=1'-0"
BID NO	07-15341.05
CLV DWG NO	107V3596-2
SHT NO	A3.11

REVISED 8/27/03

DRAWINGS AS INSTRUMENTS OF SERVICE ARE THE PROPERTY OF THE DESIGN PROFESSIONAL WHOSE STAMP OF CERTIFICATION APPEARS ON THE DRAWINGS AND SPECIFICATIONS ANY USE OR REPRODUCTION IN WHOLE OR IN PART WITHOUT WRITTEN CONSENT IS STRICTLY PROHIBITED COPIES OF THE DRAWINGS AND SPECIFICATIONS RETAINED BY THE CLIENT MAY BE UTILIZED ONLY FOR OCCUPYING THE PROJECT FOR WHICH THEY WERE PREPARED AND NOT FOR THE CONSTRUCTION OF ANY OTHER PROJECT N A C 623.790

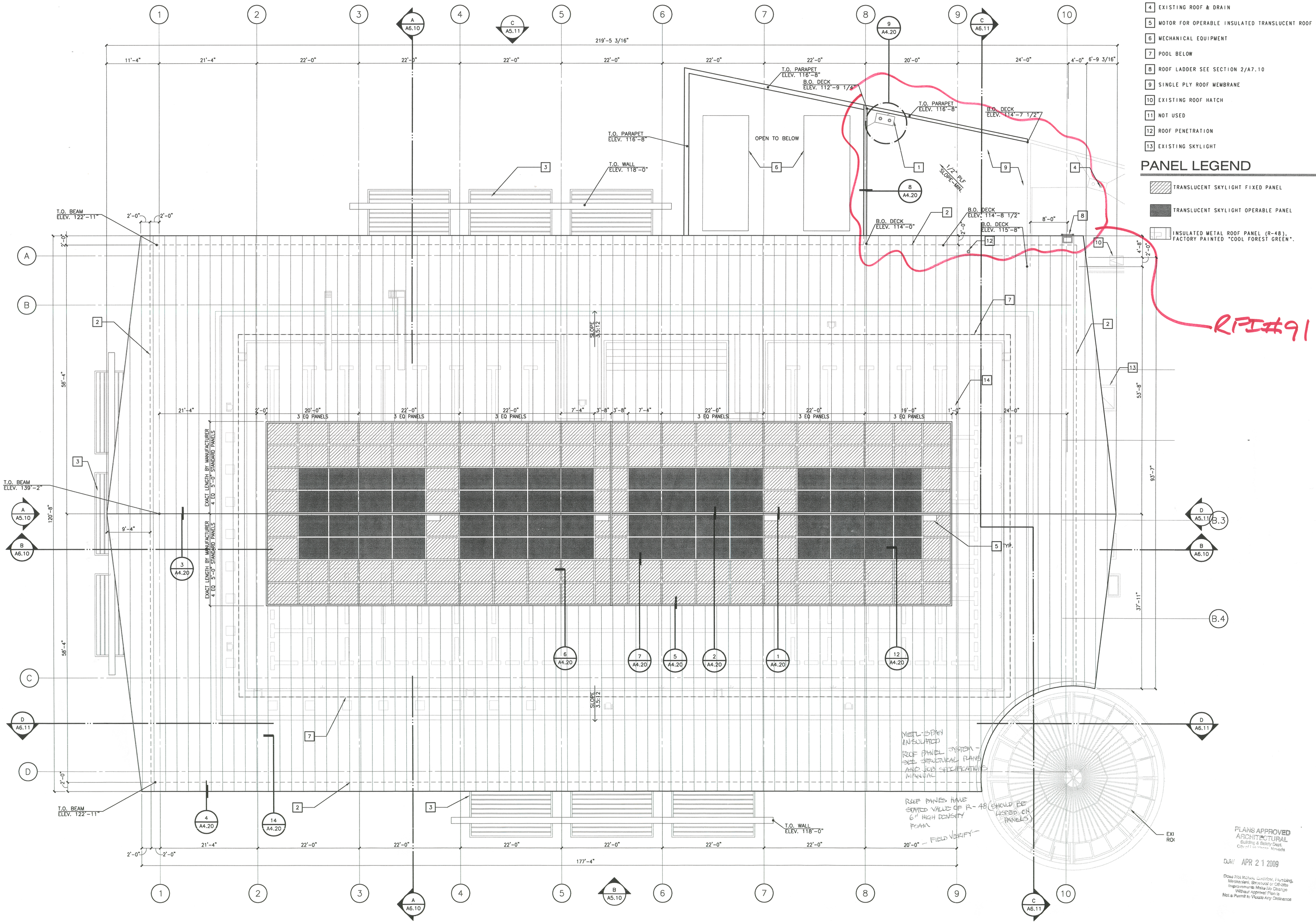

KEY NOTES

1. ROOF DRAIN
2. WALL BELOW
3. METAL TRELLIS
4. EXISTING ROOF & DRAIN
5. MOTOR FOR OPERABLE INSULATED TRANSLUCENT ROOF PANEL
6. MECHANICAL EQUIPMENT
7. POOL BELOW
8. ROOF LADDER SEE SECTION 2/A7.10
9. SINGLE PLY ROOF MEMBRANE
10. EXISTING ROOF HATCH
11. NOT USED
12. ROOF PENETRATION
13. EXISTING SKYLIGHT

PANEL LEGEND

- TRANSLUCENT SKYLIGHT FIXED PANEL
- TRANSLUCENT SKYLIGHT OPERABLE PANEL
- INSULATED METAL ROOF PANEL (R-48), FACTORY PAINTED "COOL FOREST GREEN".

ROOF PLAN

1/8" = 1'-0"

PLANS APPROVED ARCHITECTURAL Building & Safety Dept. City of Las Vegas, Nevada

DJW APR 2 1 2009

Does Not Include Electrical, Plumbing, Mechanical, Structural or Off-site Improvements Make No Change Without Approval Plan is Not a Permit to Violate Any Ordinance

PERMIT SET

REVISIONS

CONSULTANT

SH ARCHITECTURE
7373 Peak Drive Suite 250 Las Vegas Nevada 89128
ph 702.363.2222 fax 702.363.6060 www.sh-architecture.com

CITY OF LAS VEGAS
PAVILION POOL COVER
101 SOUTH PAVILION CENTER DRIVE
LAS VEGAS, NEVADA 89144

ROOF PLAN

STAMP

CURT JOHN CARLSON REGISTERED No. 3443 ARCHITECT STATE OF NEVADA
MAR 2 6 2009

OWNER: CITY OF LAS VEGAS
DEPARTMENT OF PUBLIC WORKS
ARCHITECTURAL SERVICES

400 EAST STEWART AVENUE
LAS VEGAS, NEVADA 89101
PHONE: (702) 229-6535
FAX: (702) 384-4846
TDD: (702) 386-9108

DRAWN	MAP/JW
FILE	A4.10
DATE	03-26-09
SCALE	1/8"=1'-0"
BID NO	07-15341.05
CLV DWG NO	107V3596-2
SHT NO	A4.10

REVISED 8/27/03

DRAWINGS AS INSTRUMENTS OF SERVICE ARE THE PROPERTY OF THE DESIGN PROFESSIONAL WHOSE STAMP OF CERTIFICATION APPEARS ON THE DRAWINGS AND SPECIFICATIONS RETAINED BY THE CLIENT MAY BE UTILIZED ONLY FOR OCCUPYING THE PROJECT FOR WHICH THEY WERE PREPARED AND NOT FOR THE CONSTRUCTION OF ANY OTHER PROJECT N A C 623.780

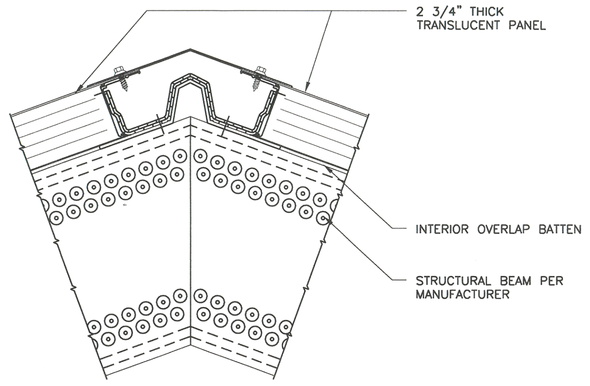

DETAIL 1
D04.20-02 3"=1'-0"

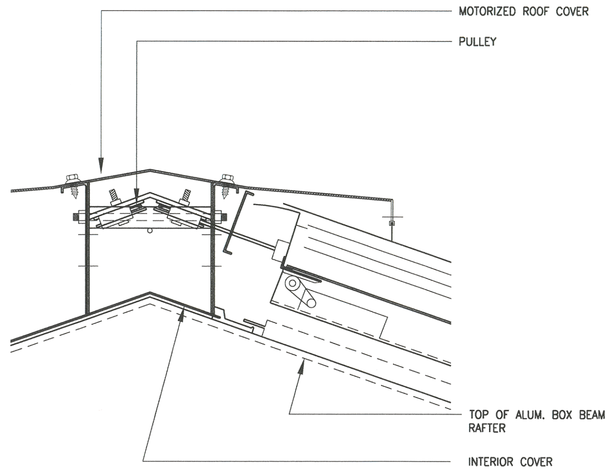

DETAIL 2
A4.20-2 3"=1'-0"

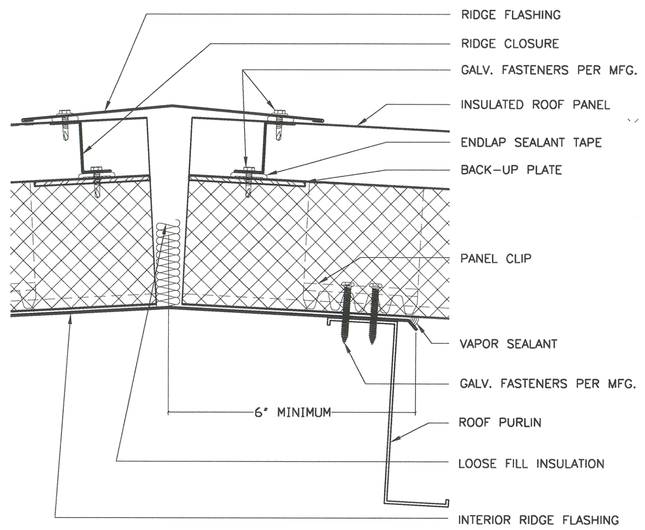

DETAIL 3
3"=1'-0"

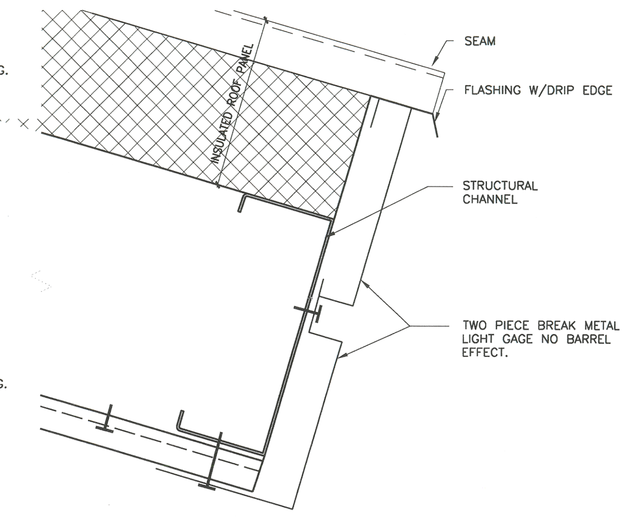

A4.20-04
DETAIL 4
3"=1'-0"

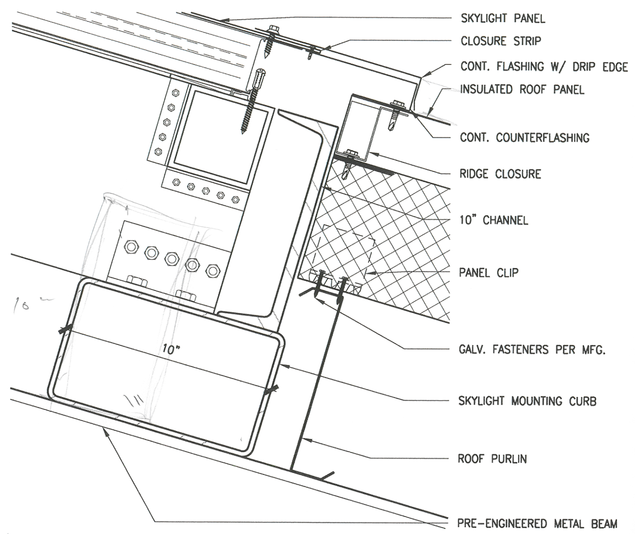

DETAIL 5
3"=1'-0"

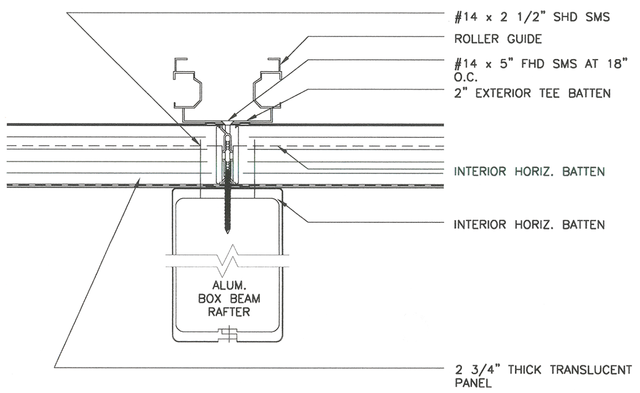

DETAIL 6
A4.20-6 3"=1'-0"

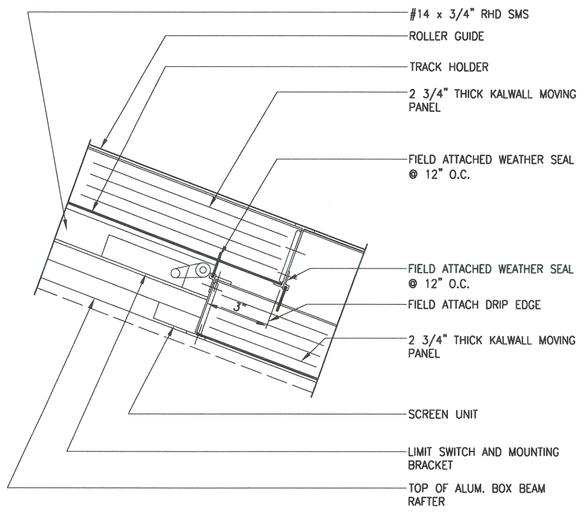

DETAIL 7
A4.20-5 3"=1'-0"

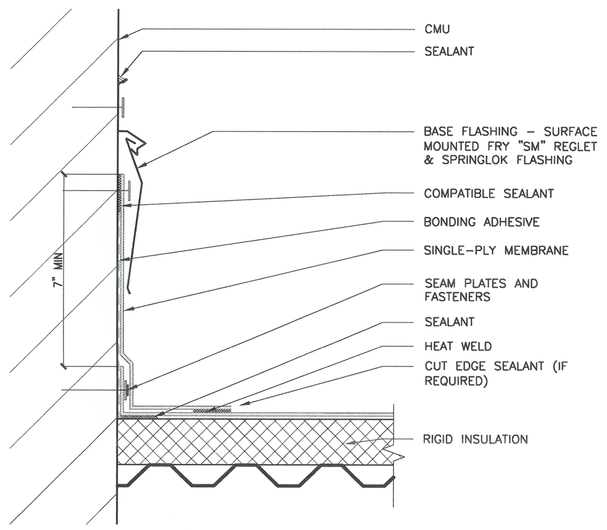

DETAIL 8
A4.20-08 3"=1'-0"

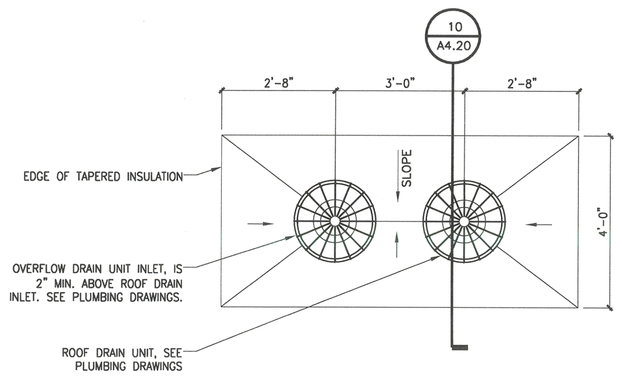

DETAIL 9
3"=1'-0"

NOTE:
1) SINGLE-PLY MEMBRANE FIELD PLIES METAL FLASHING AND STRIPPING PLY ALL EXTENDED UNDER CLAMPING RING, 1/2" MIN.
2) ALL BOLTS MUST BE PRESENT AND SECURE
3) NO SEAMS ARE PERMITTED TO TUN IN DRAIN AREA, IF A SEAM IS PRESENT IN BOWL OR SUMP AREA, A TARGET PATCH MUST BE INSTALLED

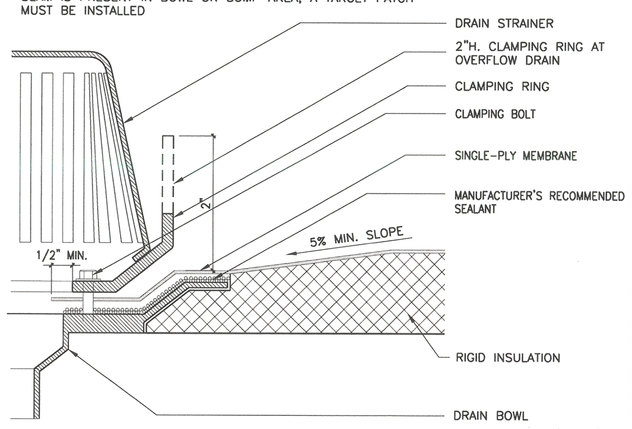

A4.20-13
DETAIL 10
3"=1'-0"

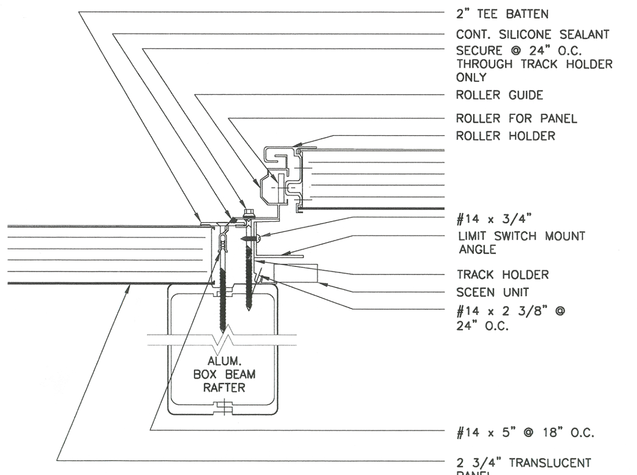

DETAIL 11
A4.20-11 3"=1'-0"

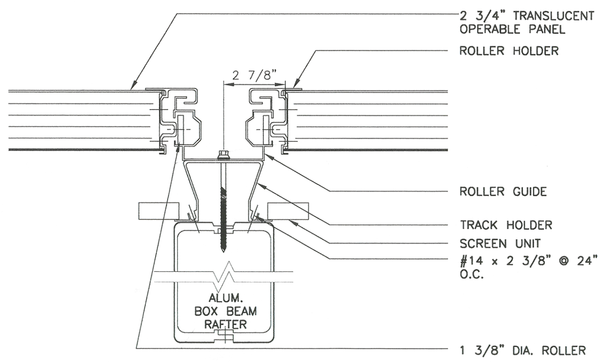

DETAIL 12
A4.20-12 3"=1'-0"

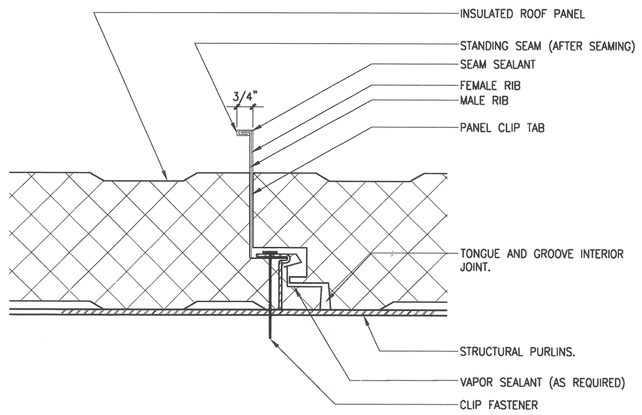

DETAIL 14
3"= 1'-0"

PLANS APPROVED
ARCHITECTURAL
Building & Safety Dept.
City of Las Vegas, Nevada

DJW APR 21 2009

Does Not Include Electrical, Plumbing, Mechanical, Structural or Civil Improvements Make No Change Without Approved Plans Is Not a Permit to Violate Any Ordinance

REVISIONS

CONSULTANT

SH ARCHITECTURE
7373 Peak Drive Suite 250 Las Vegas, Nevada 89128
ph 702.243.2222 fax 702.243.6060 www.sh-architecture.com

CITY OF LAS VEGAS
PAVILION POOL COVER
101 SOUTH PAVILION CENTER DRIVE
LAS VEGAS, NEVADA 89144

ROOF DETAILS

PERMIT SET

STAMP

CURT JOHN CARLSON REGISTERED No. 3449 ARCHITECT STATE OF NEVADA

MAR 26 2009

OWNER: CITY OF LAS VEGAS
DEPARTMENT OF PUBLIC WORKS
ARCHITECTURAL SERVICES

400 EAST STEWART AVENUE
LAS VEGAS, NEVADA 89101
PHONE: (702) 229-6535
FAX: (702) 384-4846
TDD: (702) 386-9108

DRAWN	MAP/JW
FILE	A4.20
DATE	03-26-09
SCALE	VARIES
BID NO	07-15341.05
CLV DWG NO	107V3596-2
SHT NO	A4.20

REVISED 8/27/03

DRAWINGS AS INSTRUMENTS OF SERVICE ARE THE PROPERTY OF THE DESIGN PROFESSIONAL WHOSE STAMP OF CERTIFICATION APPEARS ON THE DRAWINGS AND SPECIFICATIONS AND SHALL NOT BE USED BY THE CLIENT MAY BE UTILIZED ONLY FOR OCCUPYING THE PROJECT FOR WHICH THEY WERE PREPARED AND NOT FOR THE CONSTRUCTION OF ANY OTHER PROJECT N.A.G. #23,790
ANY USE OR REPRODUCTION IN WHOLE OR IN PART WITHOUT WRITTEN CONSENT IS STRICTLY PROHIBITED COPIES OF THE DRAWINGS AND SPECIFICATIONS RETAINED BY THE CLIENT

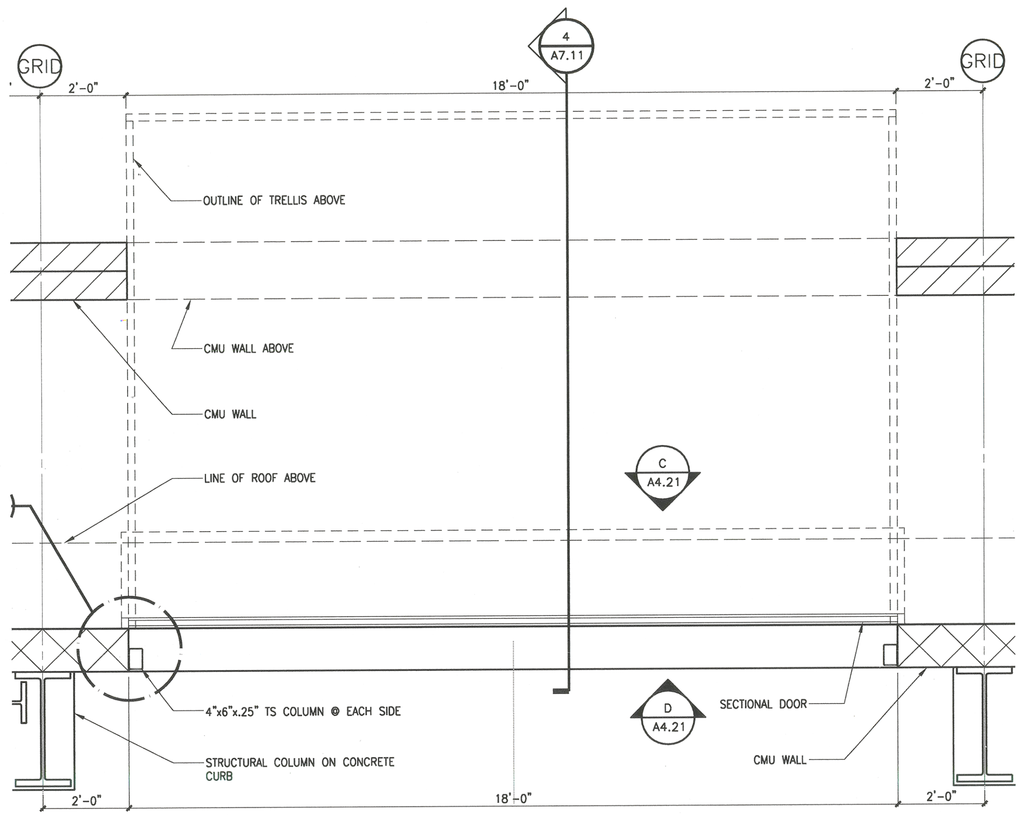

TYPICAL TRELLIS FLOOR PLAN (A)
1/2" = 1'-0"

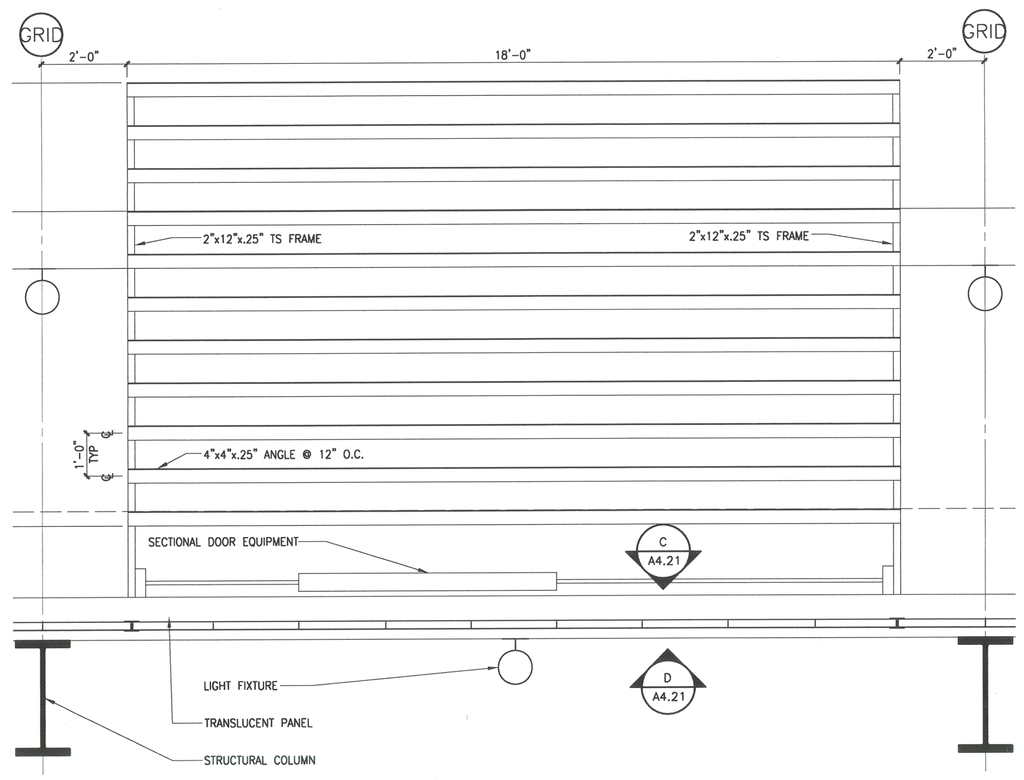

TYPICAL TRELLIS ROOF PLAN (B)
1/2" = 1'-0"

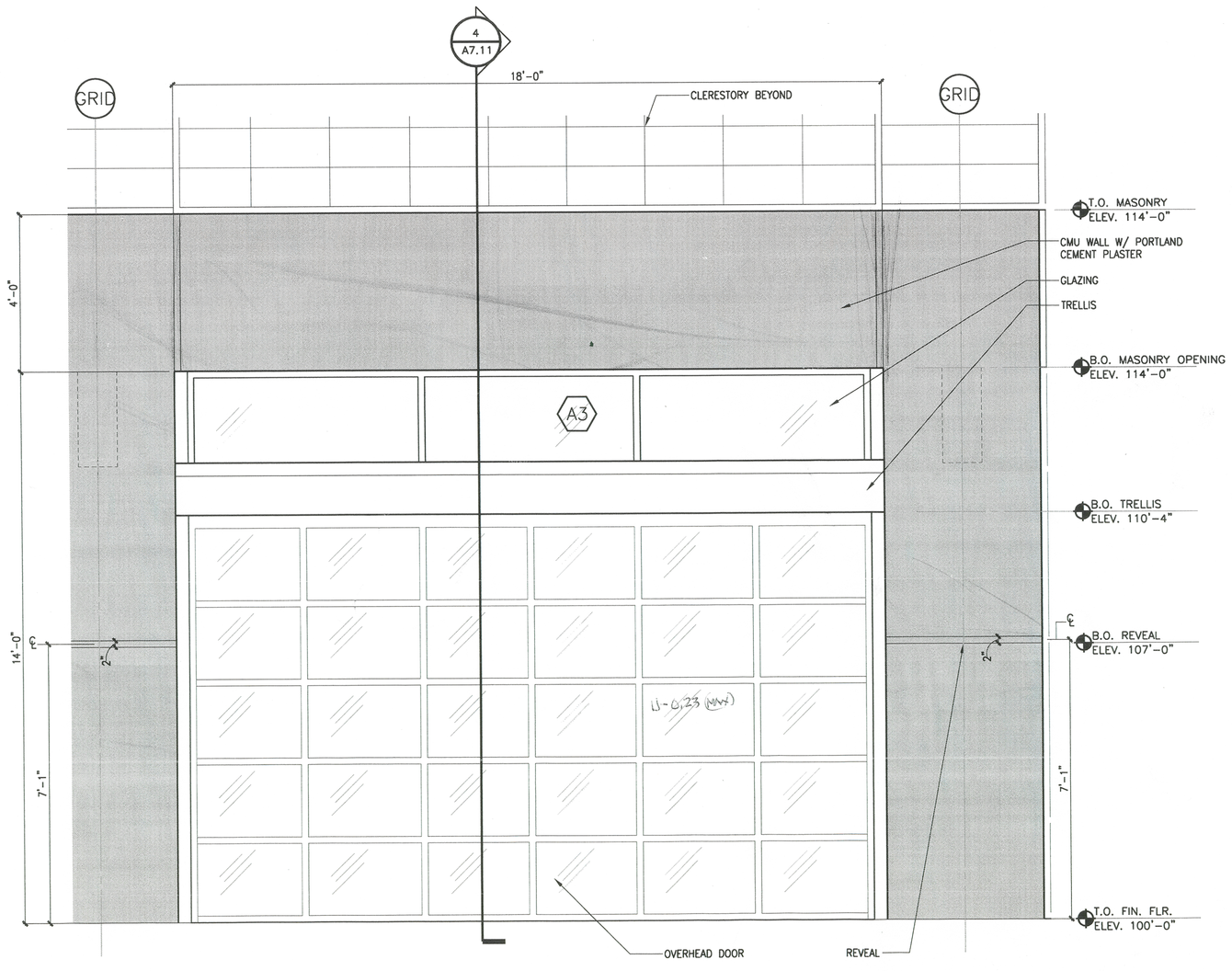

TYPICAL EXTERIOR ELEVATION (C)
1/2" = 1'-0"

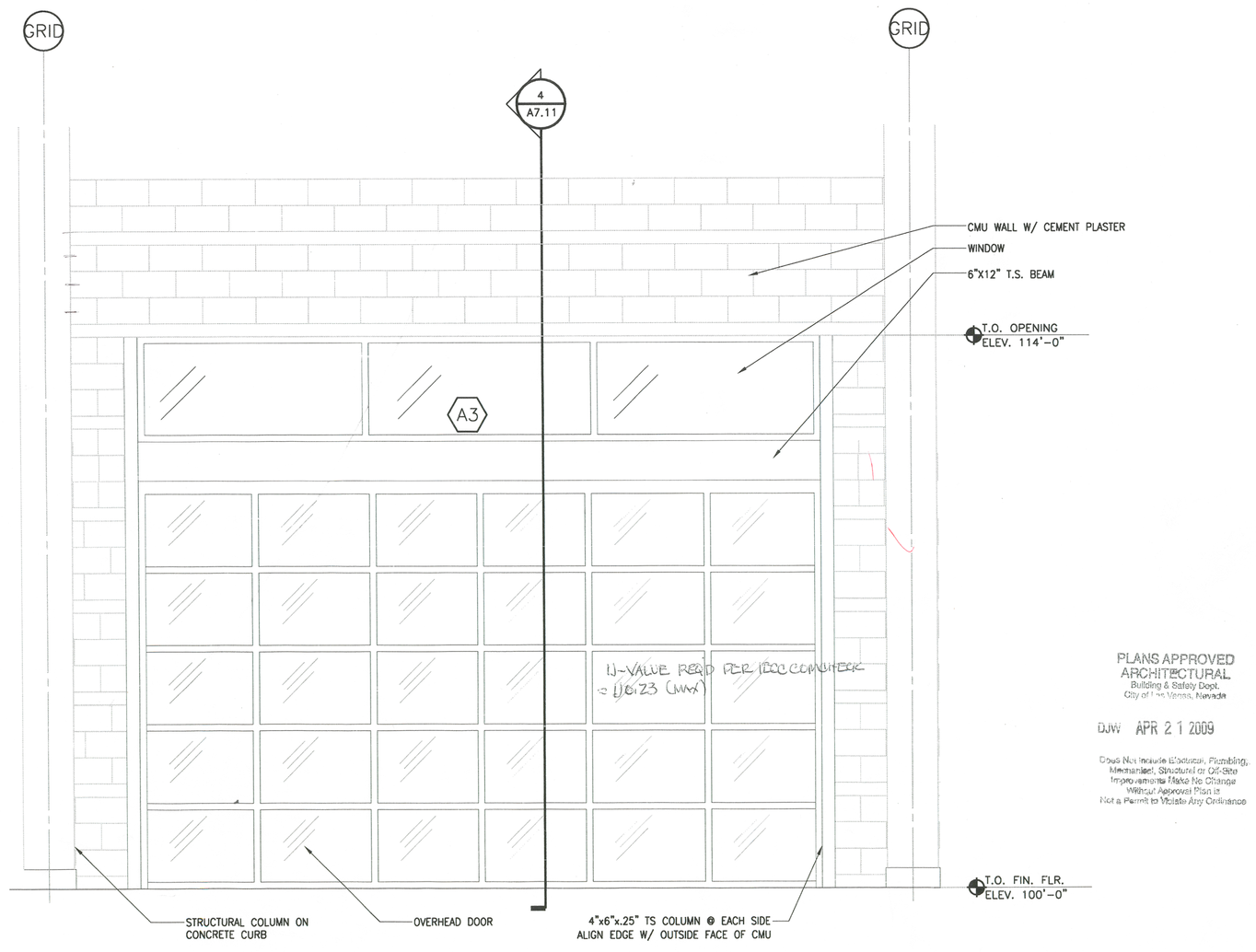

TYPICAL INTERIOR ELEVATION (D)
1/2" = 1'-0"

PLANS APPROVED
ARCHITECTURAL
Building & Safety Dept.
City of Las Vegas, Nevada

DJW APR 2 1 2009

Does Not Include Electrical, Plumbing, Mechanical, Structural or Off-Site Improvements Make No Change Without Approved Plan or Not a Permit to Waste Any Ordinance

PERMIT SET

REVISIONS

CONSULTANT

SH ARCHITECTURE
7373 Peak Drive Suite 250 Las Vegas Nevada 89128
ph 702.363.2222 fax 702.363.6040
www.sh-architecture.com

CITY OF LAS VEGAS
PAVILION POOL COVER
101 SOUTH PAVILION CENTER DRIVE
LAS VEGAS, NEVADA 89144
TRELLIS PLAN
AND DETAILS

STAMP

KURT JOHN CARLSON
REGISTERED
No. 3443
ARCHITECT
STATE OF NEVADA
MAR 2 6 2009

OWNER: CITY OF LAS VEGAS
DEPARTMENT OF PUBLIC WORKS
ARCHITECTURAL SERVICES

400 EAST STEWART AVENUE
LAS VEGAS, NEVADA 89101
PHONE: (702) 229-6335
FAX: (702) 384-4846
TDD: (702) 386-9108

DRAWN	MAP/JW
FILE	A4.20
DATE	03-26-09
SCALE	1/2"=1'-0"
BID NO	07-15341.05
CV DWG NO	107V3596-2
SHT NO	A4.21

REVISED 8/27/09

DRAWINGS AS INSTRUMENTS OF SERVICE ARE THE PROPERTY OF THE DESIGN PROFESSIONAL WHOSE STAMP OF CERTIFICATION APPEARS ON THE DRAWINGS AND SPECIFICATIONS ANY USE OR REPRODUCTION IN WHOLE OR IN PART WITHOUT WRITTEN CONSENT IS STRICTLY PROHIBITED COPIES OF THE DRAWINGS AND SPECIFICATIONS RETAINED BY THE CLIENT MAY BE UTILIZED ONLY FOR OCCUPYING THE PROJECT FOR WHICH THEY WERE PREPARED AND NOT FOR THE CONSTRUCTION OF ANY OTHER PROJECT N A C 623.780

SHEET NOTES

A. ALL PRE-MANUFACTURED METAL PANELS SHALL BE PAINTED "COOL FOREST GREEN" ON ON ALL EXPOSED EXTERIOR FACES, INCLUDING ROOF PANELS, FASCIA PANELS AND SOFFIT PANELS.

B. NOT ALL KEY NOTES MAY BE USED ON THIS SHEET

C. SEE A2.10 FOR FINISH LEGEND

KEY NOTES

1. CMU WALL - REFER TO DETAIL 5.10-1 FOR PATTERN
2. CEMENT PLASTER
4. METAL TRELLIS PAINTED PT-3
5. EXISTING BUILDING
6. OVERHEAD SECTIONAL DOOR
7. ALUMINUM STOREFRONT/ GLAZING
8. TRANSLUCENT OPERABLE PANEL
9. TRANSLUCENT PANEL
10. EXTERIOR WALL SCONCE; TOP OF LIGHT TO BE AT 14'-0"
11. REVEAL - FRY REGLET PCS-375-75 - 18/A8.30
14. CAMERA
16. NEW ROOF LADDER. SEE DETAIL 16/A4.20
17. OPERABLE TRANSLUCENT SKYLIGHT MOTOR

ELEVATION LEGEND

CEMENT PLASTER PAINTED PT-12

CEMENT PLASTER PAINTED PT-10

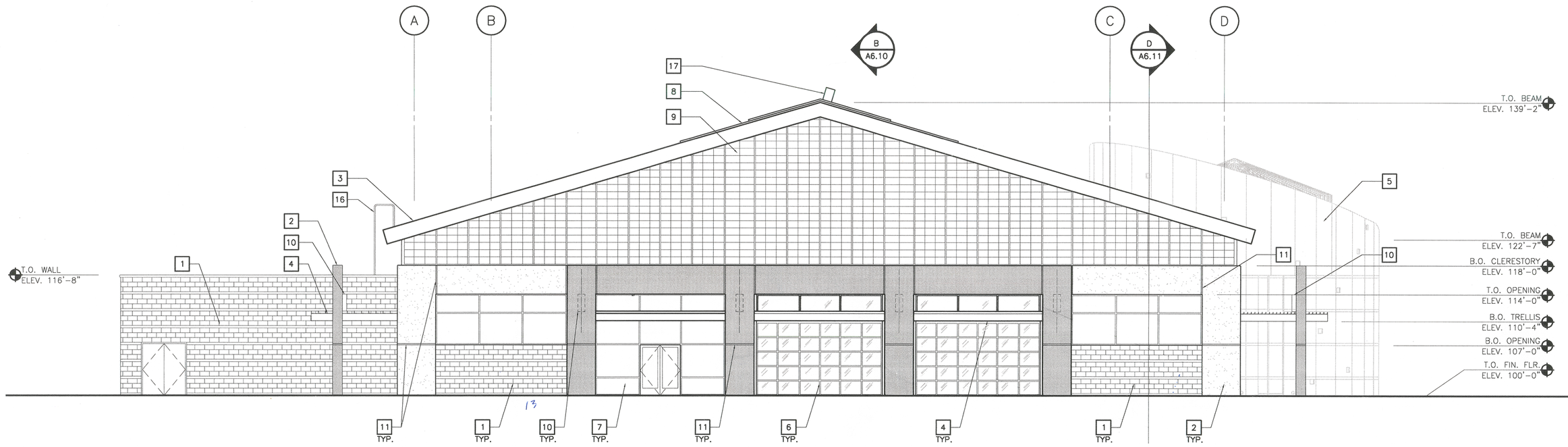

SOUTH

EXTERIOR ELEVATION (A)
1/8" = 1'-0"

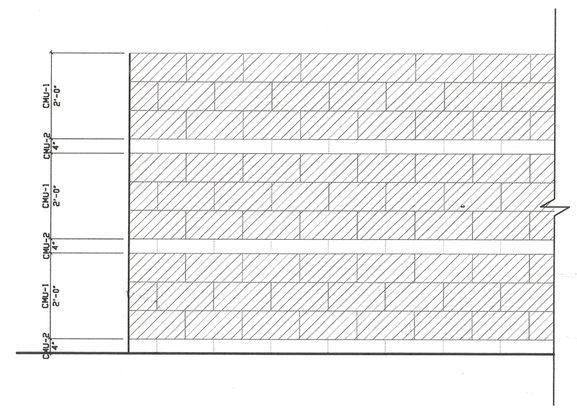

ENLARGED CMU ELEVATION (1)
1/2" = 1'-0"

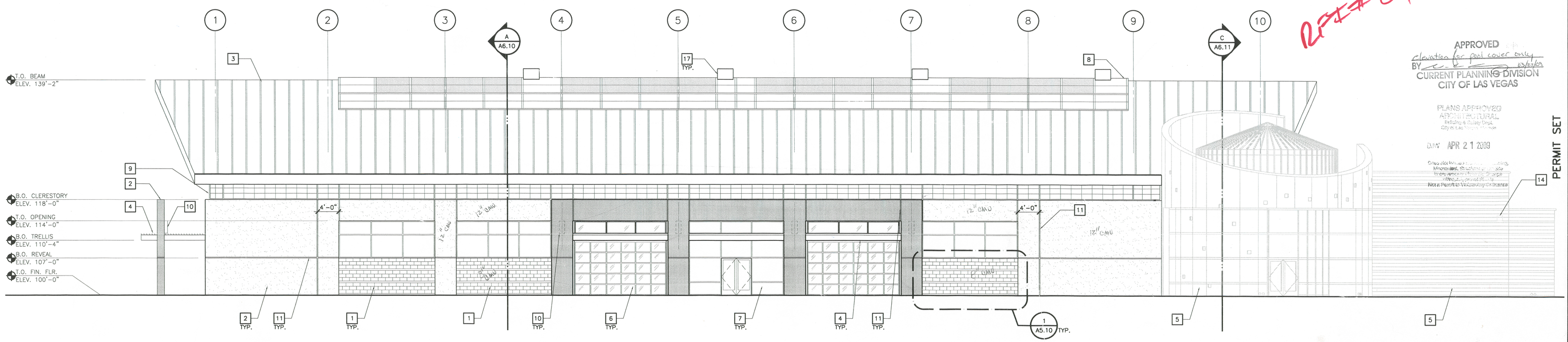

EAST

EXTERIOR ELEVATION (B)
1/8" = 1'-0"

RFI # 84

APPROVED
elevation for pool cover only
BY [signature] 03/27/09
CURRENT PLANNING DIVISION
CITY OF LAS VEGAS

PLANS APPROVED
ARCHITECTURAL
Building & Safety Dept.
City of Las Vegas, Nevada

DATE APR 21 2009

Not a Permit to Violate Any Ordinance

PERMIT SET

REVISIONS

CONSULTANT

SH ARCHITECTURE
7373 Peak Drive Suite 250 Las Vegas Nevada 89128
ph 702.363.2222 fax 702.363.6060 www.sh-architecture.com

CITY OF LAS VEGAS
PAVILION POOL COVER
101 SOUTH PAVILION CENTER DRIVE
LAS VEGAS, NEVADA 89144

EXTERIOR ELEVATIONS

STAMP

CURT JOHN CARLSON
REGISTERED
No. 3443
ARCHITECT
STATE OF NEVADA
MAR 26 2009

OWNER: CITY OF LAS VEGAS
DEPARTMENT OF PUBLIC WORKS
ARCHITECTURAL SERVICES

400 EAST STEWART AVENUE
LAS VEGAS, NEVADA 89101
PHONE: (702) 229-6535
FAX: (702) 384-4846
TDD: (702) 386-9108

DRAWN	MAP/JW
FILE	A5.10
DATE	03-26-09
SCALE	VARIES
BID NO	07-15341.05
CLV DWG NO	107V3596-2
SHT NO	A5.10

DRAWINGS AS INSTRUMENTS OF SERVICE ARE THE PROPERTY OF THE DESIGN PROFESSIONAL WHOSE STAMP OF CERTIFICATION APPEARS ON THE DRAWINGS AND SPECIFICATIONS RETAINED BY THE CLIENT MAY BE UTILIZED ONLY FOR OCCUPYING THE PROJECT FOR WHICH THEY WERE PREPARED AND NOT FOR THE CONSTRUCTION OF ANY OTHER PROJECT N.A.C. 623.780

REVISED 8/27/03

SHEET NOTES

A. ALL PRE-MANUFACTURED METAL PANELS SHALL BE PAINTED "COOL FOREST GREEN" ON ON ALL EXPOSED EXTERIOR FACES, INCLUDING ROOF PANELS, FASCIA PANELS AND SOFFIT PANELS.

B. SEE A2.10 FOR FINISH LEGEND

RFI #101

KEY NOTES

1. CMU WALL - REFER TO DETAIL 5.10-1 FOR PATTERN
2. CEMENT PLASTER
3. INSULATED ROOF PANELS - BY PRE-ENGINEERED BLDG MFR.
4. METAL TRELLIS PAINTED PT-3
5. EXISTING BUILDING
6. OVERHEAD SECTIONAL DOOR
7. ALUMINUM STOREFRONT/ GLAZING
8. TRANSLUCENT SKYLIGHT
9. TRANSLUCENT PANEL
10. EXTERIOR WALL SCONCE; TOP OF LIGHT TO BE AT 14'-0"
11. REVEAL - FRY REGLET PCS-375-75 - 18/A8.30
12. MECHANICAL EQUIPMENT BEYOND
13. ROOF BEYOND
14. CAMERA
15. EXISTING ROOF LADDER
16. NEW ROOF LADDER W/ INTERMEDIATE PLATFORM. SEE DETAIL 11/A8.31
17. OPERABLE TRANSLUCENT SKYLIGHT MOTOR
18. EXTERIOR ROOF DRAIN
19. 12" OPENING IN BLOCK WALL FOR DRAINAGE

ELEVATION LEGEND

- CEMENT PLASTER PAINTED PT-12
- CEMENT PLASTER PAINTED PT-10

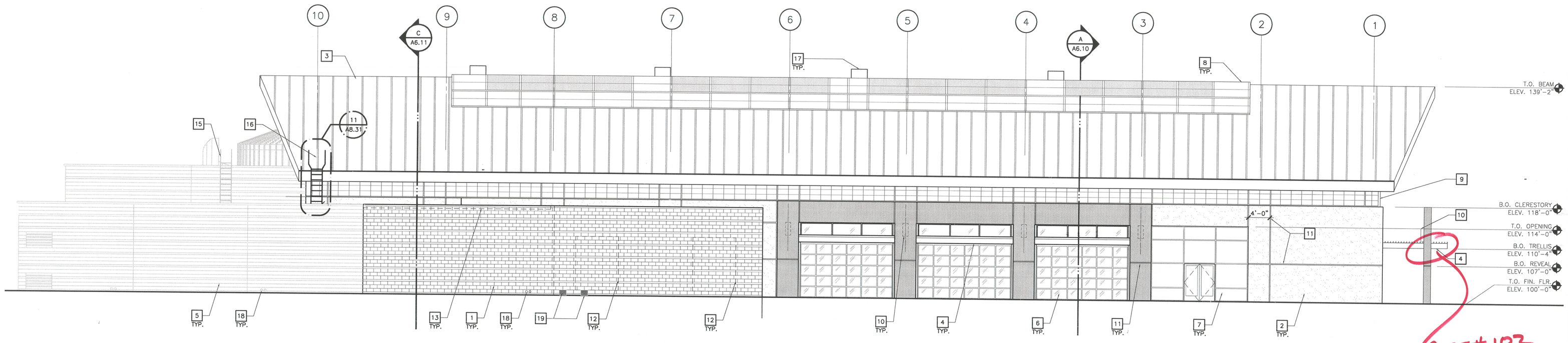

RFI #102

WEST EXTERIOR ELEVATION (C) 1/8" = 1'-0"

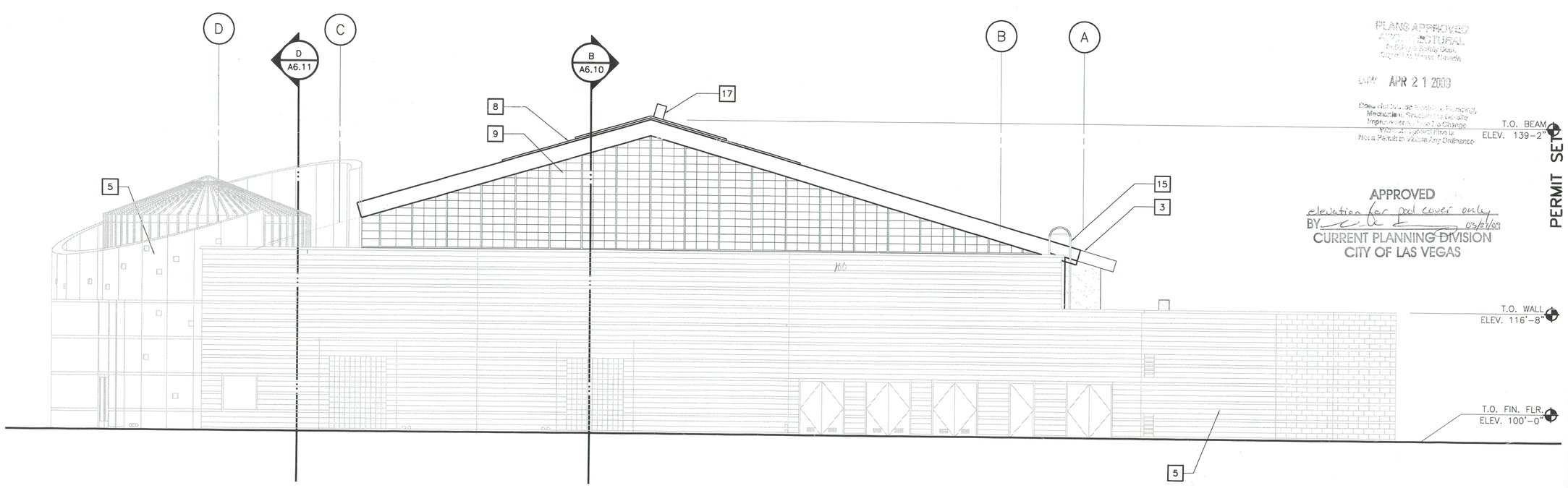

NORTH EXTERIOR ELEVATION (D) 1/8" = 1'-0"

PLANS APPROVED AS NOTED
ARCHITECTURAL
ENGINEERING
CONSTRUCTION
DATE APR 21 2009
Plans approved as noted. Permission to construct in accordance with noted plans does not grant any violation of any provisions of the Municipal Code or Uniform Codes.

APPROVED
elevation for pool cover only
BY _____ expires
CURRENT PLANNING DIVISION
CITY OF LAS VEGAS

PERMIT SET

REVISIONS

CONSULTANT

SH ARCHITECTURE
7373 Peak Drive Suite 250 Las Vegas Nevada 89128
ph: 702.363.2222 fax: 702.363.0660 www.sh-architecture.com

CITY OF LAS VEGAS
PAVILION POOL COVER
101 SOUTH PAVILION CENTER DRIVE
LAS VEGAS, NEVADA 89144
EXTERIOR ELEVATIONS

STAMP
CURT JOHN CARLSON REGISTERED No. 3448 ARCHITECT STATE OF NEVADA
MAR 26 2009

OWNER: CITY OF LAS VEGAS
DEPARTMENT OF PUBLIC WORKS
ARCHITECTURAL SERVICES
400 EAST STEWART AVENUE
LAS VEGAS, NEVADA 89101
PHONE: (702) 229-6535
FAX: (702) 384-4846
TDD: (702) 386-9108

DRAWN	MAP/JW
FILE	A5.11
DATE	03-26-09
SCALE	1/8"=1'-0"
BID NO	07-15341.05
ELV DWG NO	107V3596-2
SHT NO	A5.11

REVISED 8/27/03

PROHIBITED COPIES OF THE DRAWINGS AND SPECIFICATIONS RETAINED BY THE CLIENT MAY BE UTILIZED ONLY FOR DOCUMENTING THE PROJECT FOR WHICH THEY WERE PREPARED AND NOT FOR THE CONSTRUCTION OF ANY OTHER PROJECT. © S H ARCHITECTURE
DRAWINGS AS INSTRUMENTS OF SERVICE ARE THE PROPERTY OF THE DESIGN PROFESSIONAL WHOSE STAMP OF CERTIFICATION APPEARS ON THE DRAWINGS AND SPECIFICATIONS. ANY USE OR REPRODUCTION IN WHOLE OR IN PART WITHOUT WRITTEN CONSENT IS STRICTLY PROHIBITED.

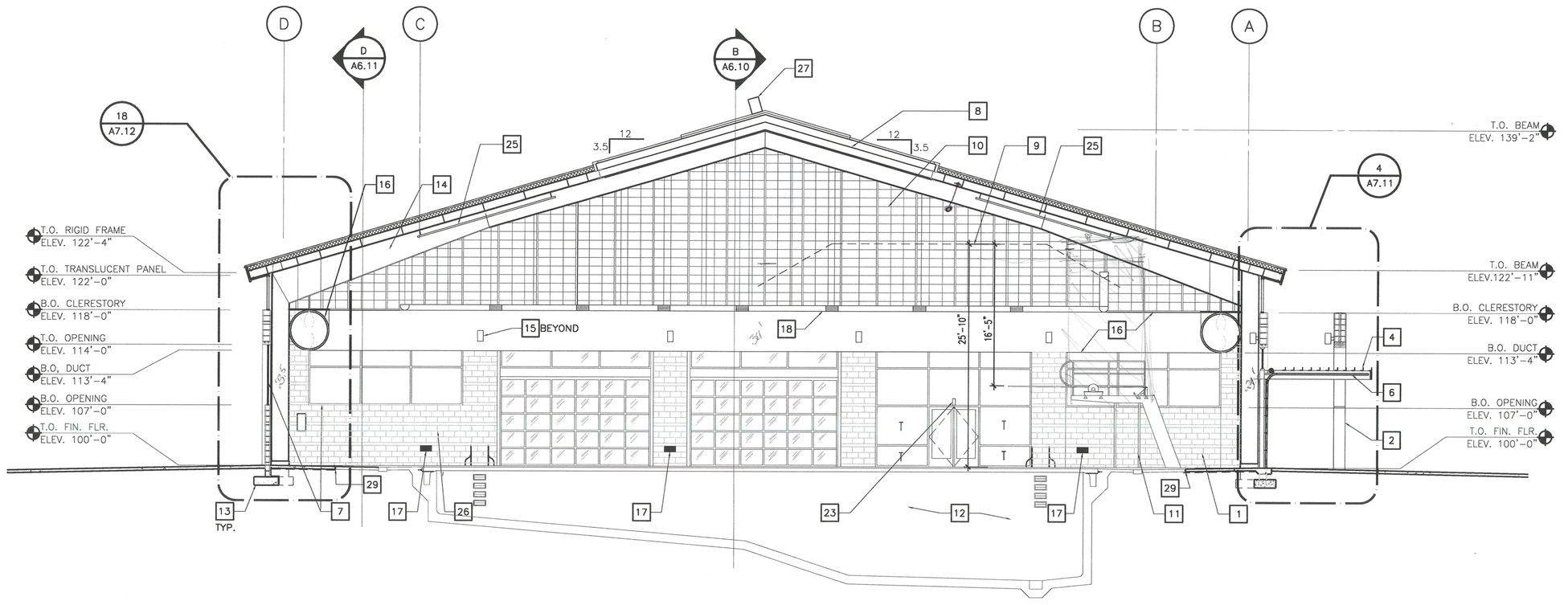

SOUTH

BUILDING SECTION (A)
1/8" = 1'-0"

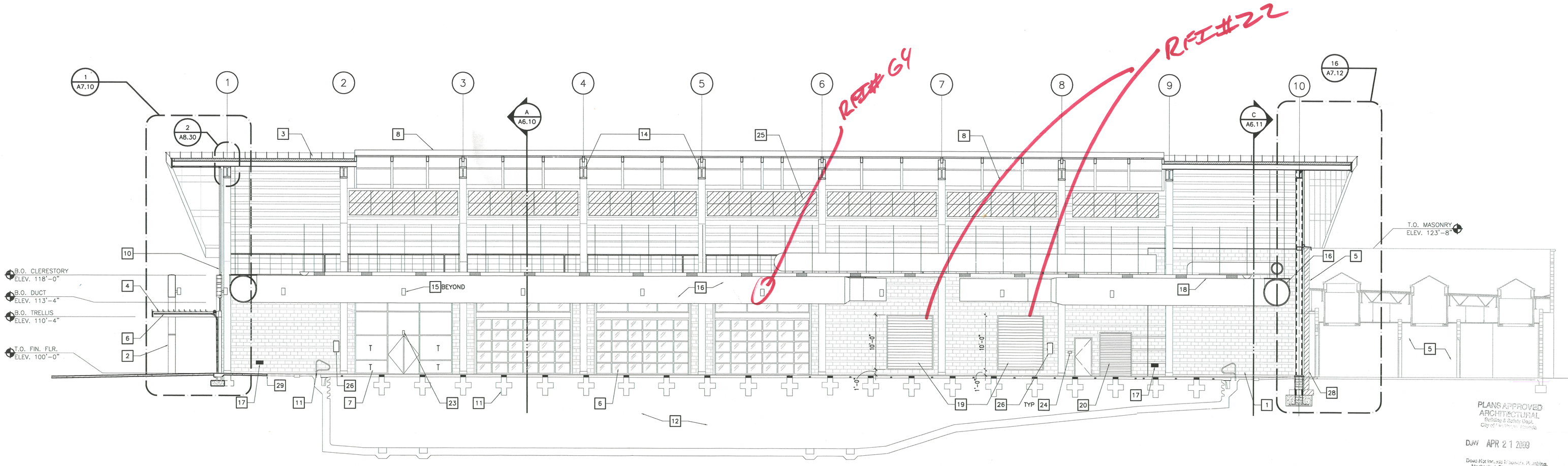

BUILDING SECTION (B)
1/8" = 1'-0"

PERMIT SET

PLANS APPROVED
ARCHITECTURAL
Building & Safety Dept.
City of Las Vegas, Nevada
DJW APR 21 2009
Does Not Include Electrical, Plumbing, Mechanical, Structural or Other Requirements Required by Code Whether Actually Shown Or Not
Not a Permit or Waiver of Any Kind

KEY NOTES

1. CMU
2. CEMENT PLASTER
3. INSULATED METAL ROOF PANEL SYSTEM
4. METAL TRELLIS PAINTED (PT-3)
5. EXISTING BUILDING
6. OVERHEAD SECTIONAL DOOR
7. ALUMINUM STOREFRONT
8. TRANSLUCENT SKYLIGHT PANEL
9. HIGH DIVE CLEARANCE LIMITS
10. TRANSLUCENT PANELS
11. EXISTING POOL EQUIPMENT - PROTECT IN PLACE
12. EXISTING POOL
13. STRUCTURAL FOOTING
14. PRE-FABRICATED METAL STRUCTURE PAINTED (PT-5)
15. INTERIOR WALL SCONCE; TOP OF LIGHT TO BE AT 15'-8"
16. MECHANICAL DUCT PAINTED (PT-3)
17. RELOCATED ELECTRIC JUNCTION BOXES FOR POOL LIGHTS
18. LIGHT TRUSS TO BE FACTORY PAINTED "PT14 LIGHT GRAY".
19. MECHANICAL LOUVER PAINTED (PT-2)
20. OVERHEAD COILING DOOR PAINTED (PT-2)
21. PAINT EXISTING WALL (PT-2)
22. PAINT EXISTING DOORS (PT-2)
23. EXIT SIGNAGE
24. ROOM IDENTIFICATION SIGNAGE
25. ACOUSTICAL PANELS
26. FIRE EXTINGUISHER CABINETS
27. OPERABLE TRANSLUCENT SKYLIGHT MOTOR - W/ COVER
28. EXISTING WALL
29. PROVIDE ½" DOWELS @ 18" O.C. DRILLED INTO EXISTING CONCRETE DECK (TYP.)

SHEET NOTES

A. SEE A2.10 FOR FINISH LEGEND
B. PROVIDE SAFETY TIE-DOWNS ON ROOF. SUBMIT SHOP DRAWINGS FOR COORDINATION.

REVISIONS

CONSULTANT

SH ARCHITECTURE
7373 Peak Drive Suite 250 Las Vegas Nevada 89128
ph 702.363.2222 fax 702.363.6060 www.sh-architecture.com

CITY OF LAS VEGAS
PAVILION POOL COVER
101 SOUTH PAVILION CENTER DRIVE
LAS VEGAS, NEVADA 89144
BUILDING SECTIONS

THESE DRAWINGS AS INSTRUMENTS OF SERVICE ARE THE PROPERTY OF THE DESIGN PROFESSIONAL WHOSE STAMP OF CERTIFICATION APPEARS ON THE DRAWINGS AND SPECIFICATIONS REMAINS BY THE CLIENT MAY BE UTILIZED ONLY FOR OCCUPYING THE PROJECT FOR WHICH THEY WERE PREPARED AND NOT FOR THE CONSTRUCTION OF ANY OTHER PROJECT IN A © 63.760
IT IS STRICTLY PROHIBITED COPIES OF THE DRAWINGS AND SPECIFICATIONS REMAINS BY THE CLIENT MAY BE UTILIZED ONLY FOR OCCUPYING THE PROJECT FOR WHICH THEY WERE PREPARED AND NOT FOR THE CONSTRUCTION OF ANY OTHER PROJECT IN A © 63.760
WITHOUT WRITTEN CONSENT IS STRICTLY PROHIBITED

STAMP
CURT JOHN CARLSON REGISTERED No. 3443 ARCHITECT STATE OF NEVADA
MAR 26 2009

OWNER: CITY OF LAS VEGAS
DEPARTMENT OF PUBLIC WORKS
ARCHITECTURAL SERVICES

400 EAST STEWART AVENUE
LAS VEGAS, NEVADA 89101
PHONE: (702) 229-6335
FAX: (702) 384-4846
TDD: (702) 386-9108

DRAWN	MAP/JW
FILE	A6.10
DATE	03-26-09
SCALE	1/8"=1'-0"
BID NO	07-15341.05
CLV DWG NO	107V3596-2
SHT NO	A6.10

REVISED 9/27/03

SHEET NOTES

A. EXISTING BUILDING SHALL BE PROTECTED DURING CONSTRUCTION. REPAIR DAMAGED AREAS UPON COMPLETION OF WORK.

B. SEE A2.10 FOR FINISH LEGEND.

KEY NOTES

1. CMU
2. CEMENT PLASTER
3. INSULATED METAL ROOF PANEL SYSTEM
4. METAL TRELLIS PAINTED (PT-3)
5. EXISTING BUILDING
6. OVERHEAD SECTIONAL DOOR
7. ALUMINUM STOREFRONT
8. TRANSLUCENT SKYLIGHT PANEL
9. HIGH DIVE CLEARANCE LIMITS
10. TRANSLUCENT PANELS
11. EXISTING POOL EQUIPMENT - PROTECT IN PLACE
12. EXISTING POOL
13. STRUCTURAL FOOTING
14. PRE-FABRICATED METAL STRUCTURE PAINTED (PT-5)
15. INTERIOR WALL SCONCE; TOP OF LIGHT TO BE AT 15'-8"
16. MECHANICAL DUCT PAINTED (PT-3)
17. RELOCATED ELECTRIC JUNCTION BOXES FOR POOL LIGHTS
18. LIGHT TRUSS TO BE FACTORY PAINTED "PT14 LIGHT GRAY".
19. MECHANICAL LOUVER PAINTED (PT-2)
20. OVERHEAD COILING DOOR PAINTED (PT-2)
21. PAINT EXISTING WALL (PT-2)
22. PAINT EXISTING DOORS (PT-2)
23. EXIT SIGNAGE
24. ROOM IDENTIFICATION SIGNAGE
25. ACOUSTICAL PANELS
26. FIRE EXTINGUISHER CABINETS

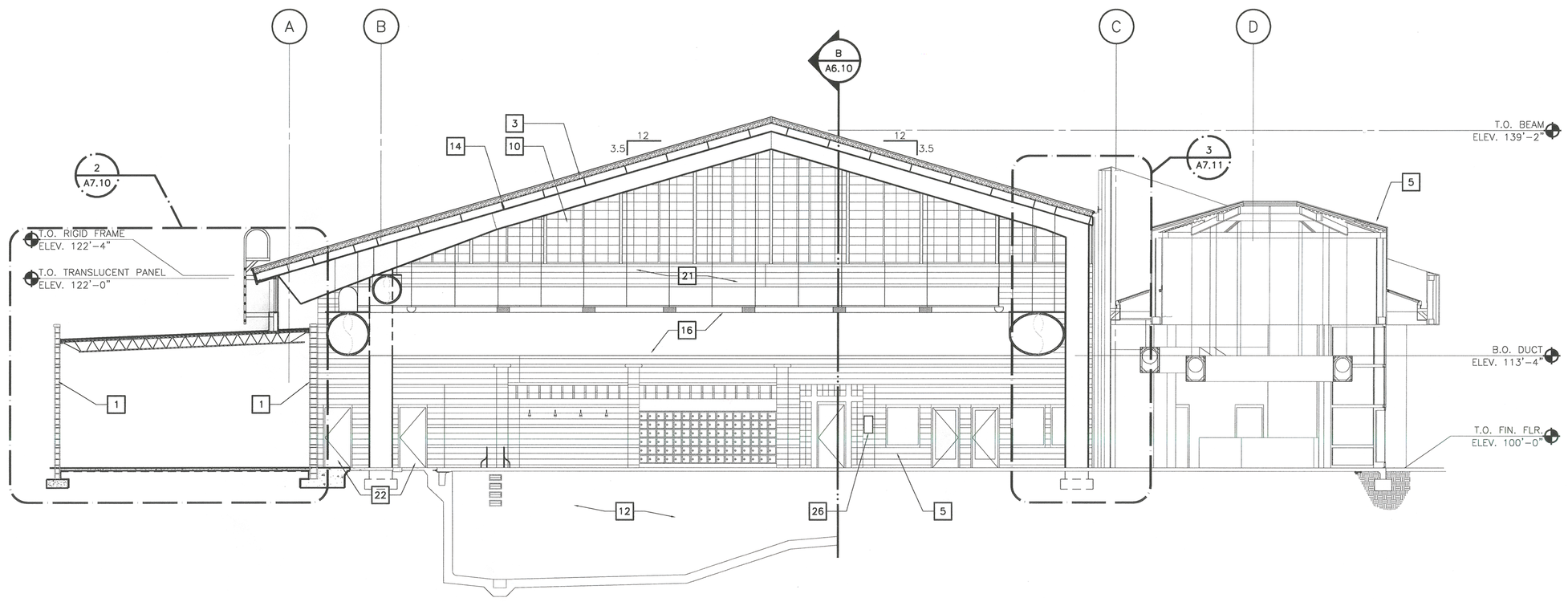

BUILDING SECTION (C)
1/8" = 1'-0"

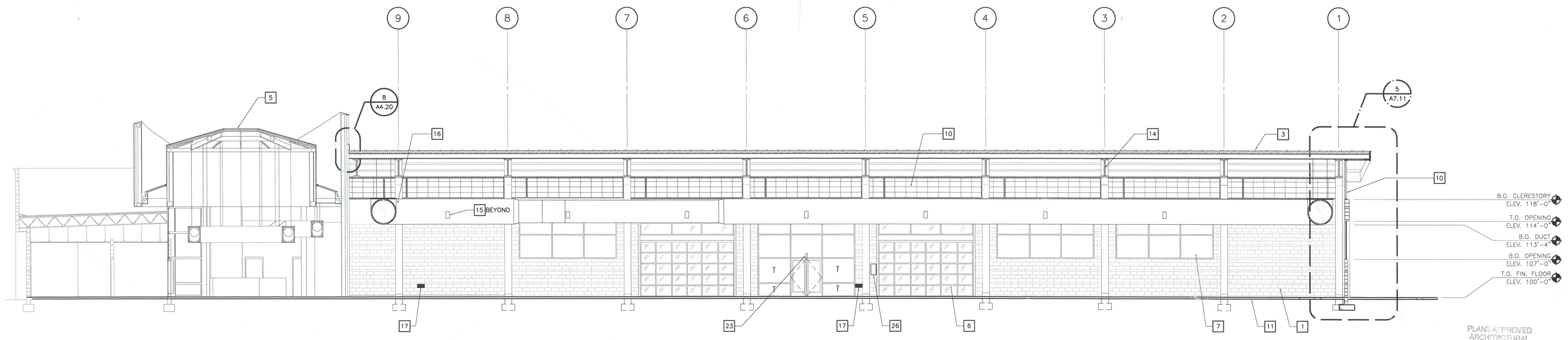

PERMIT SET

PLANS APPROVED
ARCHITECTURAL
Building & Safety Dept.
City of Las Vegas, Nevada

DJW APR 21 2009

Does Not Include Electrical, Plumbing, Mechanical, Structural or Off-Site Improvements Made To Change Without Approval Plan Is Not a Permit to Violate Any Ordinance

BUILDING SECTION (D)
1/8" = 1'-0"

REVISIONS

CONSULTANT

SH ARCHITECTURE
7373 Peak Drive Suite 250 Las Vegas Nevada 89128
ph 702.363.2222 fax 702.363.6060 www.sh-architecture.com

CITY OF LAS VEGAS
PAVILION POOL COVER
101 SOUTH PAVILION CENTER DRIVE
LAS VEGAS, NEVADA 89144

BUILDING SECTIONS

STAMP

CURT JOHN CARLSON
REGISTERED
No. 3448
ARCHITECT
STATE OF NEVADA
MAR 26 2009

OWNER: CITY OF LAS VEGAS
DEPARTMENT OF PUBLIC WORKS
ARCHITECTURAL SERVICES

400 EAST STEWART AVENUE
LAS VEGAS, NEVADA 89101
PHONE: (702) 229-6535
FAX: (702) 384-4846
TDD: (702) 386-9108

DRAWN	MAP/JW
FILE	A6.11
DATE	03-26-09
SCALE	1/8"=1'-0"
BID NO	07-15341.05
CLV DWG NO	107V3596-2
SHT NO	A6.11

DRAWINGS AS INSTRUMENTS OF SERVICE ARE THE PROPERTY OF THE DESIGN PROFESSIONAL WHOSE STAMP OF CERTIFICATION APPEARS ON THE DRAWINGS AND SPECIFICATIONS ANY USE OR REPRODUCTION IN WHOLE OR IN PART WITHOUT WRITTEN CONSENT IS STRICTLY PROHIBITED COPIES OF THE DRAWINGS AND SPECIFICATIONS RETAINED BY THE CLIENT MAY BE UTILIZED ONLY FOR OCCUPYING THE PROJECT FOR WHICH THEY WERE PREPARED AND NOT FOR THE CONSTRUCTION OF ANY OTHER PROJECT N A C 623.780

REVISED 8/27/03

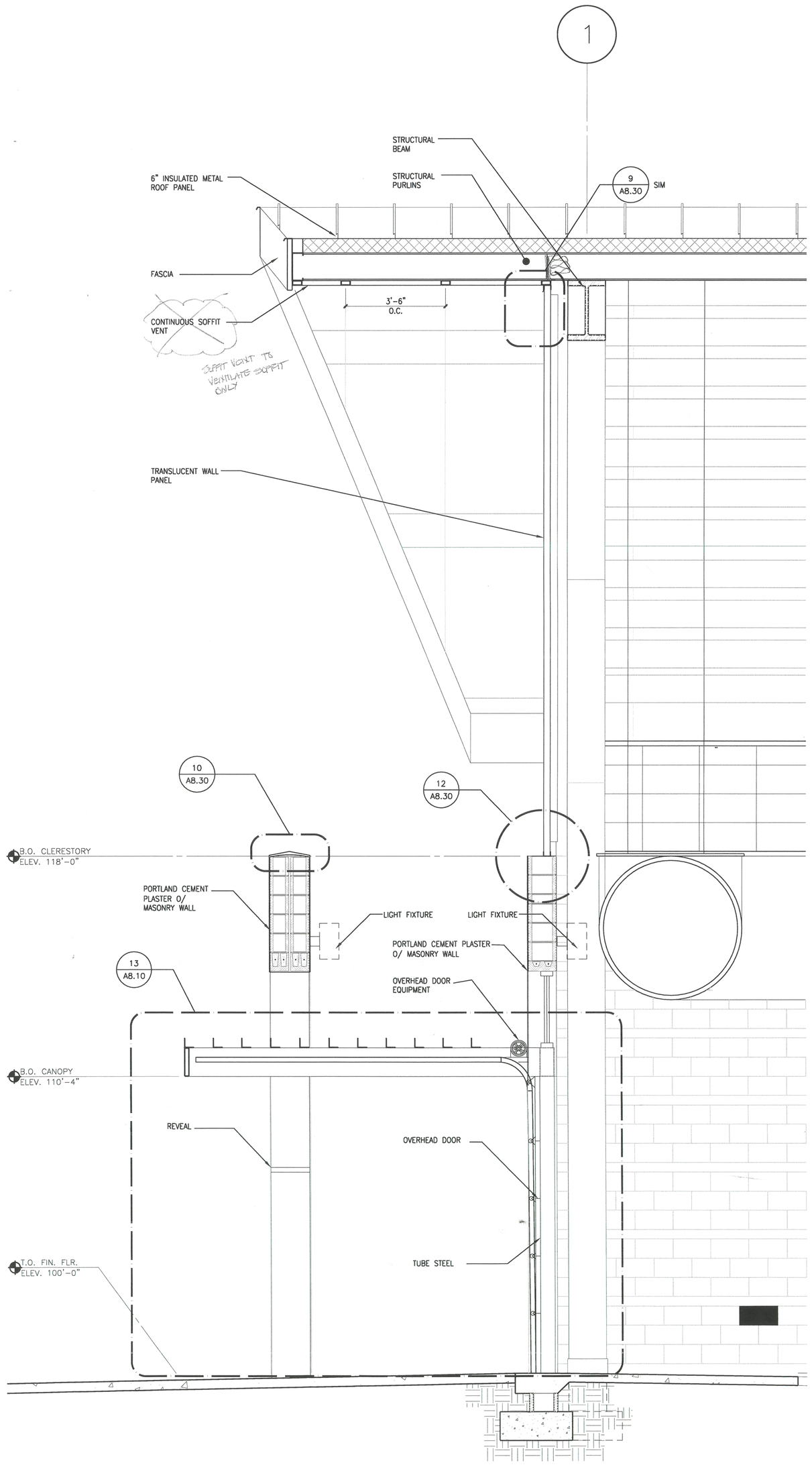

WALL SECTION 1
1/2" = 1'-0"

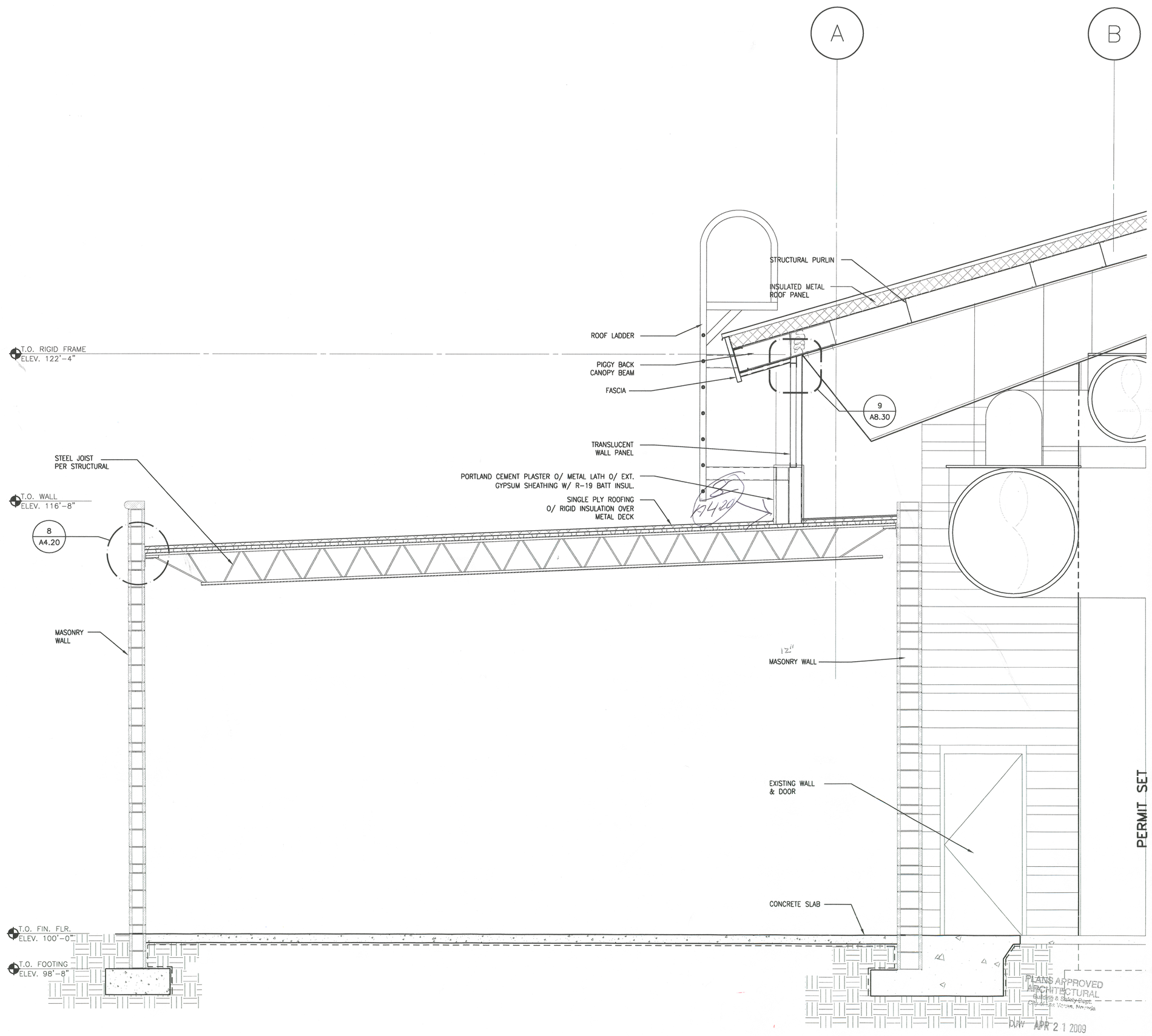

WALL SECTION 2
1/2" = 1'-0"

PERMIT SET

PLANS APPROVED
ARCHITECTURAL
CLV APR 21 2009
Does Not Include Electrical, Plumbing, Mechanical, Structural or Off-Site Improvements. Make No Changes Without Approval. Plan is Not a Permit to Violate Any Ordinance

REVISIONS

CONSULTANT

SH ARCHITECTURE
7373 Peak Drive Suite 250 Las Vegas, Nevada 89128
ph 702.363.2222 fax 702.363.6660 www.sh-architecture.com

CITY OF LAS VEGAS
PAVILION POOL COVER
101 SOUTH PAVILION CENTER DRIVE
LAS VEGAS, NEVADA 89144

WALL SECTIONS

STAMP
CURT JOHN CARLSON REGISTERED No. 3443 ARCHITECT STATE OF NEVADA
MAR 26 2009

OWNER: CITY OF LAS VEGAS
DEPARTMENT OF PUBLIC WORKS
ARCHITECTURAL SERVICES

400 EAST STEWART AVENUE
LAS VEGAS, NEVADA 89101
PHONE: (702) 229-6535
FAX: (702) 384-4846
TDD: (702) 386-9108

DRAWN	MAP/JW
FILE	A7.10
DATE	03-26-09
SCALE	1/2"=1'-0"
BID NO	07-15341.05
CLV DWG NO	107V3596-2
SHEET NO	A7.10

REVISED 9/27/07

DRAWINGS AS INSTRUMENTS OF SERVICE ARE THE PROPERTY OF THE DESIGN PROFESSIONAL WHOSE STAMP OF CERTIFICATION APPEARS ON THE DRAWINGS AND SPECIFICATIONS ANY USE OR REPRODUCTION, IN WHOLE OR IN PART WITHOUT WRITTEN CONSENT IS STRICTLY PROHIBITED COPIES OF THE DRAWINGS AND SPECIFICATIONS RETAINED BY THE CLIENT MAY BE UTILIZED ONLY FOR OCCUPYING THE PROJECT FOR WHICH THEY WERE PREPARED AND NOT FOR THE CONSTRUCTION OF ANY OTHER PROJECT © A C 633780

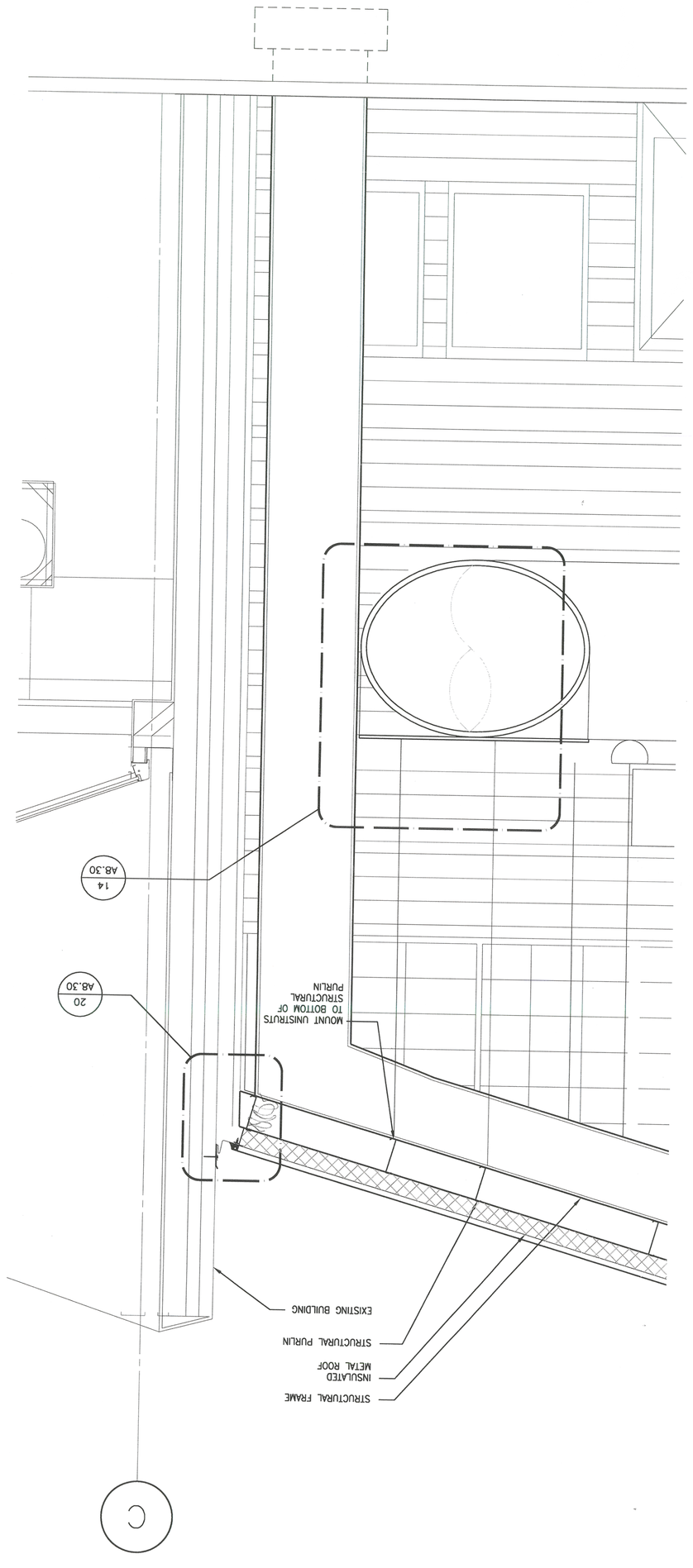

WALL SECTION 3 — 1/2" = 1'-0"

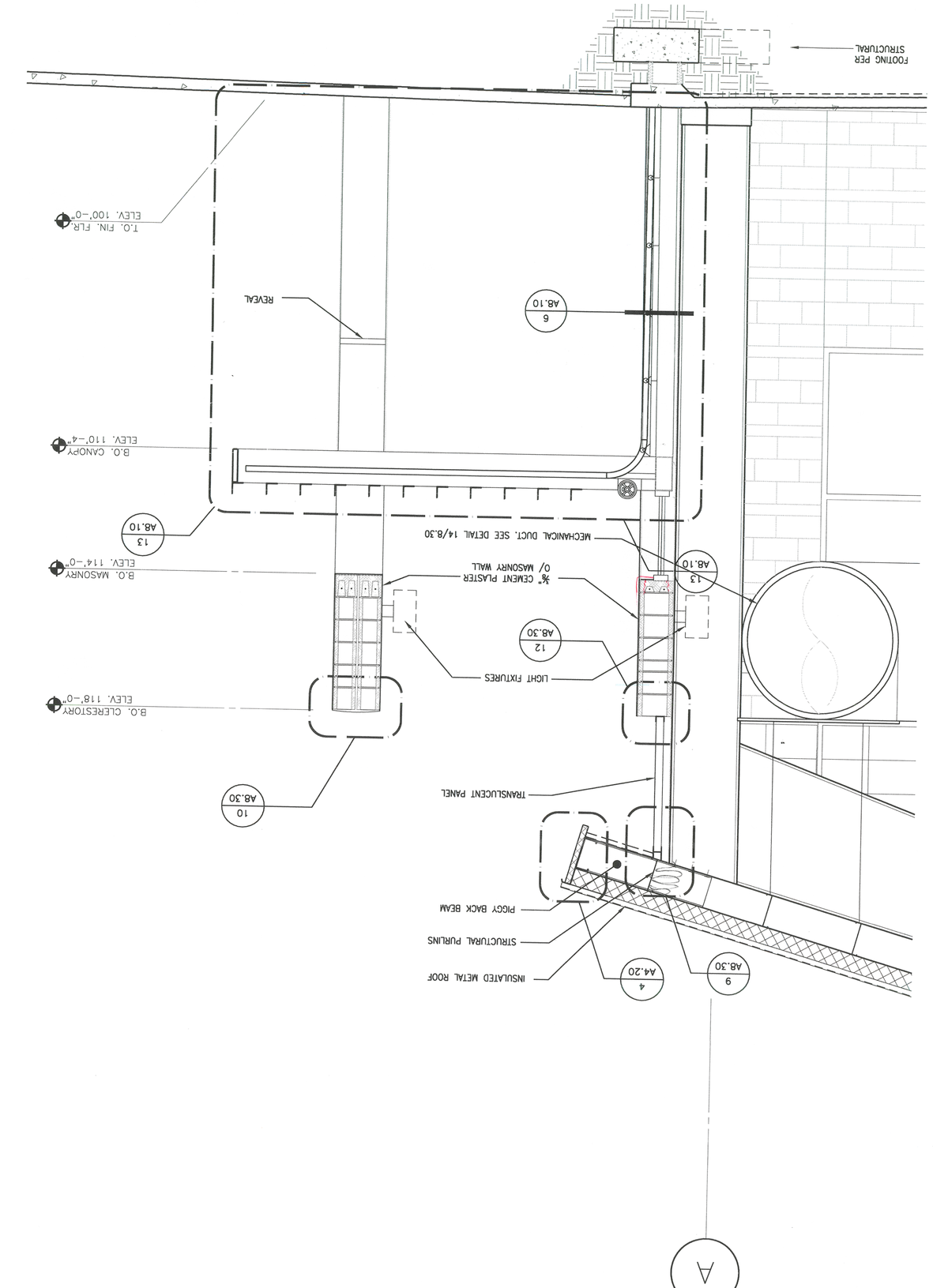

WALL SECTION 4 — 1/2" = 1'-0"

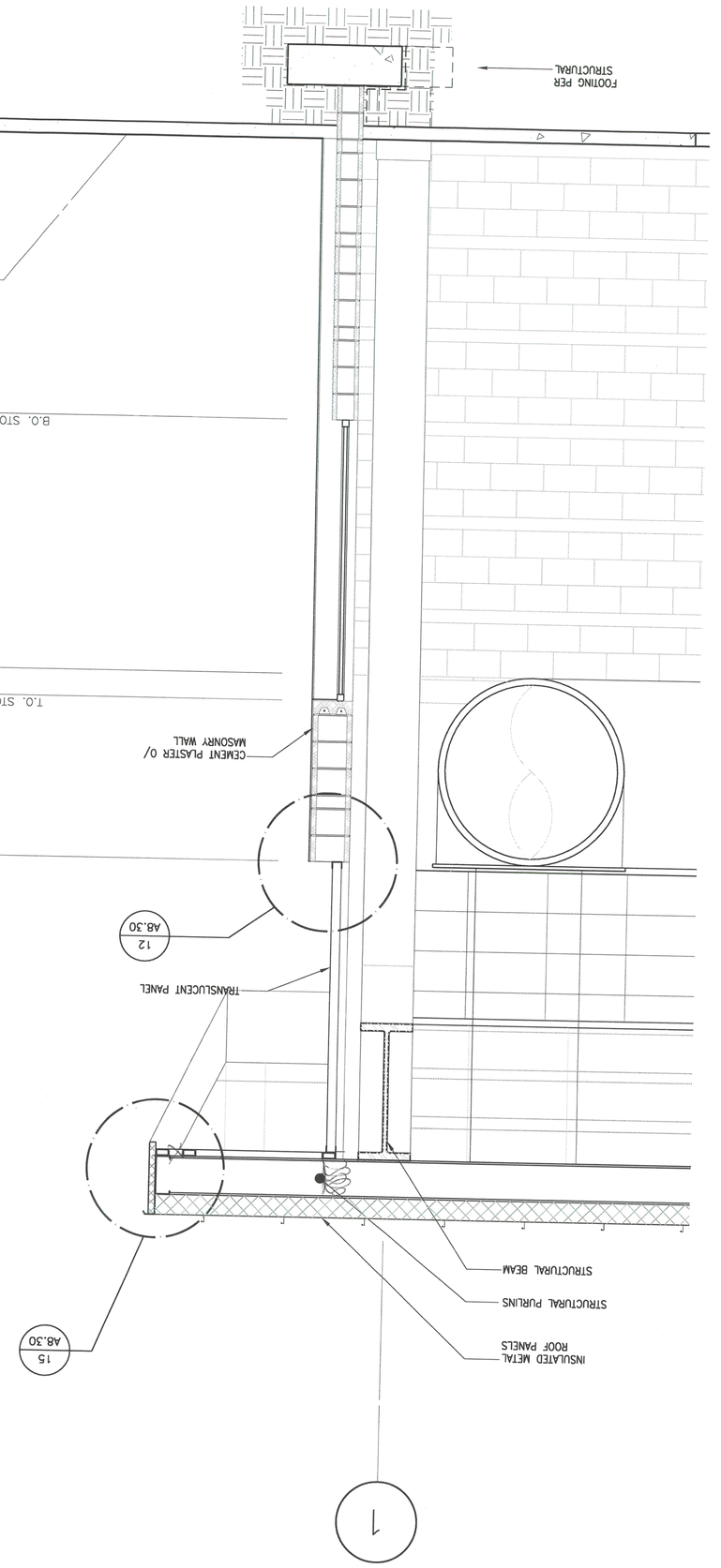

WALL SECTION 5 — 1/2" = 1'-0"

PERMIT SET

PLANS APPROVED
ARCHITECTURAL
Review & Comply Only
City of Las Vegas, Nevada

Date: APR 21 2009

Check Set Includes Changes Through:
Plan Changes Dated 03-26-09
Other Changes Approved Prior To
Issue of Permit, Not Shown Any Changes

MAR 26 2009

STAMP

JOHN CARLSON
No. 8493
REGISTERED ARCHITECT
STATE OF NEVADA

OWNER: CITY OF LAS VEGAS
DEPARTMENT OF PUBLIC WORKS
ARCHITECTURAL SERVICES
400 EAST STEWART AVENUE
LAS VEGAS, NEVADA 89101
PHONE: (702) 229-6535
FAX: (702) 386-6846
TDD: (702) 386-9108

DRAWN	MAP/JW
DATE	03-26-09
SCALE	1/2"=1'-0"
BID NO	07-15341.05
CITY DWG NO	10/V3596-2
SHT NO	A7.11

CITY OF LAS VEGAS
PAVILION POOL COVER
101 SOUTH PAVILION CENTER DRIVE
LAS VEGAS, NEVADA 89144

WALL SECTIONS

SHA ARCHITECTURE
7373 Peak Drive Suite 250 Las Vegas Nevada 89128
ph 702.363.2222 fax 702.363.6060 www.sha-architecture.com

CONSULTANT

REVISIONS

DRAWINGS AS INSTRUMENTS OF SERVICE ARE THE PROPERTY OF THE DESIGN PROFESSIONAL WHOSE STAMP OF CERTIFICATION APPEARS ON THE DRAWINGS AND SPECIFICATIONS. ANY USE OR REPRODUCTION, IN WHOLE OR IN PART WITHOUT WRITTEN CONSENT IS STRICTLY PROHIBITED COPIES OF THE DRAWINGS AND SPECIFICATIONS RETAINED BY THE CLIENT MAY BE UTILIZED ONLY FOR OCCUPYING THE PROJECT FOR WHICH THEY WERE PREPARED AND NOT FOR THE CONSTRUCTION OF ANY OTHER PROJECT. A.I.A. ©17-7858

A7.11

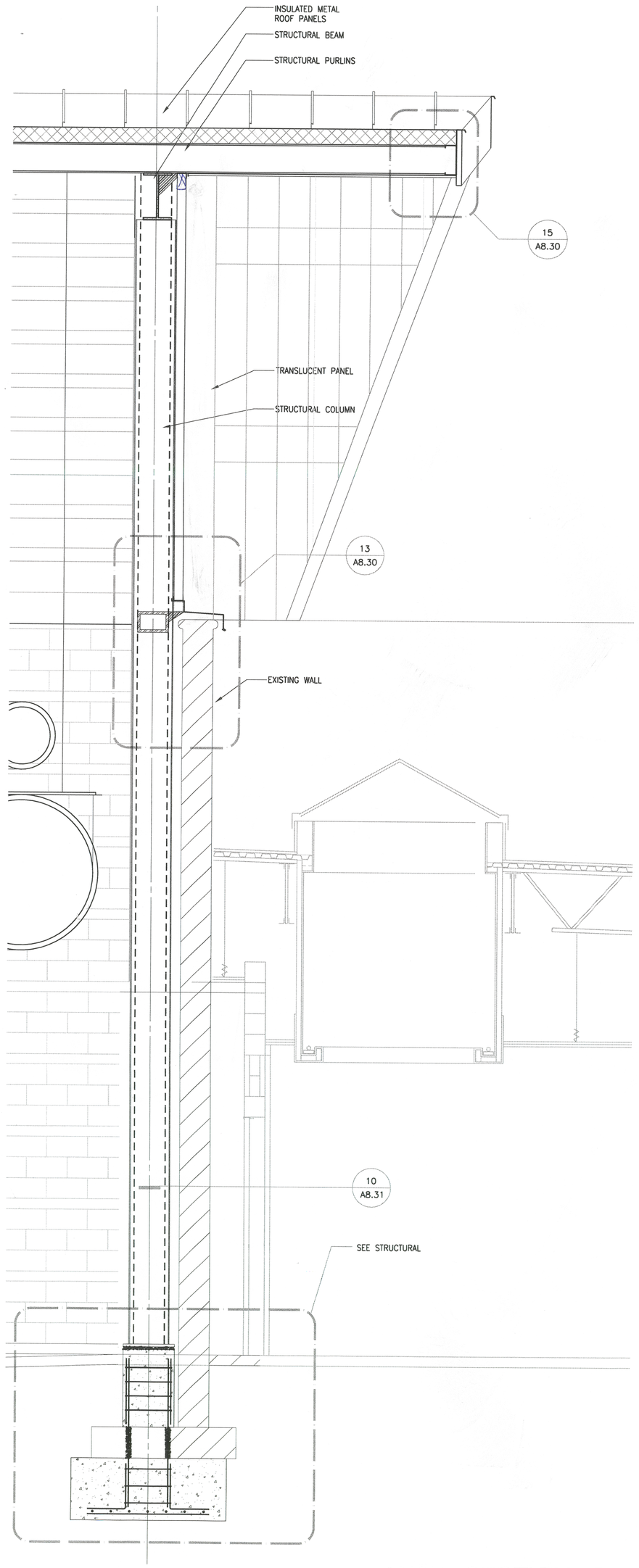

WALL SECTION 16
1/2" = 1'-0"

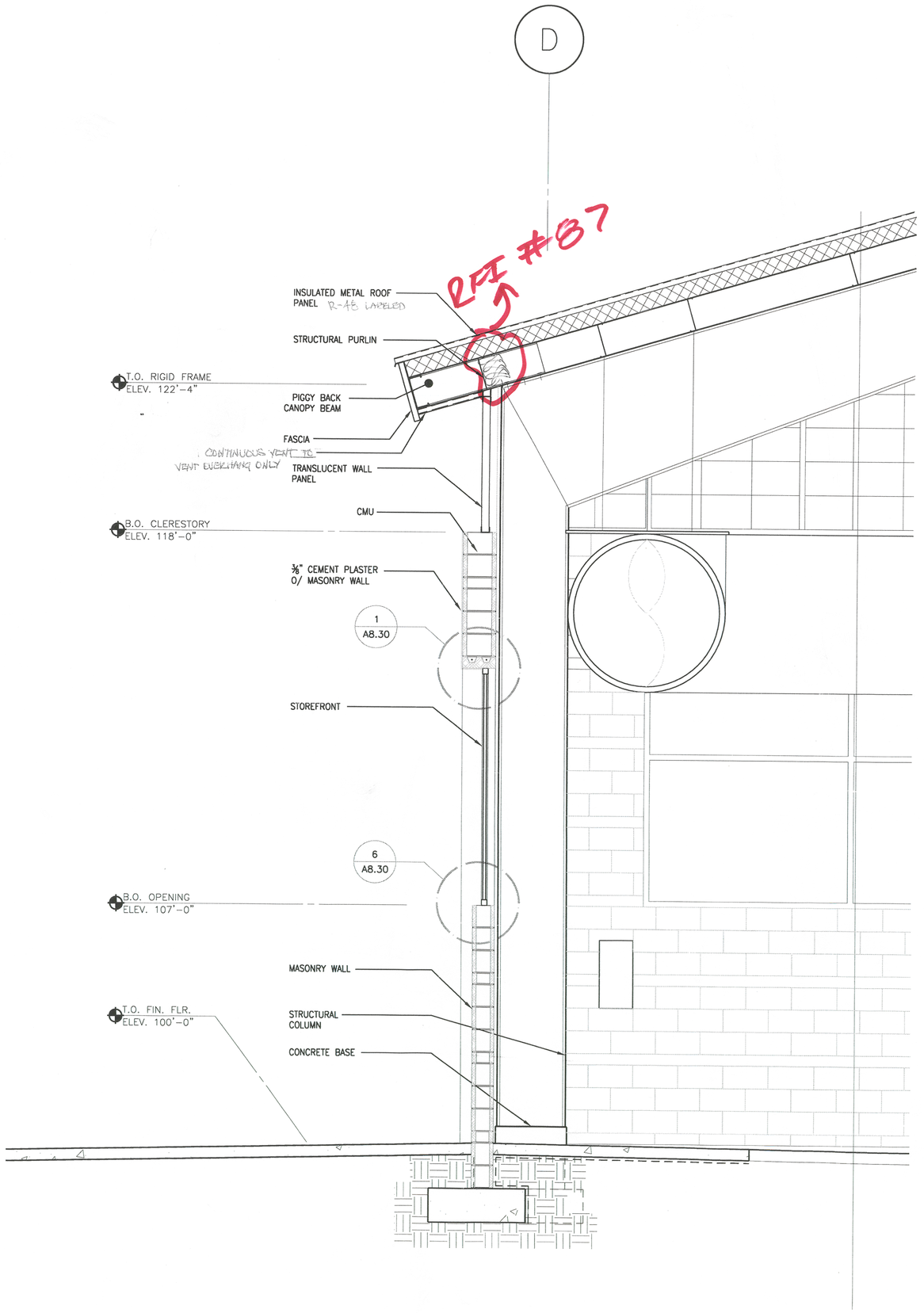

WALL SECTION 18
1/2" = 1'-0"

PLANS APPROVED
ARCHITECTURAL
Building & Safety Dept.
City of Las Vegas, Nevada

DATE APR 2 1 2009

Does Not Include Electrical, Plumbing, Mechanical, Structural or Off-site Improvements Make No Change Without Approval Plan is Not a Permit to Violate Any Ordinance

PERMIT SET

REVISIONS

CONSULTANT

SH ARCHITECTURE
7373 Peak Drive Suite 250 Las Vegas Nevada 89128
ph 702.363.2222 fax 702.363.6060 www.sh-architecture.com

CITY OF LAS VEGAS
PAVILION POOL COVER
101 SOUTH PAVILION CENTER DRIVE
LAS VEGAS, NEVADA 89144

WALL SECTIONS

STAMP

CURT JOHN CARLSON
REGISTERED
No. 3443
ARCHITECT
STATE OF NEVADA
MAR 2 6 2009

OWNER: CITY OF LAS VEGAS
DEPARTMENT OF PUBLIC WORKS
ARCHITECTURAL SERVICES

400 EAST STEWART AVENUE
LAS VEGAS, NEVADA 89101
PHONE: (702) 229-6535
FAX: (702) 384-4846
TDD: (702) 386-9108

DRAWN	MAP/JW
FILE	A7.11
DATE	03-26-09
SCALE	1/2"=1'-0"
BID NO	07-15341.05
CLV DWG NO	107V3596-2
SHT NO	A7.12

REVISED 8/27/03

DRAWINGS AS INSTRUMENTS OF SERVICE ARE THE PROPERTY OF THE DESIGN PROFESSIONAL WHOSE STAMP OF CERTIFICATION APPEARS ON THE DRAWINGS AND SPECIFICATIONS ANY USE OR REPRODUCTION IN WHOLE OR IN PART WITHOUT WRITTEN CONSENT IS STRICTLY PROHIBITED COPIES OF THE DRAWINGS AND SPECIFICATIONS RETAINED BY THE CLIENT MAY BE UTILIZED ONLY FOR OCCUPYING THE PROJECT FOR WHICH THEY WERE PREPARED AND NOT FOR THE CONSTRUCTION OF ANY OTHER PROJECT N A C 623.780

DOOR SCHEDULE

NO.	TYP.	DOOR WIDTH	DOOR HEIGHT	DOOR THICK	DOOR GLASS	DOOR MATERIAL	DOOR FINISH	FRAME TYPE	FRAME DETAIL HEAD	FRAME DETAIL JAMB	FRAME DETAIL SILL	FRAME MATERIAL	FRAME FINISH	FIRE RATING	HDWR SET	REMARKS
100A	C	18'-0"	10'-0"	MANUF.	PLEXIGLASS	ALUM.	CLR.	–	13/A8.10	6/A8.10	--	--	--	--	2	MANUAL OPERATION
100B	C	18'-0"	10'-0"	MANUF.	PLEXIGLASS	ALUM.	CLR.	–	13/A8.10	6/A8.10	--	--	--	--	2	MANUAL OPERATION
100C	C	18'-0"	10'-0"	MANUF.	PLEXIGLASS	ALUM.	CLR.	–	13/A8.10	6/A8.10	--	--	--	--	2	MANUAL OPERATION
100D	A	PAIR 3'-0"	7'-0"	1-3/4"	TEMP.	ALUM.	CLR.	1	--	--	--	ALUM.	CLR.	--	1	REMOVABLE ASTRAGAL, METAL PLATE W/ PANIC HARDWARE
100E	A	PAIR 3'-0"	7'-0"	1-3/4"	TEMP.	ALUM.	CLR.	1	--	--	--	ALUM.	CLR.	--	1	REMOVABLE ASTRAGAL, METAL PLATE W/ PANIC HARDWARE
100F	C	18'-0"	10'-0"	MANUF.	PLEXIGLASS	ALUM.	CLR.	–	13/A8.10	6/A8.10	--	--	--	--	2	MANUAL OPERATION
100G	C	18'-0"	10'-0"	MANUF.	PLEXIGLASS	ALUM.	CLR.	–	13/A8.10	6/A8.10	--	--	--	--	2	MANUAL OPERATION
100H	C	18'-0"	10'-0"	MANUF.	PLEXIGLASS	ALUM.	CLR.	–	13/A8.10	6/A8.10	--	--	--	--	2	MANUAL OPERATION
100J	A	PAIR 3'-0"	7'-0"	1-3/4"	TEMP.	ALUM.	CLR.	1	--	--	--	ALUM.	CLR.	--	1	REMOVABLE ASTRAGAL, METAL PLATE W/ PANIC HARDWARE
100K	C	18'-0"	10'-0"	MANUF.	PLEXIGLASS	ALUM.	CLR.	–	13/A8.10	6/A8.10	--	--	--	--	2	MANUAL OPERATION
101A	B	PAIR 3'-0"	7'-0"	1-3/4"	--	H.M.	PT-4	2	10/A8.10	19/A8.10	20/A8.10	H.M.	PT-4	--	3	MANUAL OPERATION
101B	B	3'-0"	7'-0"	1-3/4"	--	H.M.	PT-4	3	10/A8.10	15/A8.10	20/A8.10	H.M.	PT-4	--	4	--
102A	B	3'-0"	7'-0"	1-3/4"	--	H.M.	PT-2	3	10/A8.10	15/A8.10	20/A8.10	H.M.	PT-2	--	4	--
102B	D	6'-0"	8'-0"	MANUF.	--	STL.	PT-2	–	9/A8.10	14/A8.10	--	--	--	--	2	MANUAL OPERATION
103	B	3'-0"	7'-0"	1-3/4"	--	H.M.	PT-4	3	10/A8.10	15/A8.10	20/A8.10	H.M.	PT-4	45 MIN	5	--
G1	E	PAIR 3'-6"	6'-6"	--	--	H.M.	-	–	--	--	--	H.M.	--	--	-	MATCH EXISTING DOUBLE DOOR GATE ON SITE

A. EXIT DOORS SHALL BE OPERABLE FROM THE INSIDE WITHOUT THE USE OF A KEY OR ANY SPECIAL KNOWLEDGE OR EFFORT. KEY LOCKING HARDWARE MAY BE USED ON THE MAIN ENTRANCE IF THERE IS A READILY VISIBLE, DURABLE SIGN ON OR ADJACENT THE DOOR STATING "THIS DOOR TO REMAIN UNLOCKED DURING BUSINESS HOURS."

B. DOOR OPERATING DEVICES SHALL BE LEVER OPERATED, PUSH TYPE OR U-SHAPED HANDLES PER ANSI A117.1

C. THE BOTTOM 10" OF ALL DOORS SHALL BE PROVIDED WITH A SMOOTH SURFACE TO ALLOW THE DOOR TO BE OPENED WITH A WHEELCHAIR FOOTREST PER ANSI A117.1

D. ALL H.M. DOORS AND FRAMES TO BE PAINTED TO MATCH ADJACENT SURFACE U.N.O.

DOOR TYPES

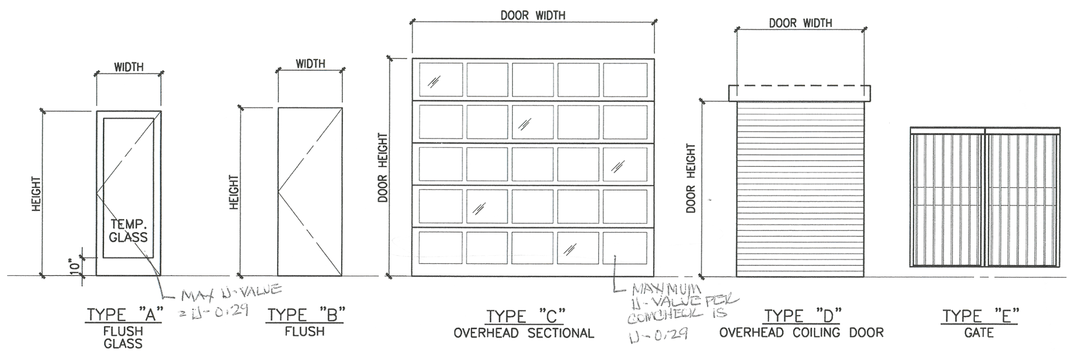

TYPE "A" FLUSH GLASS

TYPE "B" FLUSH

TYPE "C" OVERHEAD SECTIONAL

TYPE "D" OVERHEAD COILING DOOR

TYPE "E" GATE

FRAME TYPES

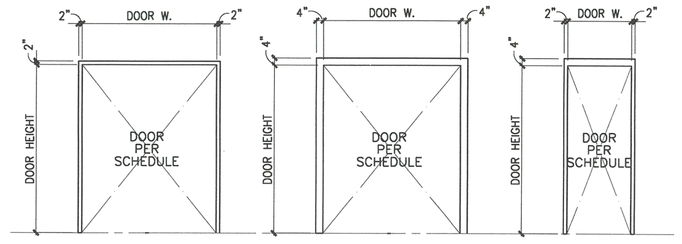

TYPE "1"

TYPE "2"

TYPE "3"

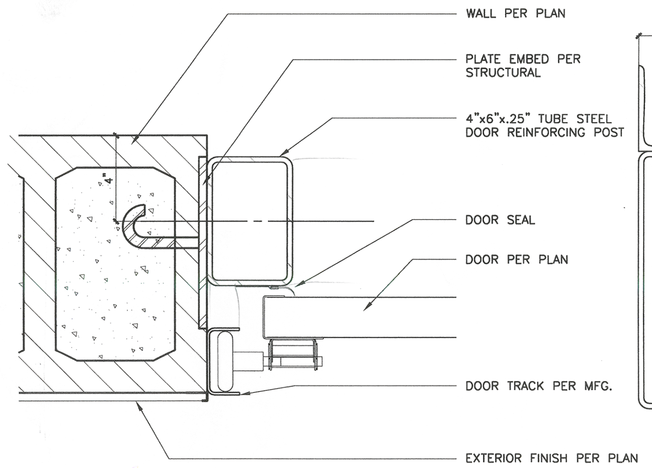

DETAIL 6
3"=1'-0"
D08.10-1

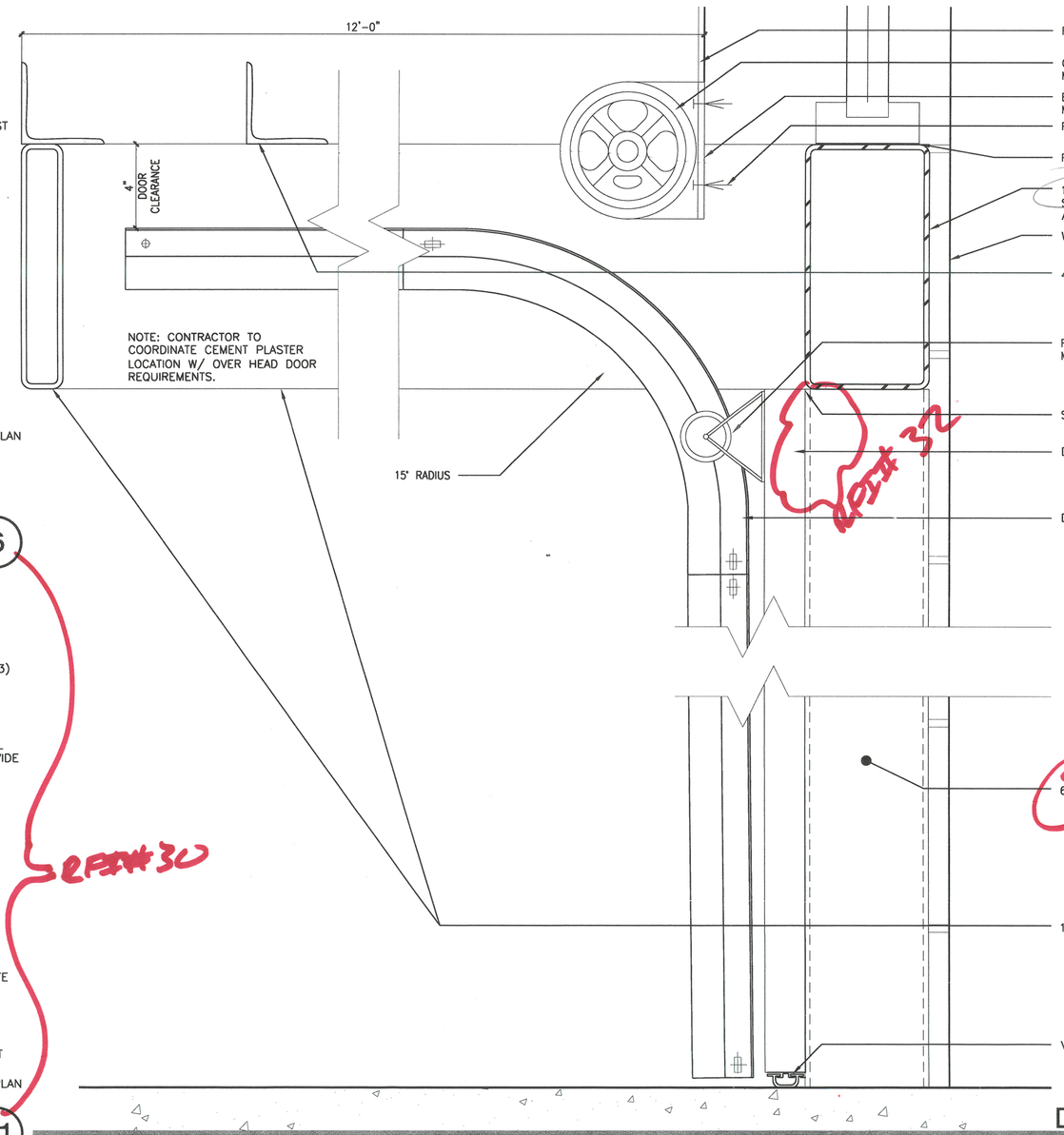

DETAIL 9
3"=1'-0"
G201-06

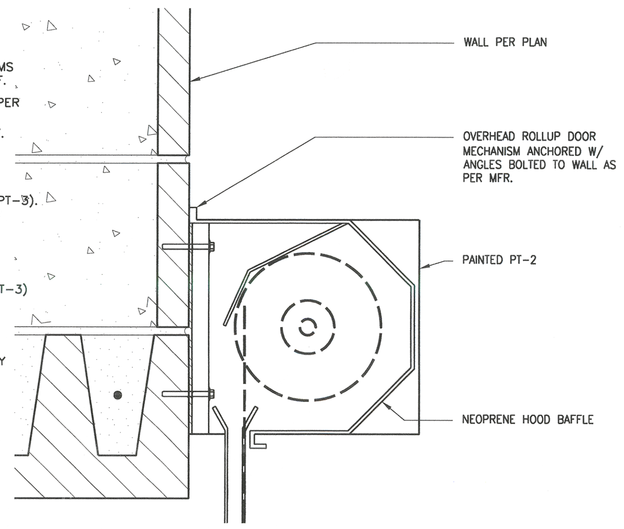

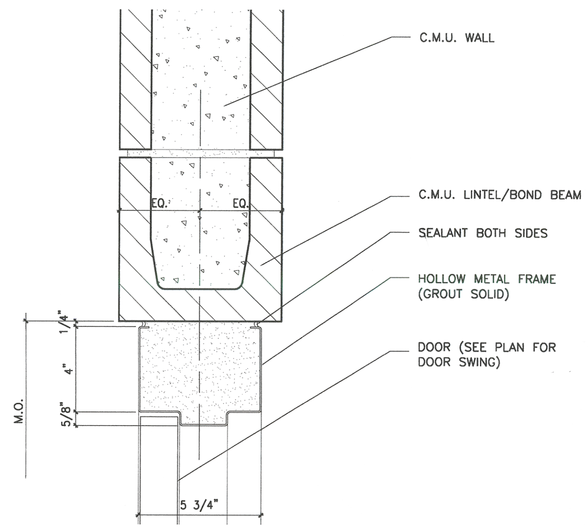

DETAIL 10
3" = 1'-0"

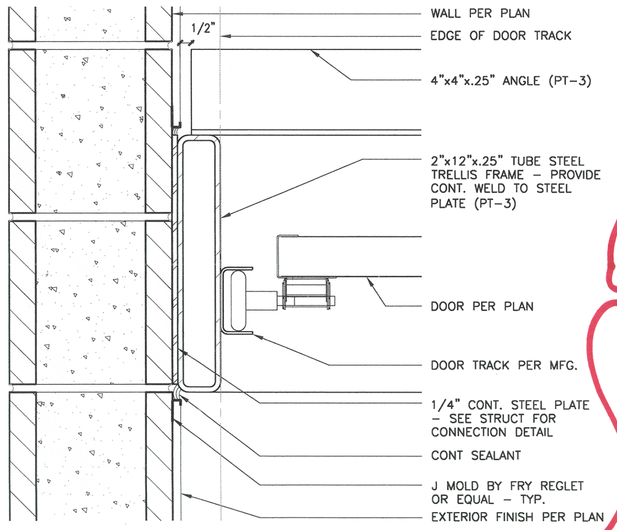

DETAIL 11
3"=1'-0"

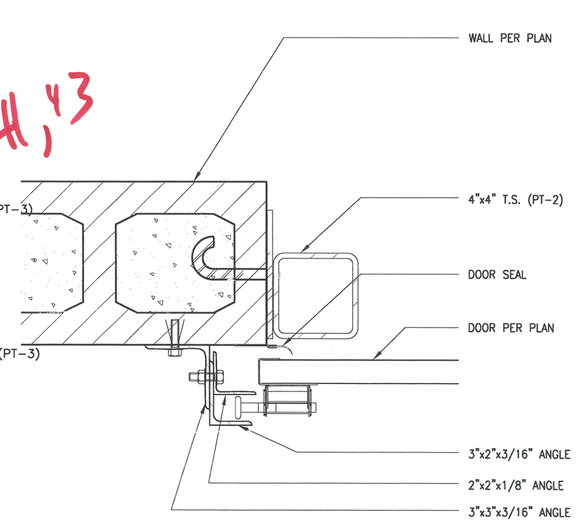

DETAIL 13
3" = 1'-0"

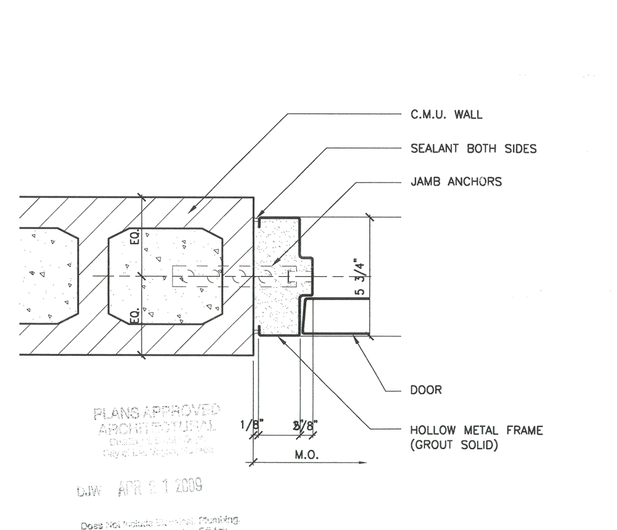

DETAIL 14
3"=1'-0"

PLANS APPROVED
ARCHITECTURAL
STRUCTURAL
MECHANICAL
ELECTRICAL
PLUMBING
DATE APR 17 2009
Does not include construction means, methods, techniques, sequences or procedures or safety precautions or programs in connection with the work. The permit holder is not relieved of any responsibility or obligations specified in the contract documents or local building laws or regulations by virtue of the approval of these drawings.

A8.10-15

DETAIL 15
3"=1'-0"

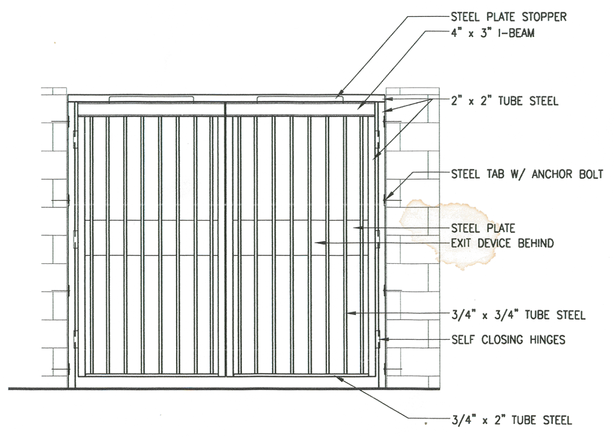

DETAIL 18
1/2"=1'-0"
A8.10-17

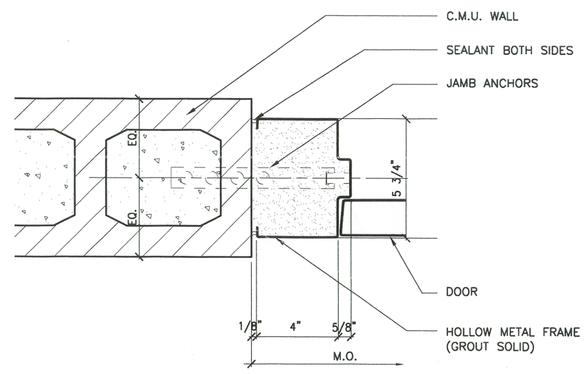

DETAIL 19
3"=1'-0"
A8.10-19

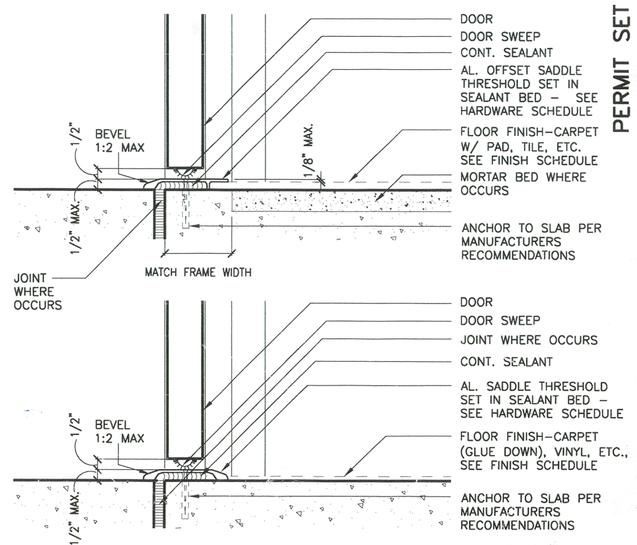

DETAIL 20
3" = 1'-0"
G001-01

PERMIT SET

REVISIONS

CONSULTANT

SH ARCHITECTURE
737 S. Rock Drive Suite 250 Las Vegas, Nevada 89128
ph. 702.383.2222 fax 702.383.6060 www.sh-architecture.com

CITY OF LAS VEGAS
PAVILION POOL COVER
101 SOUTH PAVILION CENTER DRIVE
LAS VEGAS, NEVADA 89144
DOOR TYPES & SCHEDULE

DRAWINGS AS INSTRUMENTS OF SERVICE ARE THE PROPERTY OF THE DESIGN PROFESSIONAL WHOSE STAMP OF CERTIFICATION APPEARS ON THE DRAWINGS AND SPECIFICATIONS ANY USE OR REPRODUCTION IN WHOLE OR IN PART WITHOUT WRITTEN CONSENT IS STRICTLY PROHIBITED COPIES OF THE DRAWINGS AND SPECIFICATIONS RETAINED BY THE CLIENT MAY BE UTILIZED ONLY FOR DOCUMENTING THE PROJECT FOR WHICH THEY WERE PREPARED AND NOT FOR THE CONSTRUCTION OF ANY OTHER PROJECT N A C 623-780

STAMP
CURT JOHN CARLSON REGISTERED No. 3443 ARCHITECT STATE OF NEVADA
MAR 26 2009

OWNER: CITY OF LAS VEGAS
DEPARTMENT OF PUBLIC WORKS
ARCHITECTURAL SERVICES

400 EAST STEWART AVENUE
LAS VEGAS, NEVADA 89101
PHONE: (702) 229-6535
FAX: (702) 384-4846
TDD: (702) 386-9108

DRAWN	MAP/JW
FILE	A8.10
DATE	03-26-09
SCALE	VARIES
BID NO	07-15341.05
CLV DWG NO	107V3596-2
SHT NO	A8.10

REVISED 8/27/03

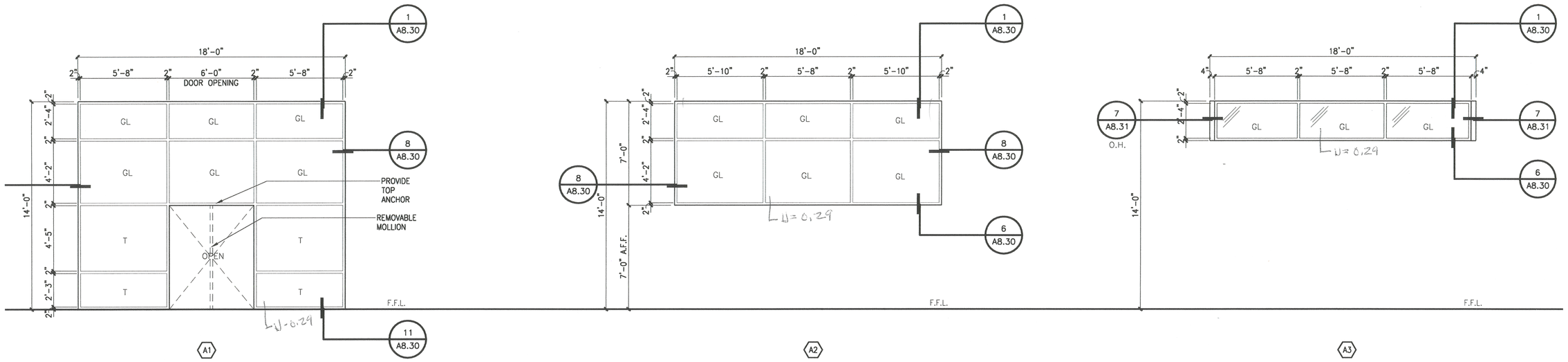

SHEET NOTES

A. ALL TRANSLUCENT PANELS TO USE A WHITE FACE SHEET ON THE INTERIOR AND A CRYSTAL FACE SHEET ON THE EXTERIOR.

B. ALL ALUMINUM FRAMES TO BE CLEAR ANODIZED U.N.O.

C. FRAME TYPES B1 AND B2 SHALL HAVE TP1 UNLESS NOTES OTHERWISE.

WINDOW LEGEND

GL	1" INSULATED GLAZING
T	TEMPERED GLASS
TP1	TRANSLUCENT PANEL W/O INSULATION
TP2	TRANSLUCENT PANEL W/ INSULATION DYED PT-21
TP3	TRANSLUCENT PANEL W/ INSULATION DYED PT-20

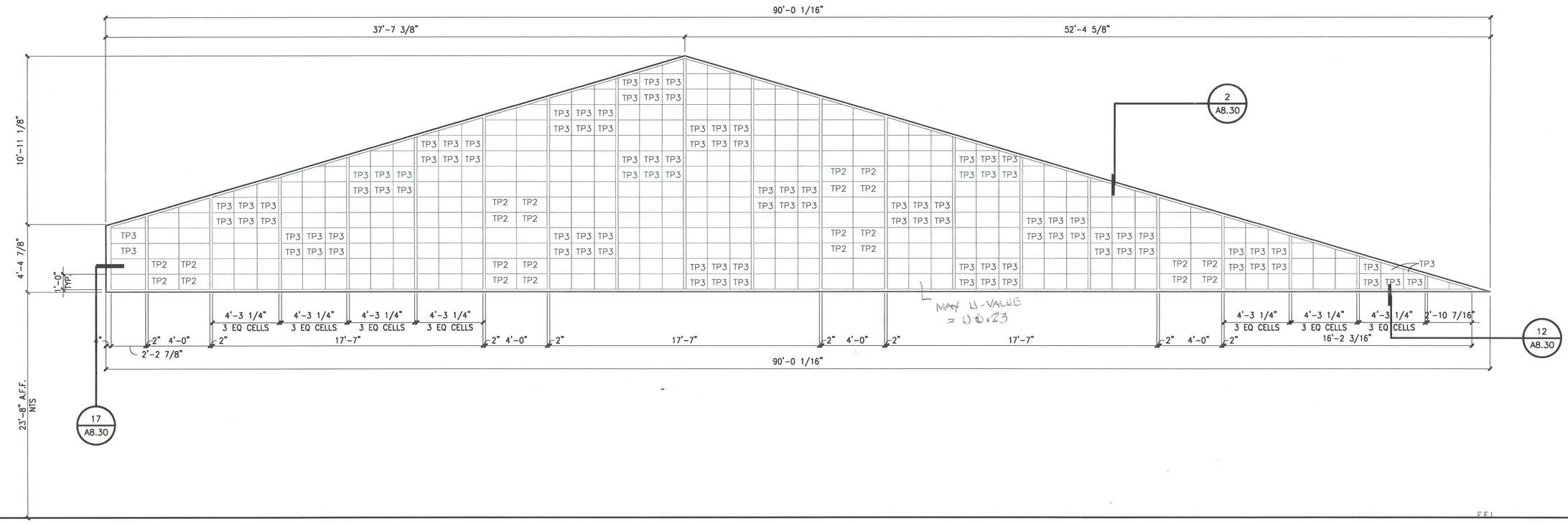

RFI# 12

NOTE: ALL WINDOWS MUST BE NFRC LABELED OR CERTIFIED IN WRITING BY CERTIFIED BY NFRC RATER.

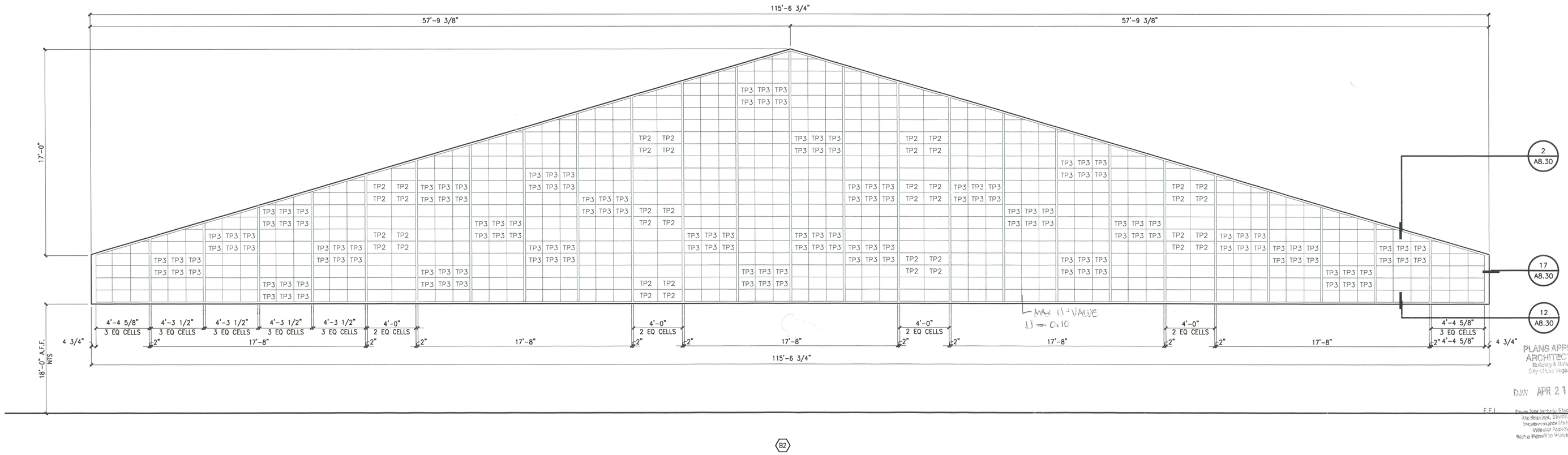

PERMIT SET

PLANS APPROVED ARCHITECTURAL
Building & Safety Dept.
City of Las Vegas, Nevada
DJW APR 21 2009
Plans Not Yet Reviewed, Plumbing, Mechanical, Structural or Certain Improvements Made Its Change Without Approval Plan Is Not a Permit to Violate Any Ordinance

WINDOW FRAME TYPES

1/4" = 1'-0"

REVISIONS

CONSULTANT

SH ARCHITECTURE
7373 Peak Drive Suite 250 Las Vegas Nevada 89128
ph 702.363.2222 fax 702.363.6060 www.sh-architecture.com

CITY OF LAS VEGAS
PAVILION POOL COVER
101 SOUTH PAVILION CENTER DRIVE
LAS VEGAS, NEVADA 89144
WINDOW FRAME TYPES

STAMP
CURT JOHN CARLSON
REGISTERED
No. 8443
ARCHITECT
STATE OF NEVADA
MAR 26 2009

OWNER: CITY OF LAS VEGAS
DEPARTMENT OF PUBLIC WORKS
ARCHITECTURAL SERVICES
400 EAST STEWART AVENUE
LAS VEGAS, NEVADA 89101
PHONE: (702) 229-6535
FAX: (702) 384-4846
TDD: (702) 386-9108

DRAWN	MAP/JW
FILE	A8.20
DATE	03-26-09
SCALE	1/4"=1'-0"
BID NO	07-15341.05
CLV DWG NO	107V3596-2
SHT NO	A8.20

REVISED 8/27/03

DRAWINGS AS INSTRUMENTS OF SERVICE ARE THE PROPERTY OF THE DESIGN PROFESSIONAL WHOSE STAMP OF CERTIFICATION APPEARS ON THE DRAWINGS AND SPECIFICATIONS ANY USE OR REPRODUCTION IN WHOLE OR IN PART WITHOUT WRITTEN CONSENT IS STRICTLY PROHIBITED COPIES OF THE DRAWINGS AND SPECIFICATIONS RETAINED BY THE CLIENT MAY BE UTILIZED ONLY FOR OCCUPYING THE PROJECT FOR WHICH THEY WERE PREPARED AND NOT FOR THE CONSTRUCTION OF ANY OTHER PROJECT N A C 623.790

SHEET NOTES

A. ALL TRANSLUCENT PANEL TO USE A WHITE FACE SHEET ON THE EXTERIOR AND A CRYSTAL FACE SHEET ON THE INTERIOR.

B. ALL ALUMINUM FRAMES TO BE CLEAR ANODIZED U.N.O.

C. FRAME TYPES B3 AND B4 SHALL HAVE TP1 UNLESS NOTES OTHERWISE.

WINDOW LEGEND

GL	1" INSULATED GLAZING
T	TEMPERED GLASS
TP1	TRANSLUCENT PANEL W/O COLOR
TP2	TRANSLUCENT PANEL W/ INSULATION DYED PT-21
TP3	TRANSLUCENT PANEL W/ INSULATION DYED PT-20

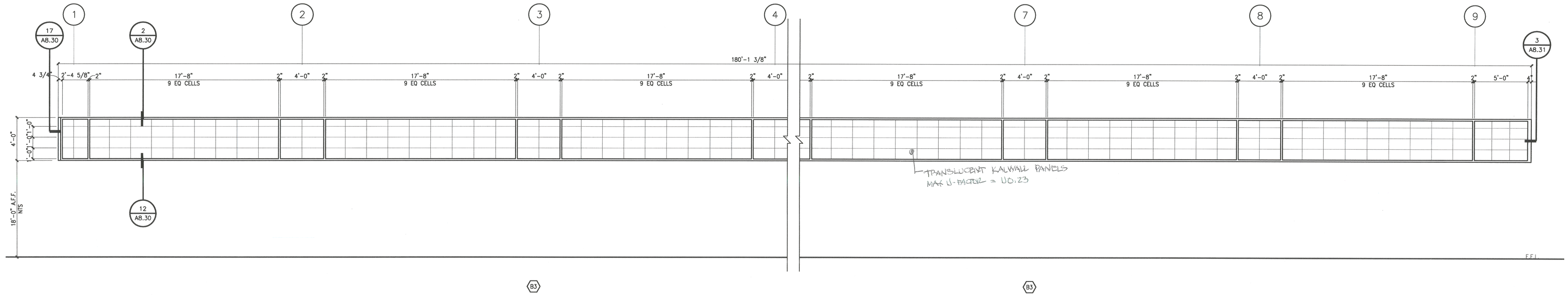

PERMIT SET

PLANS APPROVED
ARCHITECTURAL
Building & Safety Dept.
City of Las Vegas, Nevada

APR 2 1 2009

Plans Not Issued Electrical, Plumbing, Mechanical, Structural or Off-Site Improvements Made No Change Without Approval Plan is Not a Permit to Violate Any Ordinance

WINDOW FRAME TYPES

1/4" = 1'-0"

REVISIONS

CONSULTANT

SHI ARCHITECTURE
7373 Peak Drive Suite 250 Las Vegas Nevada 89128
ph 702.363.2222 fax 702.363.6060 www.sh-architecture.com

CITY OF LAS VEGAS
PAVILION POOL COVER
101 SOUTH PAVILION CENTER DRIVE
LAS VEGAS, NEVADA 89144

WINDOW FRAME TYPES

STAMP

CURT JOHN CARLSON
REGISTERED
No. 3443
ARCHITECT
STATE OF NEVADA
MAR 2 6 2009

OWNER: CITY OF LAS VEGAS
DEPARTMENT OF PUBLIC WORKS
ARCHITECTURAL SERVICES

400 EAST STEWART AVENUE
LAS VEGAS, NEVADA 89101
PHONE: (702) 229-6535
FAX: (702) 384-4846
TDD: (702) 386-9108

DRAWN	MAP/JW
FILE	A8.21
DATE	03-26-09
SCALE	1/4"=1'-0"
BID NO	07-15341.05
CLV DWG NO	107V3596-2
SHT NO	A8.21

REVISED 8/27/07

DRAWINGS AS INSTRUMENTS OF SERVICE ARE THE PROPERTY OF THE DESIGN PROFESSIONAL WHOSE STAMP OF CERTIFICATION APPEARS ON THE DRAWINGS AND SPECIFICATIONS RETAINED BY THE CLIENT MAY BE UTILIZED ONLY FOR OCCUPYING THE PROJECT FOR WHICH THEY WERE PREPARED AND NOT FOR THE CONSTRUCTION OF ANY OTHER PROJECT IN A C 623.780

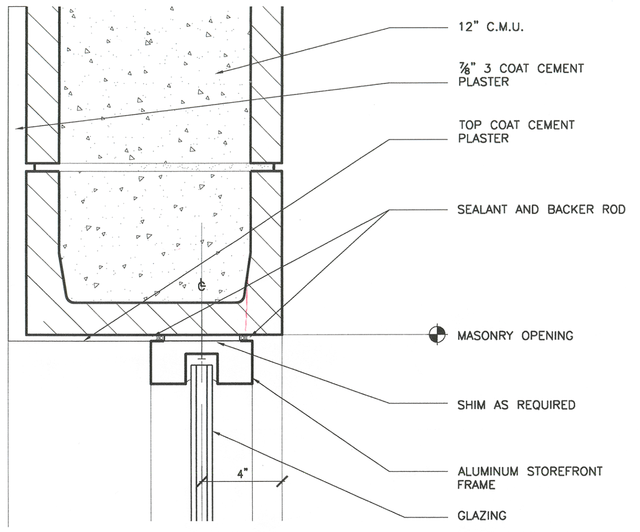

DETAIL 1
3" = 1'-0"
A8.30-01

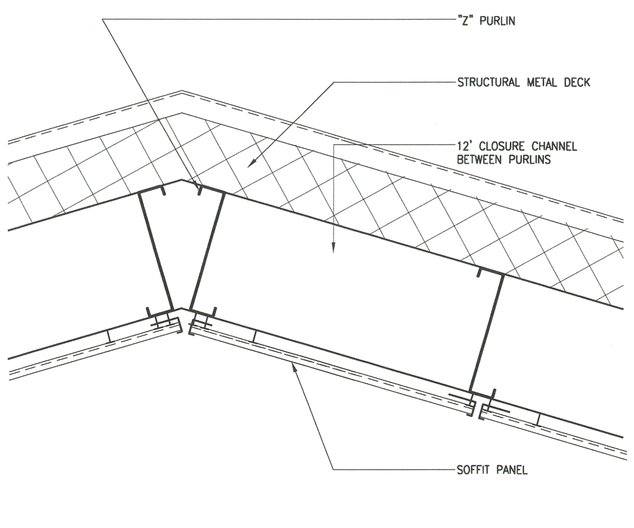

DETAIL 2
1 1/2"=1'-0"
A8.30-02

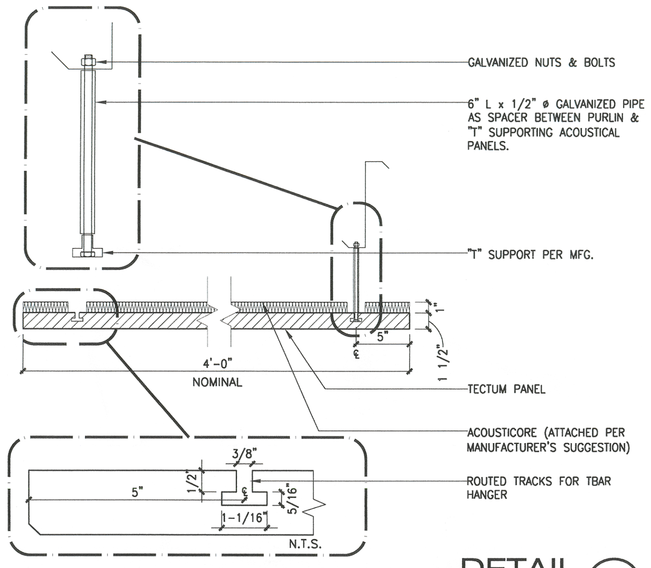

DETAIL 3
1 1/2"=1'-0"
A8.30-03

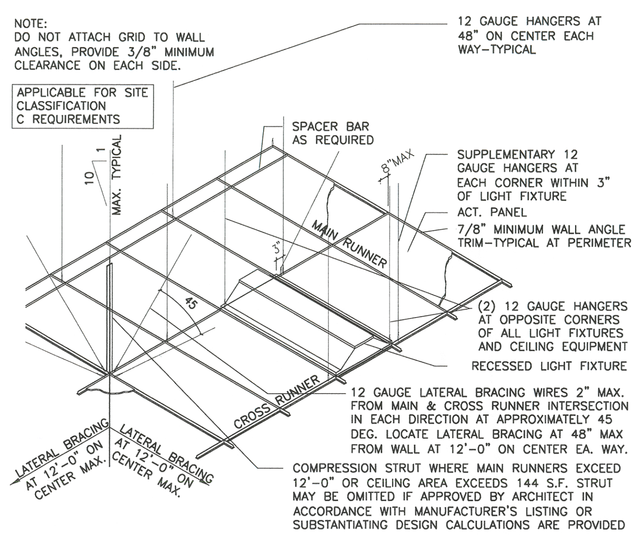

DETAIL 4
N.T.S
M113-02

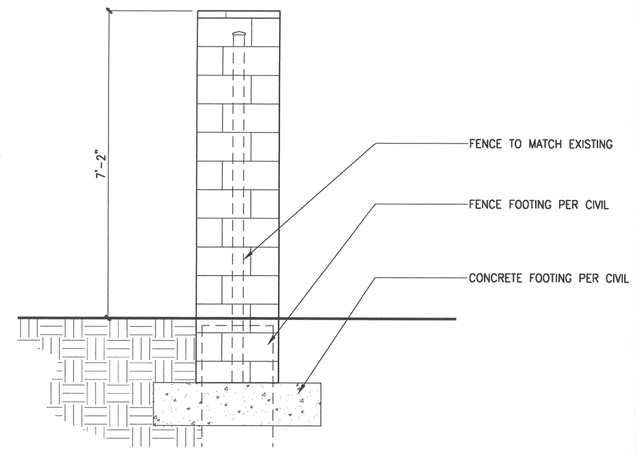

DETAIL 5
1/2" = 1'-0"

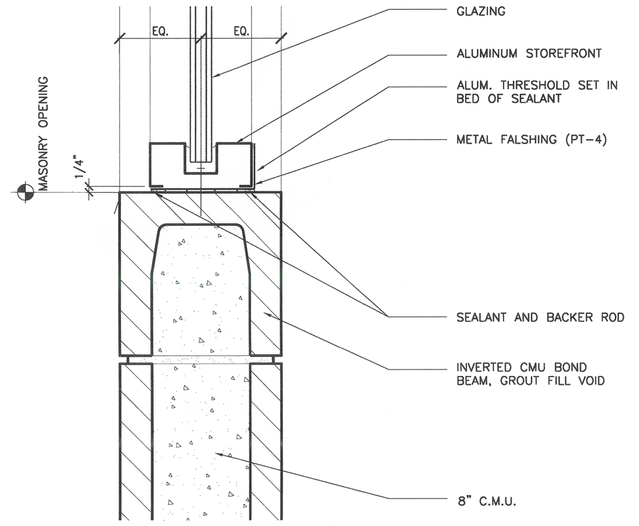

DETAIL 6
3" = 1'-0"
A8.30-06

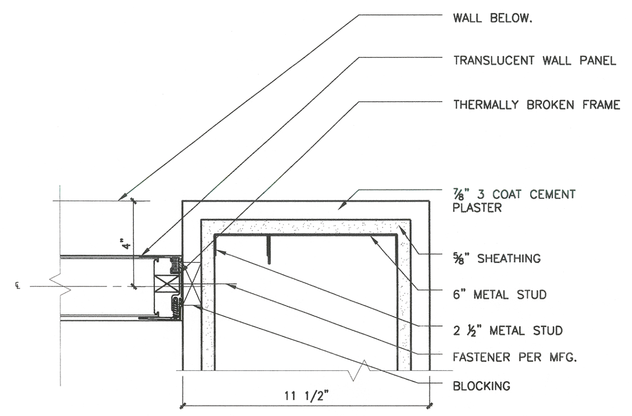

DETAIL 7
3"=1'0"
A8.30-07

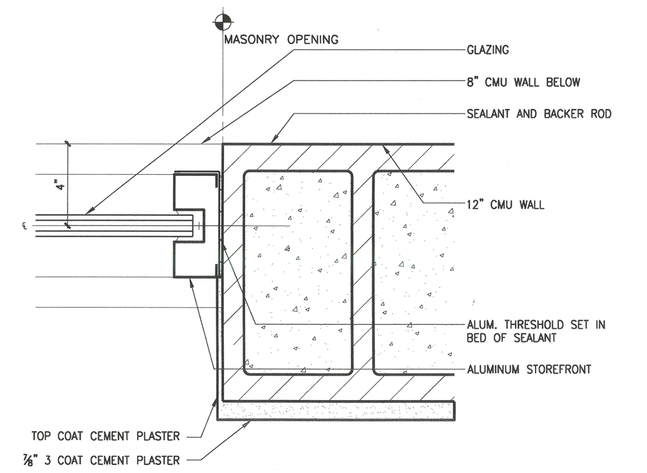

DETAIL 8
3" = 1'-0"
A8.30-8

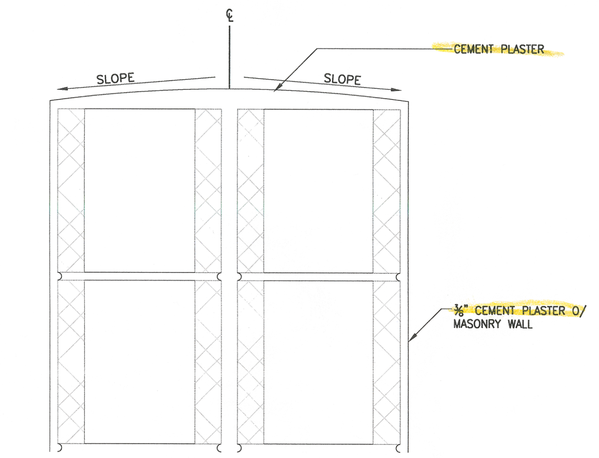

DETAIL 10
3"=1'-0"

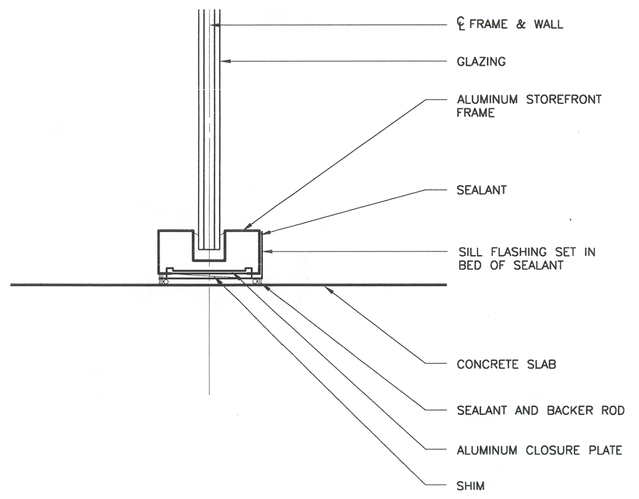

DETAIL 11
3" = 1'-0"
A8.30-11

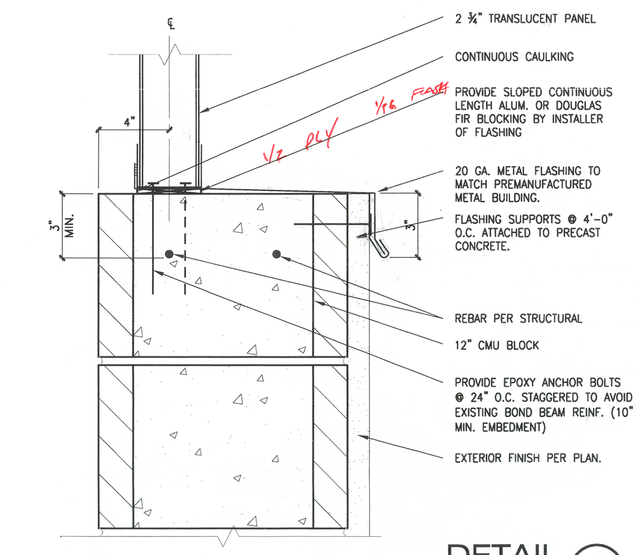

DETAIL 12
3"= 1'-0"
A8.30-13

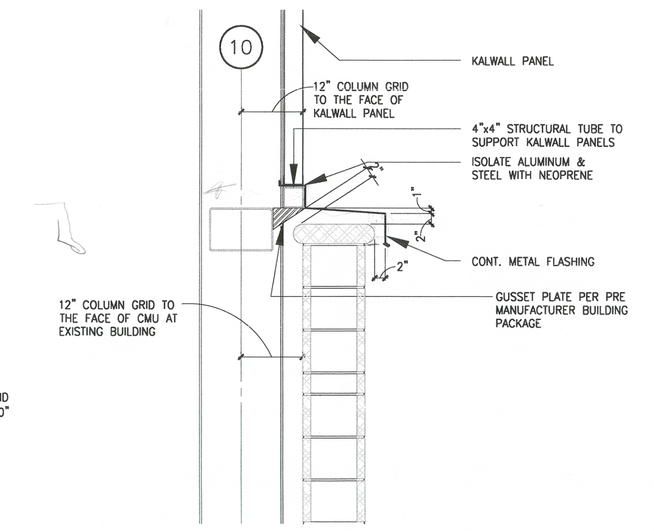

DETAIL 13
3/4"=1'-0"
A8.30-14

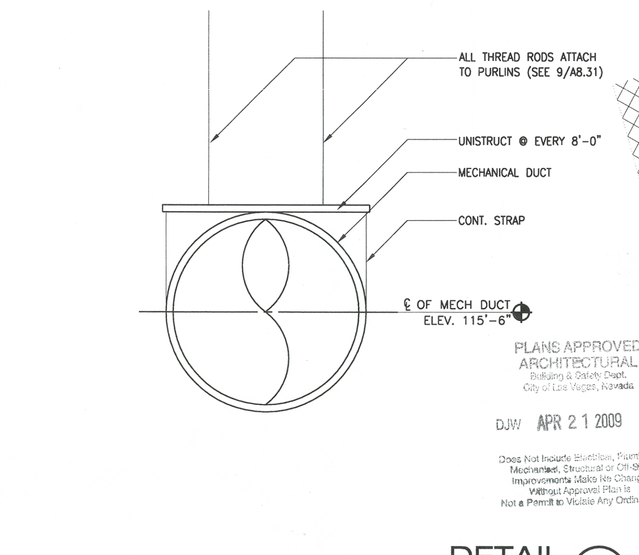

DETAIL 14
1/2"=1'-0"
A8.30-14

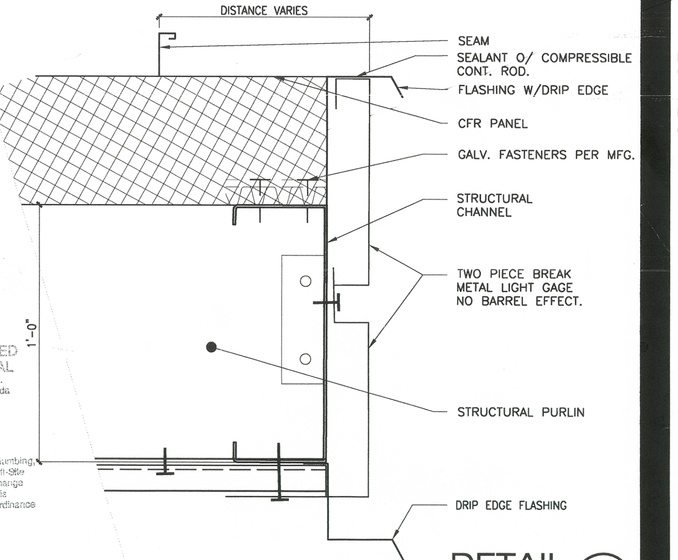

DETAIL 15
3"= 1'-0"
A8.30-20

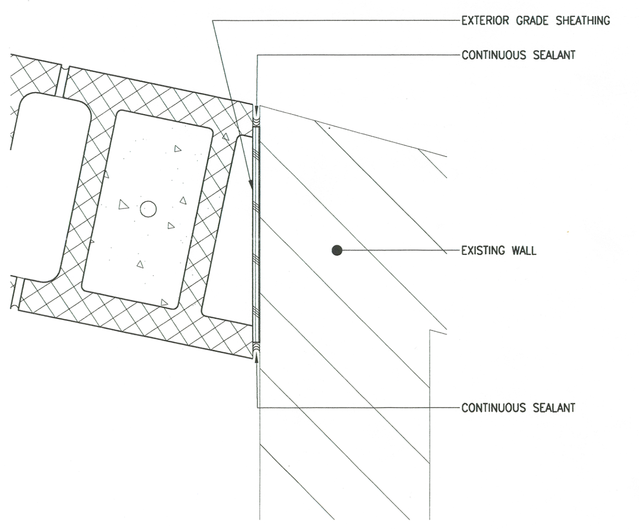

DETAIL 16
3"=1'-0"
A8.30-16

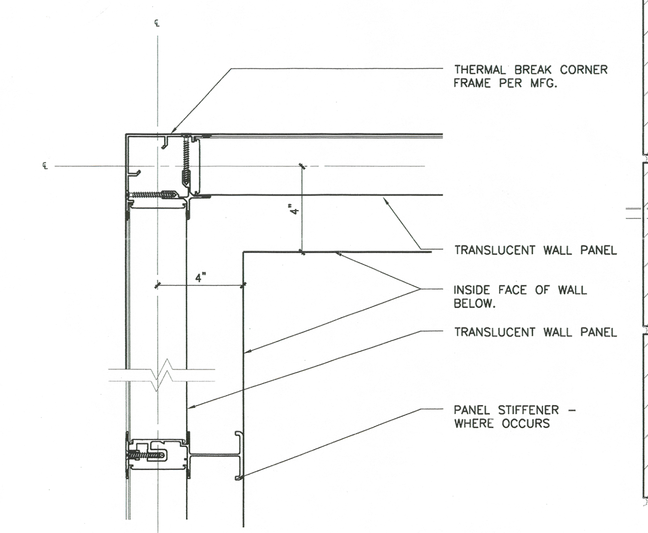

DETAIL 17
3"=1'-0"

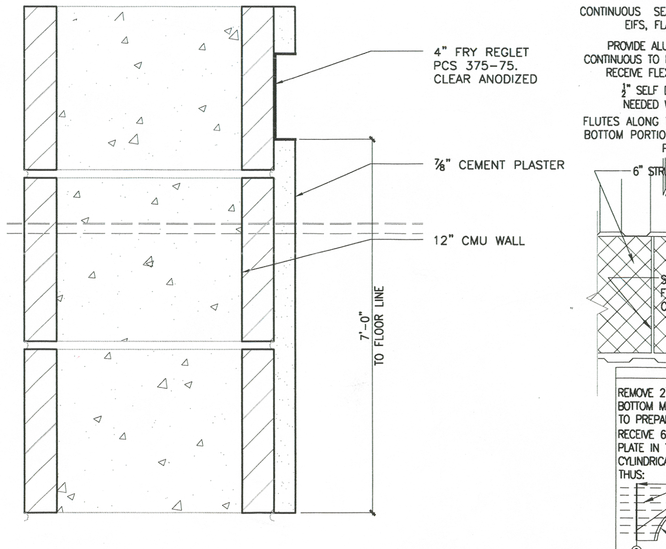

DETAIL 5
1/2" = 1'-0"

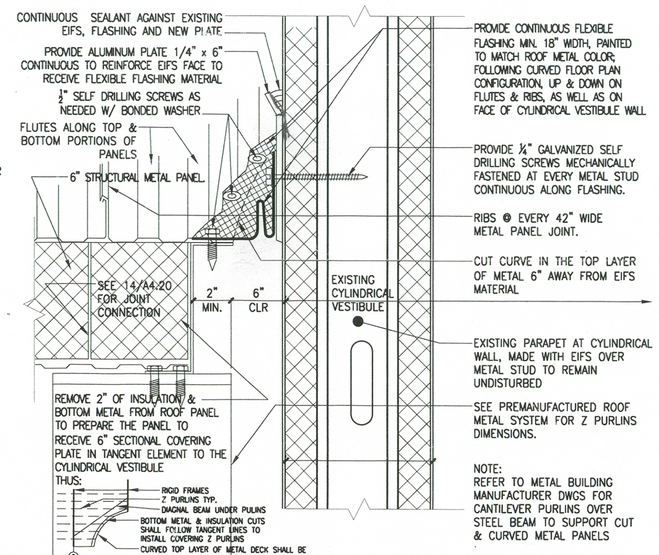

DETAIL 19
3"= 1'-0"

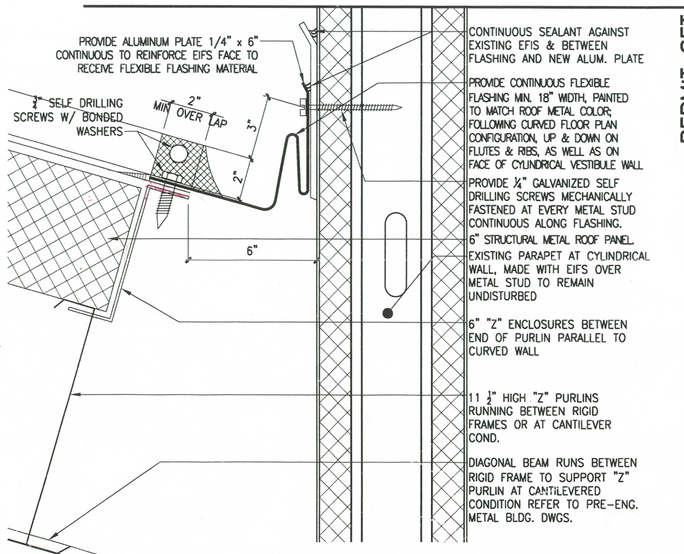

DETAIL 20
3"= 1'-0"
A8.30-20

REVISIONS

CONSULTANT

SH ARCHITECTURE
7371 Peak Drive Suite 250 Las Vegas, Nevada 89128
ph 702.363.2222 fax 702.363.6060 www.sh-architecture.com

CITY OF LAS VEGAS
PAVILION POOL COVER
101 SOUTH PAVILION CENTER DRIVE
LAS VEGAS, NEVADA 89144

DETAILS

PERMIT SET

STAMP
CURT JOHN CARLSON
REGISTERED
No. 8443
ARCHITECT
STATE OF NEVADA
MAR 2 6 2009

OWNER: CITY OF LAS VEGAS
DEPARTMENT OF PUBLIC WORKS
ARCHITECTURAL SERVICES

400 EAST STEWART AVENUE
LAS VEGAS, NEVADA 89101
PHONE: (702) 229-6535
FAX: (702) 384-4846
TDD: (702) 386-9108

DRAWN	MAP/JW
FILE	A8.30
DATE	03-26-09
SCALE	3"=1'-0"
BID NO	07-15341.05
CLV DWG NO	107V3596-2
SHEET NO	A8.30

REVISED 8/7/09

DRAWINGS AS INSTRUMENTS OF SERVICE ARE THE PROPERTY OF THE DESIGN PROFESSIONAL WHOSE STAMP OF CERTIFICATION APPEARS ON THE DRAWINGS AND SPECIFICATIONS RETAINED BY THE CLIENT MAY BE UTILIZED ONLY FOR OCCUPYING THE PROJECT FOR WHICH THEY WERE PREPARED AND NOT FOR THE CONSTRUCTION OF ANY OTHER PROJECT N A G 623.780
THIS DRAWING IS THE PROPERTY OF THE ARCHITECT AND IS NOT TO BE USED IN WHOLE OR IN PART WITHOUT WRITTEN CONSENT IT IS STRICTLY PROHIBITED COPIES OF THE DRAWINGS AND SPECIFICATIONS AT ANY USE OR REPRODUCTION IN WHOLE OR IN PART WITHOUT WRITTEN CONSENT IS STRICTLY PROHIBITED

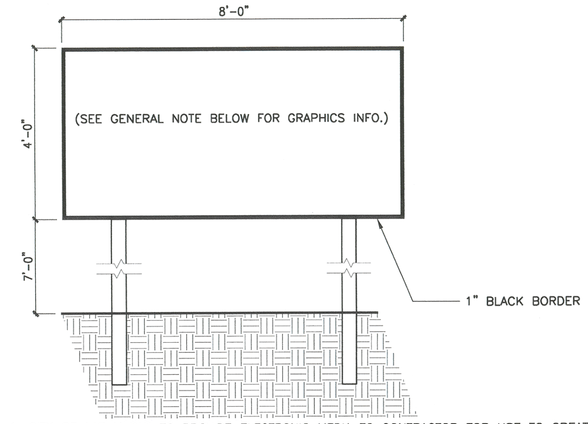

1. CITY OF LAS VEGAS TO PROVIDE ELECTRONIC MEDIA TO CONTRACTOR FOR USE TO CREATE PRINTED GRAPHICS. ADHERE TO PLYWOOD SUBSTRATE PER SPECIFICATIONS.

2. SIGN SHALL BE PLACE SO AS NOT TO OBSTRUCT VEHICULAR SIGHT LINES AND SHALL NOT OBSTRUCT AND PEDESTRIAN WAY.

3. FINAL SIGN LOCATIONS SHALL BE APPROVED BY THE OWNER'S REPRESENTATIVE PRIOR TO INSTALLATION

DETAIL 1
A4.20-15 1/2"=1'-0"

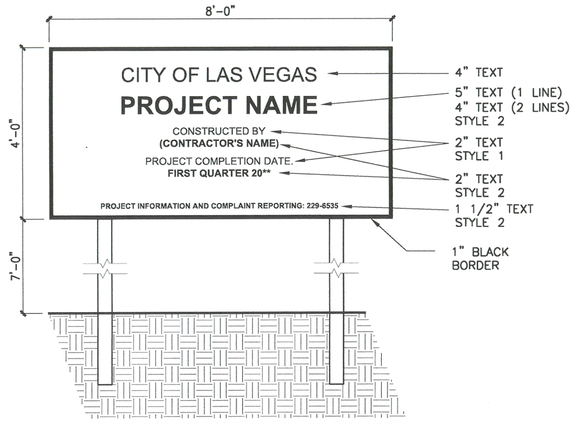

1. SIGN SHALL BE PAINTED WHITE WITH 1" BLACK BORDER

2. ALL SIGN LETTERING SHALL BE PAINTED BLACK.
STYLE 1 TO BE SWIS 721 LT EX. BT. (LIGHT)
STYLE 2 TO BE SWIS 721 BLACK EX. BT. (BOLD)

3. SIGN SHALL BE PLACED SO AS NOT TO COBSTRUCT VEHICULAR SIGHT LINES AND SHALL NOT OBSCURE AND PEDESTRIAN WAY.

4. FINAL SIGN LOCATIONS SHALL BE APPROVED BY THE OWNER'S REPRESENTATIVE PRIOR TO INSTALLATION.

DETAIL 2
A4.20-17 1/2"=1'-0"

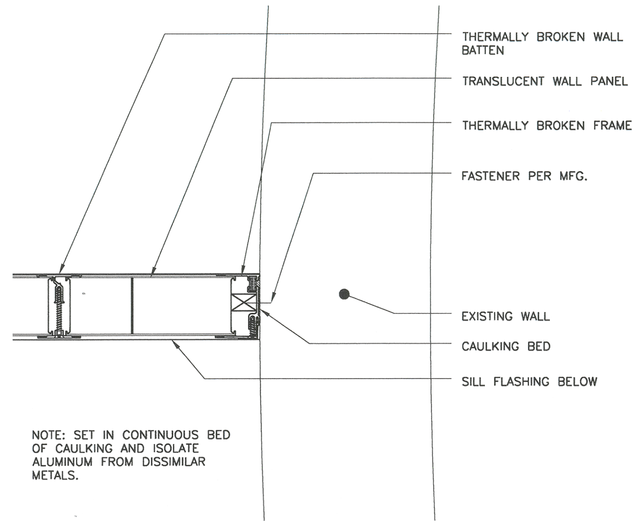

NOTE: SET IN CONTINUOUS BED OF CAULKING AND ISOLATE ALUMINUM FROM DISSIMILAR METALS.

DETAIL 3
3"=1'0"

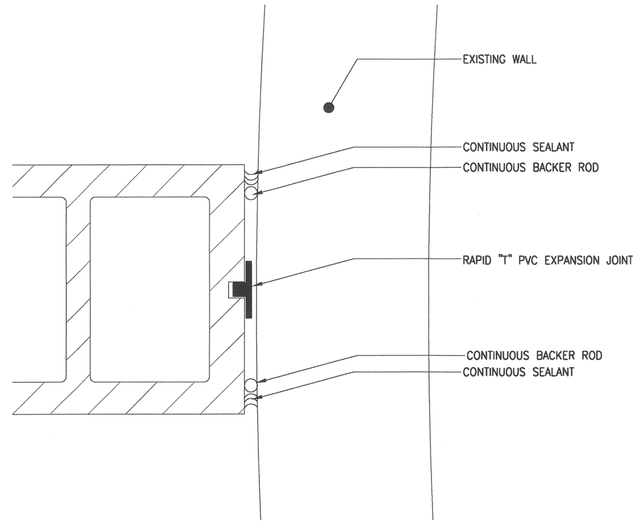

DETAIL 4
3"=1'0"

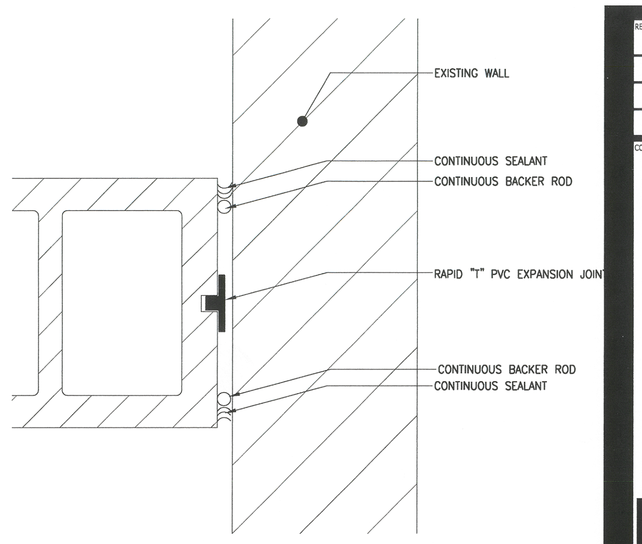

DETAIL 5
3"=1'0"

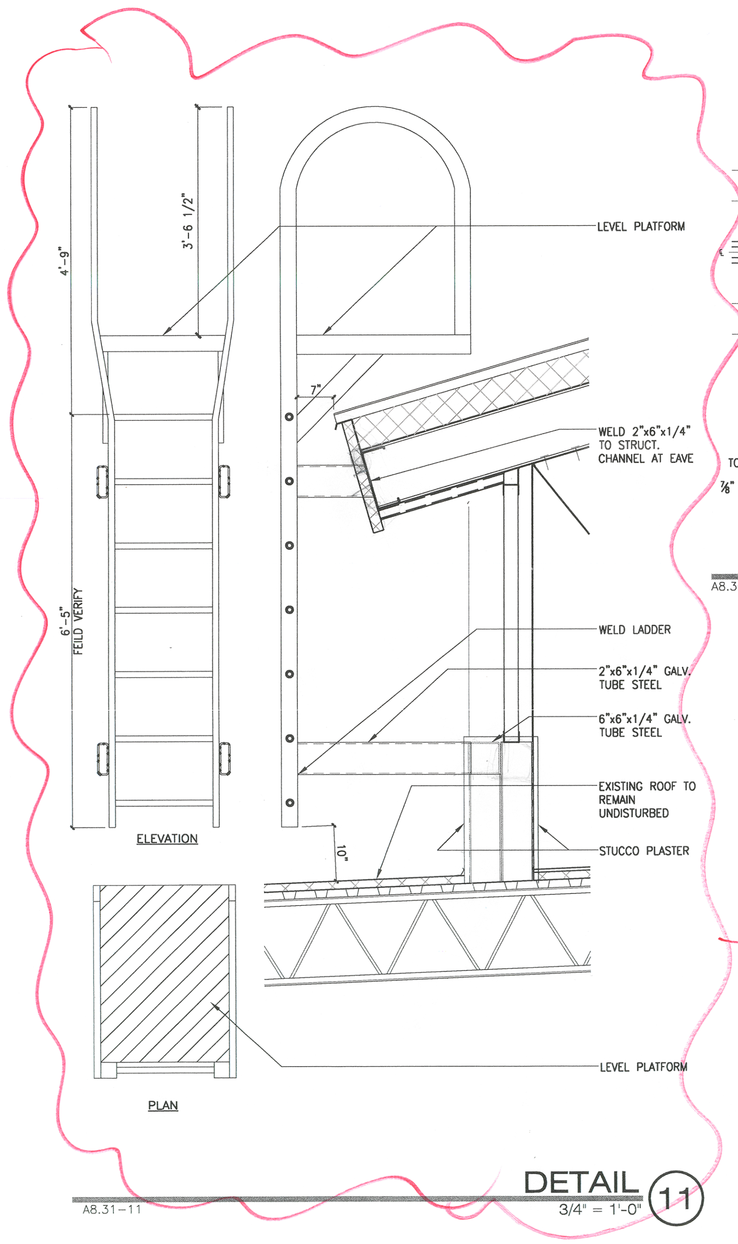

RFI

DETAIL 11
A8.31-11 3/4" = 1'-0"

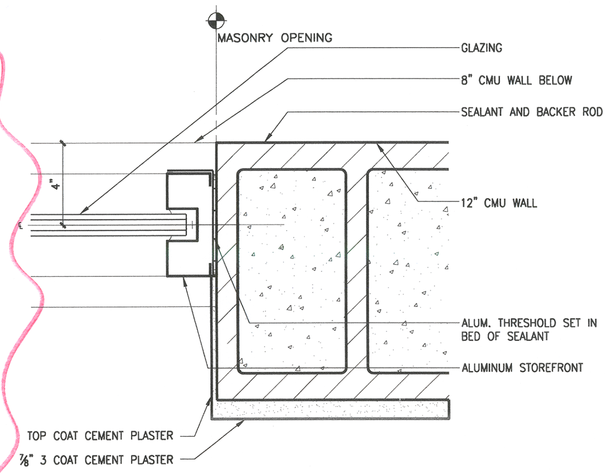

DETAIL 6
A8.30-8 3" = 1'-0"

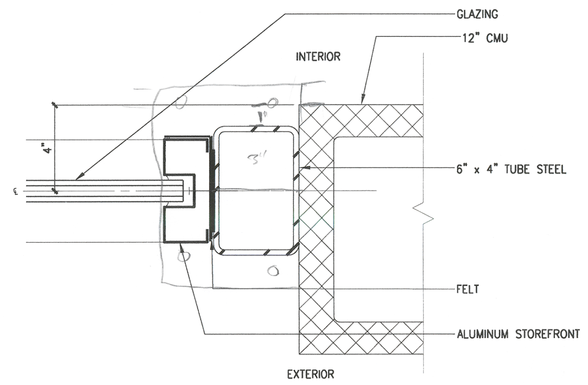

DETAIL 7
A8.31-7 3" = 1'-0"

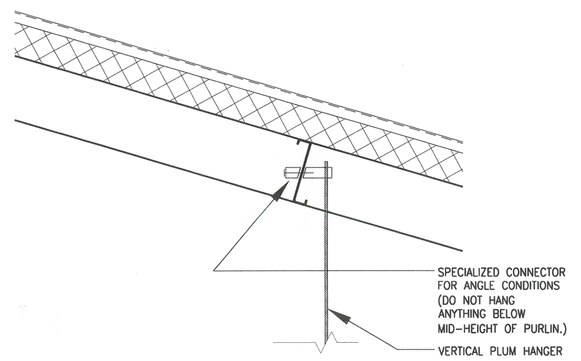

DETAIL 9
3/4"=1'-0"

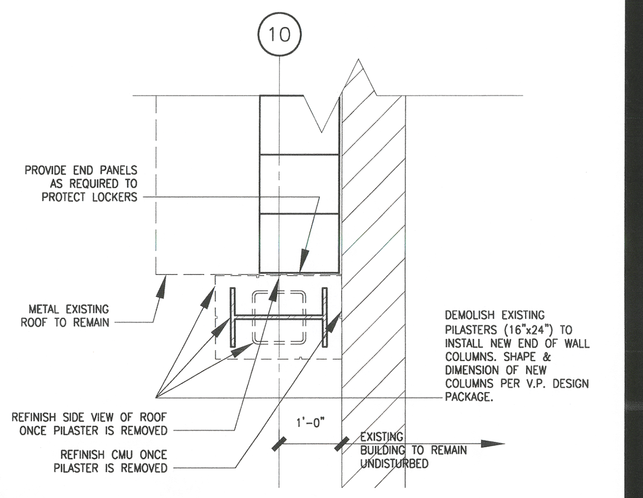

DETAIL 10
3/4"=1'-0"

PLANS APPROVED
ARCHITECTURAL
Building & Safety Dept.
Las Vegas, Nevada

CJW APR 21 2009

Does Not Include Electrical, Plumbing, Mechanical, Structural or Landscape Improvements. Refer to Structural Plans for Wall Bracing and Plan Check Not a Permit to Violate Any Ordinance

PERMIT SET

SH ARCHITECTURE
7373 Peak Drive Suite 250 Las Vegas Nevada 89128
ph 702.363.2222 fax 702.363.6060 www.sh-architecture.com

DIVISIONS

CONSULTANT

CITY OF LAS VEGAS
PAVILION POOL COVER
101 SOUTH PAVILION CENTER DRIVE
LAS VEGAS, NEVADA 89144

DETAILS

STAMP
CURT JOHN CARLSON
REGISTERED
No. 3443
ARCHITECT
STATE OF NEVADA
MAR 26 2009

OWNER: CITY OF LAS VEGAS
DEPARTMENT OF PUBLIC WORKS
ARCHITECTURAL SERVICES

400 EAST STEWART AVENUE
LAS VEGAS, NEVADA 89101
PHONE: (702) 229-6535
FAX: (702) 384-4846
TDD: (702) 386-9108

DRAWN	MAP/JW
TITLE	A8.31
DATE	03-26-09
SCALE	3"=1'-0"
BID NO	07-15341.05
CLV DWG NO	107V3596-2
SHT NO	A8.31

REVISED: 6/27/03

DRAWINGS AS INSTRUMENTS OF SERVICE ARE THE PROPERTY OF THE DESIGN PROFESSIONAL WHOSE STAMP OF CERTIFICATION APPEARS ON THE DRAWINGS AND SPECIFICATIONS RETAINED BY THE CLIENT MAY BE UTILIZED ONLY FOR OCCUPYING THE PROJECT FOR WHICH THEY WERE PREPARED AND NOT FOR THE CONSTRUCTION OF ANY OTHER PROJECT N. A. 3.23.1787
PRODUCT WRITTEN CONSENT IS STRICTLY PROHIBITED COPIES OF THE DRAWINGS AND SPECIFICATIONS ANY USE OR REPRODUCTION IN WHOLE OR IN PART WITHOUT WRITTEN CONSENT