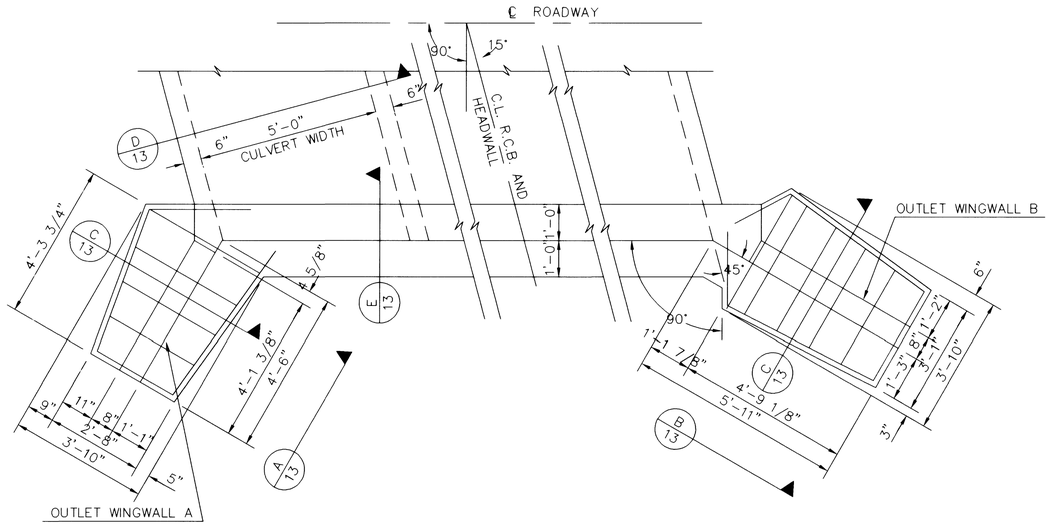

15° SKEWED WINGWALL PLAN FOR (5) 5'Wx4'H RCB'S (1/13)

SCALE: 1"=2'

(SEE SHEET 7)

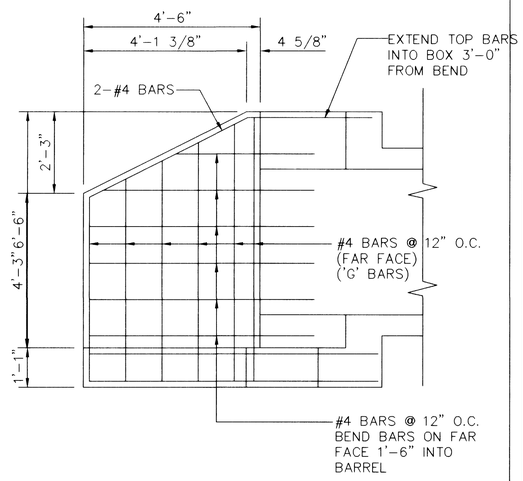

WINGWALL "A" VIEW (A/13)

SCALE: 1"=2'

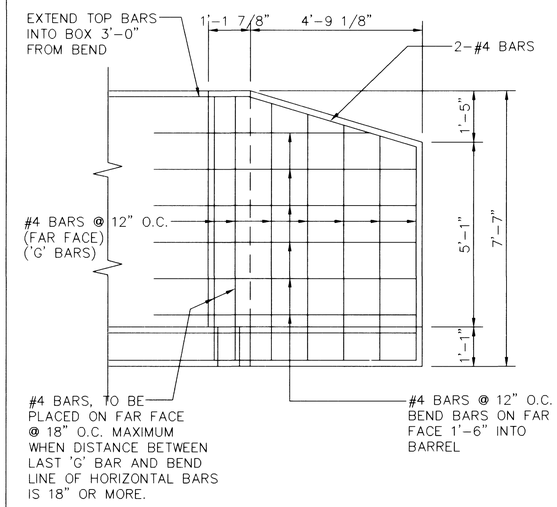

WINGWALL "B" VIEW (B/13)

SCALE: 1"=2'

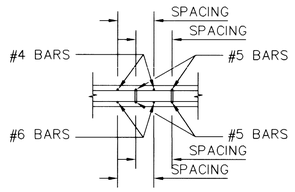

ROOF SECTION

SCALE: 1"=4'

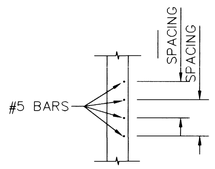

EXTERIOR WALL SECTION

NOT TO SCALE

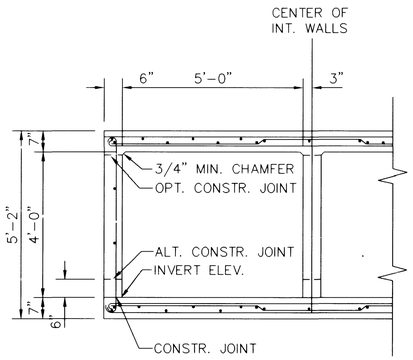

TYPICAL SECTION-5' SPAN (D/13)

SCALE: 1"=2'

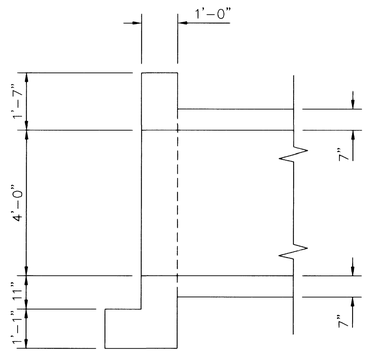

SECTION (E/13)

SCALE: 1"=2'

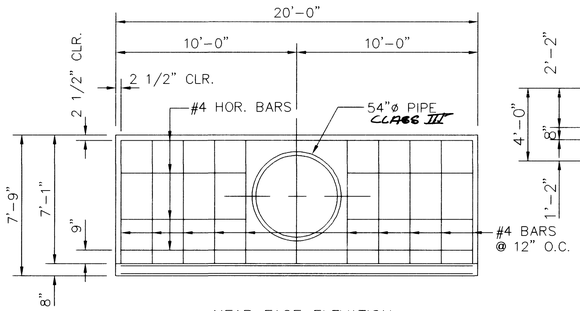

NEAR FACE ELEVATION

SCALE: 1"=4'

(FACING EXTERIOR)

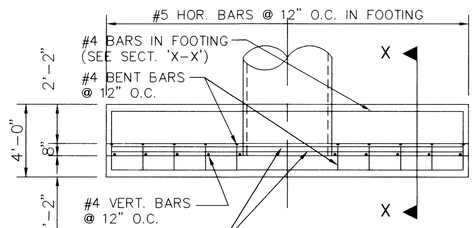

PLAN

SCALE: 1"=4'

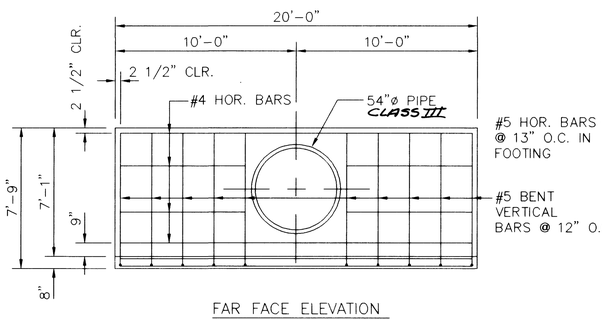

FAR FACE ELEVATION

SCALE: 1"=4'

(FACING INTERIOR)

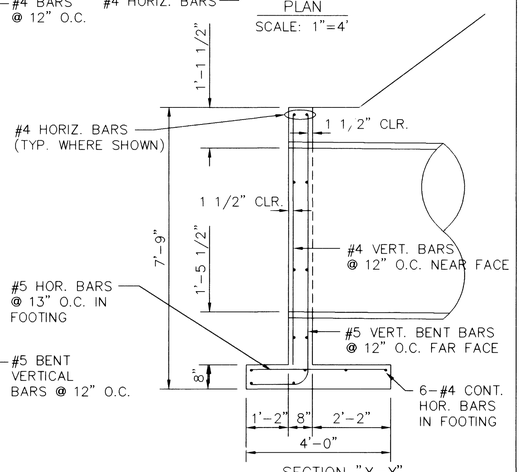

SECTION "X-X"

SCALE: 1"=2'

HEADWALL (F/13)

SCALE: AS SHOWN

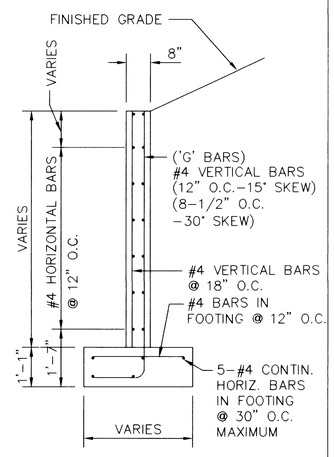

WINGWALL TYPICAL SECTION (C/13)

NOT TO SCALE

NO.	DESCRIPTION	DATE	APP'D

RECOMMENDED: Daniel Lafurbio 7/2/96
DANIEL LaFURBIO, JR. P. E. # 6985 DATE

DATE: 6/24/96
DRAWN BY:
DESIGNED BY:
CHECKED BY:
JOB NO.: 0145.0025
SCALE: AS SHOWN

PENTACORE
CIVIL ENGINEERING • LAND SURVEYING • PLANNING
CONSTRUCTION MANAGEMENT • ROAD CONSULTING
2763 WEST CHARLESTON BOULEVARD
LAS VEGAS, NEVADA 89102 (702)258-0115

PECCOLE NEVADA CORP.
PECCOLE WEST - PHASE II
DETAIL SHEET

SHEET 13 OF 15

PLOTTED:
24152

ST-DTL

Q:\0145\0025\ST-DTL Tue Jul 2 09:54:34 1996 Dwayne

107-V2524